FINAL ENVIRONMENTAL IMPACT REPORT FOR VICTOR VALLEY WASTEWATER RECLAMATION AUTHORITY, TOWN OF APPLE VALLEY WRP, CITY OF HESPERIA WRP, AND RELATED FACILITIES

Project Proponent and CEQA Lead Agency:
Victor Valley Wastewater Reclamation Authority
15776 Main Street, Suite 3
Hesperia, California 92345
(760) 948-9849

Preparer:
Tom Dodson & Associates
2150 North Arrowhead Avenue
San Bernardino, California 92405
(909) 882-3612

January 2011

TABLE OF CONTENTS

Notice of Determination

Transmittal Memorandum

Responses to Comments

Mitigation Monitoring and Reporting Program – DEIR

Mitigation Monitoring and Reporting Program – Initial Study

Draft Environmental Impact Report

CONFORMED COPY OF
NOTICE OF DETERMINATION

CLERK OF THE BOARD
FEB 22 2011
COUNTY OF
SAN BERNARDINO
REC # 408612

Notice of Determination

To: ✔ San Bernardino County
Clerk of the Board
385 North Arrowhead Avenue
San Bernardino, CA 92415

and

✔ Office of Planning and Research
State Clearinghouse
1400 Tenth Street
Sacramento, CA 95814

From: Victor Valley Wastewater Reclamation Authority (VVWRA)
15776 Main Street, Suite 3
Hesperia, CA 92345

Subject: Filing of Notice of Determination in compliance with Section 21108 or 21152 of the Public Resources Code.

VVWRA: Town of Apple Valley Wastewater Reclamation Plant, City of Hesperia Wastewater Reclamation Plant, and Related Facilities
Project Title

SCH#2010051087	Mr. Logan Olds	(760) 948-9849
State Clearinghouse Number	**Lead Agency Contact Person**	**Area Code/Telephone/Ext**

Project Location: Town of Apple Valley and City of Hesperia, San Bernardino County, California. The proposed Town of Apple Valley WRP would be located on the north side of Otoe Road, just east of Quantico Road at the southwest corner of Brewster Park in the Town of Apple Valley at an elevation of approximately 2,909 feet above mean sea level. The cadastral locations of the Town of Apple Valley WRP facilities are: WRP, Section 4, SW 1/4, T5N, R3W, San Bernardino Base Meridian (SBBM); Alternative 1 Percolation Site, Section 34, SW 1/4, T6N, R3W, SBBM; and Alternative 2 Percolation Site, Section 34, NW 1/4, T6N, R3W, SBBM. The City of Hesperia has proposed two alternative locations for its WRP. Alternative A is located west of I-15. The specific proposed location of the WRP is located north of Main Street, south of Yucca Terrace Drive, and west of Catawba Road, along a westward extension of Acacia Road. The cadastral location of this Alternative A WRP site is in Section 15, SE 1/4, T4N, R5W SBBM, which can be located on the USGS – Baldy Mesa Quadrangle, 7.5 Minute Series topographic map. The lift station proposed to serve both WRP alternatives occupies the same location. The proposed lift station site is located just west of Maple on the south side of Mojave Street, west of Tamarisk. The cadastral location of the proposed lift station is in Section 13, NW 1/4, T4N, R5W, SBBM.

Project Description: The proposed project consists of the construction and installation of the following components: a 1.0 MGD average flow Water Reclamation Plant in the Town of Apple Valley expandable to a 4.0 MGD Plant; a 1.0 MGD average flow Water Reclamation Plant in the City of Hesperia expandable to a 4.0 MGD Plant (the expansion would occur in the future when demand justifies such expansion at both WRPs); a lift station and force main to serve the proposed Hesperia WRP; modification of a lift station to serve the proposed Apple Valley WRP; and recycled water distribution infrastructure and disposal percolation ponds to serve each WRP. The wastewater will be treated to meet highly restrictive Title 22 recycled water requirements and will be used for industrial and lanscape irrigation with excess recycled water disposed of in percolation ponds.

This is to advise that the Victor Valley Wastewater Reclamation Authority has approved the above described
■ Lead Agency ☐ Responsible Agency

project on February 17, 2011 and has made the following determination regarding the above described project:
(Date)

DATE FILED & POSTED

Notice of Determination, page 2 of 2

1. The project [□ will ■ will not] have a significant effect on the environment.
2. ■ An Environmental Impact Report was prepared for this project pursuant to the provisions of CEQA.
   □ A Mitigated Negative Declaration was prepared for this project pursuant to the provisions of CEQA.
3. Mitigation measures [■ were □ were not] made a condition of the approval of the project.
4. A Statement of Overriding Considerations [□ was ■ was not] adopted for this project.
5. Findings (■ were □ were not) made pursuant to the provisions of CEQA.

This is to certify that the Environmental Impact Report, comment, responses, and record of project approval are available to the General Public at:

Victor Valley Wastewater Reclamation Authority, 15776 Main Street, Suite 3, Hesperia, CA 92345

Signature	Title	Date
[illegible]	General Manager	18 Feb 2011

State of California—The Resources Agency
DEPARTMENT OF FISH AND GAME

2011 ENVIRONMENTAL FILING FEE CASH RECEIPT

RECEIPT # 408612

STATE CLEARING HOUSE # *(If applicable)*

SEE INSTRUCTIONS ON REVERSE. TYPE OR PRINT CLEARLY

LEAD AGENCY: VICTOR VALLEY WASTEWATER RECL. AUTH.

DATE: 2/22/11

COUNTY/STATE AGENCY OF FILING: SAN BERNARDINO, CA

DOCUMENT NUMBER:

PROJECT TITLE: VVWRA: TOWN OF APPLEVALLEY WRP; CITY OF HESPERIA WRP; RELATED

PROJECT APPLICANT NAME: VVWRA

PHONE NUMBER: 760 948-9849

PROJECT APPLICANT ADDRESS: 15776 MAIN ST. STE 3 | CITY: HESPERIA | STATE: CA | ZIP CODE: 92345

PROJECT APPLICANT *(Check appropriate box)*:

- [x] Local Public Agency
- [ ] School District
- [ ] Other Special District
- [ ] State Agency
- [ ] Private Entity

CHECK APPLICABLE FEES:

[x] Environmental Impact Report (EIR)	$2,839.25	$ 2839.25
[ ] Mitigated/Negative Declaration (ND)(MND)	$2,044.00	$
[ ] Application Fee Water Diversion *(State Water Resources Control Board Only)*	$850.00	$
[ ] Projects Subject to Certified Regulatory Programs (CRP)	$965.50	$
[x] County Administrative Fee	$50.00	$ 50.00
[ ] Project that is exempt from fees		
[ ] Notice of Exemption		
[ ] DFG No Effect Determination (Form Attached)		
[ ] Other		$

PAYMENT METHOD:

- [ ] Cash
- [ ] Credit
- [x] Check 6190
- [ ] Other

TOTAL RECEIVED $ 2889.25

SIGNATURE: x Marisela Aguirre

TITLE: Deputy Clerk

WHITE - PROJECT APPLICANT | YELLOW - DFG/ASB | PINK - LEAD AGENCY | GOLDEN ROD - COUNTY CLERK | FG 753.5a (Rev. 11/10)

RESPONSES TO COMMENTS

TOM DODSON & ASSOCIATES
2150 N. ARROWHEAD AVENUE
SAN BERNARDINO, CA 92405
TEL (909) 882-3612 • FAX (909) 882-7015
E-MAIL tda@tdaenv.com

MEMORANDUM

January 14, 2011

From: Tom Dodson

To: Logan Olds, General Manager

Subj: Completion of the Final Environmental Impact Report for the Victor Valley Wastewater Reclamation Authority, Town of Apple Valley Wastewater Reclamation Plant, City of Hesperia Wastewater Reclamation Plant, and Related Facilities (SCH# 2010051087)

The Victor Valley Wastewater Reclamation Authority (VVWRA or Authority)) distributed the Town of Apple Valley Wastewater Reclamation Plant (WRP), City of Hesperia Wastewater Reclamation Plant, and Related Facilities Program Environmental Impact Report (PEIR) for pubic review with the review starting on November 10, 2010 and ending on December 27, 2010. The Authority received six comment letters on this project and these letters are attached along with responses to each of the comments raised. The contents of a Final EIR are defined in Section 15132 of the State California Environmental Quality Act (CEQA) Guidelines and include the following requirements: the Draft EIR; comments and recommendations received on the Draft; a list of parties commenting of the Draft EIR; responses to comments by the CEQA Lead Agency (VVWRA); a mitigation monitoring and reporting program; a set of facts, findings and statement of overriding considerations (SOOC, where required); and any other information added by the Lead Agency as part of its decision-making process for a project. Because this PEIR did not identify any significant adverse impacts that could not be mitigated, a SOOC will <u>not</u> be required as part of the decision-making package before the Final PEIR can be certified. This memorandum and the attached responses to comments contained herein constitute a portion of the Final PEIR for the Town and City WRP Program.

The following agencies and parties submitted written comments, which are addressed in the attached responses to comments attachment.

1. Governor's Office of Planning and Research, State Clearinghouse and Planning Unit (2)
2. California Regional Water Quality Control Board, Lahontan Region
3. Native American Heritage Commission
4. California Department of Transportation, Division of Aeronautics
5. Apple Valley Ranchos Water Company
6. San Bernardino County Public and Support Services Group, Department of Airports

This memorandum, combined with the Draft PEIR, the above list of commenters, the attached comment letters and responses, the Mitigation Monitoring and Reporting Program, and other staff materials in the final administrative record constitute the Final PEIR for the Town of Apple Valley WRP, City of Hesperia WRP and Related Facilities Program. The VVWRA Board meeting will be held on January 27, 2011 at 2:30 p.m. or thereafter. The meeting will be held at the VVWRA Administrative Offices located at 15776 Main Street, Suit 3, Hesperia, CA 92345.

After review and response to all of the comments, the Final PEIR identifies the same potential significant adverse impacts as were forecast in the Draft PEIR. After taking into consideration the comments submitted by the above parties, the data and analysis continue to indicate that no significant impact to the environment, may result from implementing the proposed project. The data in the Final PEIR support a finding that all potential adverse impacts are either less than significant without mitigation, or are less than significant with implementation of the identified mitigation measures. This finding is consistent with that identified in the Draft PEIR. No recirculation of the Draft PEIR will be necessary. The Final PEIR package is now ready for consideration and certification by the VVWRA Board of Directors.

Do not hesitate to give me a call if you have any questions regarding the enclosed material.

Tom Dodson

Tom Dodson
Attachments

COMMENT LETTER #1

STATE OF CALIFORNIA

Governor's Office of Planning and Research

State Clearinghouse and Planning Unit

Arnold Schwarzenegger
Governor

Cathleen Cox
Acting Director

December 27, 2010

RECEIVED
DEC 29 2010
VVWRA

Logan Olds
Victor Valley Wastewater Reclamation Authority
15776 Main Street, Suite 3
Hesperia, CA 92345

Subject: Town of Apple Valley Wastewater Reclamation Plant, City of Hesperia Wastewater Reclamation Plant, and Related
SCH#: 2010051087

Dear Logan Olds:

The State Clearinghouse submitted the above named Draft EIR to selected state agencies for review. On the enclosed Document Details Report please note that the Clearinghouse has listed the state agencies that reviewed your document. The review period closed on December 24, 2010, and the comments from the responding agency (ies) is (are) enclosed. If this comment package is not in order, please notify the State Clearinghouse immediately. Please refer to the project's ten-digit State Clearinghouse number in future correspondence so that we may respond promptly.

Please note that Section 21104(c) of the California Public Resources Code states that:

> "A responsible or other public agency shall only make substantive comments regarding those activities involved in a project which are within an area of expertise of the agency or which are required to be carried out or approved by the agency. Those comments shall be supported by specific documentation."

These comments are forwarded for use in preparing your final environmental document. Should you need more information or clarification of the enclosed comments, we recommend that you contact the commenting agency directly.

This letter acknowledges that you have complied with the State Clearinghouse review requirements for draft environmental documents, pursuant to the California Environmental Quality Act. Please contact the State Clearinghouse at (916) 445-0613 if you have any questions regarding the environmental review process.

Sincerely,

Scott Morgan
Director, State Clearinghouse

Enclosures
cc: Resources Agency

1400 TENTH STREET P.O. BOX 3044 SACRAMENTO, CALIFORNIA 95812-3044
TEL (916) 445-0613 FAX (916) 823-3018 www.opr.ca.gov

RESPONSES TO COMMENTS
LETTER #1
GOVERNORS OFFICE OF PLANNING AND RESEARCH
STATE CLEARINGHOUSE AND PLANNING UNIT

1-1 This is an acknowledgment letter verifying that the State Clearinghouse submitted the Draft EIR to selected state agencies for review, and that one state agency submitted comments through the Clearinghouse by the close of the review period, which occurred on December 24, 2010. The State Clearinghouse submitted a second letter (on January 4, 2011) indicating that a second comment letter had been received and provided this document for review and comment if the Authority chooses to do so. The State assigned this project the following tracking number, SCH #2010051087. The responses to these comment letters are provided in the following response to comment. The Clearinghouse letter is for information only and does not require a formal response.

Document Details Report
State Clearinghouse Data Base

SCH# 2010051087
Project Title Town of Apple Valley Wastewater Reclamation Plant, City of Hesperia Wastewater Reclamation Plant, and Related
Lead Agency Victor Valley Wastewater Reclamation Authority

Type EIR Draft EIR

Description The proposed project consists of the consists of the construction and installation of the following components: 1.0 MGD average flow Water Reclamation Plant in the Town of Apple Valley expandable to a 4.0 MGD Plant; a 1.0 MGD average flow Water Reclamation Plant in the City of Hesperia expandable to a 4.0 MGD Plant (the expansion would occur in the future when demand justifies such expansion at both WRPs); a lift station and force main to serve the proposed Hesperia WRP; modification of a lift station to serve the proposed Apple Valley WRP; and recycled water distribution infrastructure and disposal percolation ponds to serve each WRP. The wastewater will be treated to meet highly Title 22 recycled water requirements and will be used for industrial and landscape irrigation with excess recycled water disposed of in percolation ponds.

Lead Agency Contact

Name Logan Olds
Agency Victor Valley Wastewater Reclamation Authority
Phone 760-948-9849 **Fax**
email
Address 15776 Main Street, Suite 3
City Hesperia **State** CA **Zip** 92345

Project Location

County San Bernardino
City Apple Valley, Hesperia
Region
Lat / Long 34° 28' 15" N / 117° 15' 25" W
Cross Streets Bear Valley Road / Hesperia Road / I-15
Parcel No.
Township 4-6N **Range** 3,4W **Section** many **Base** SBB&M

Proximity to:

Highways I-15
Airports Apple Valley Airport
Railways BNSF
Waterways Mojave River
Schools several
Land Use

Project Issues Air Quality; Archaeologic-Historic; Biological Resources; Drainage/Absorption; Flood Plain/Flooding; Noise; Population/Housing Balance; Soil Erosion/Compaction/Grading; Vegetation; Water Quality; Wetland/Riparian; Wildlife; Growth Inducing

---

Reviewing Agencies Resources Agency; Department of Fish and Game, Region 6; Office of Historic Preservation; Department of Parks and Recreation; Department of Water Resources; Caltrans, Division of Aeronautics; Caltrans, District 8; State Water Resources Control Board, Divison of Financial Assistance; Regional Water Quality Control Bd., Region 6 (Victorville); Native American Heritage Commission; Public Utilities Commission; CA Department of Public Health

---

Date Received 11/10/2010 **Start of Review** 11/10/2010 **End of Review** 12/24/2010

Note: Blanks in data fields result from insufficient information provided by lead agency.

STATE OF CALIFORNIA

GOVERNOR'S OFFICE *of* PLANNING AND RESEARCH

STATE CLEARINGHOUSE AND PLANNING UNIT

JERRY BROWN
GOVERNOR

RECEIVED
JAN 06 2011
VVWRA

January 4, 2011

Logan Olds
Victor Valley Wastewater Reclamation Authority
15776 Main Street, Suite 3
Hesperia, CA 92345

Subject: Town of Apple Valley Wastewater Reclamation Plant, City of Hesperia Wastewater Reclamation Plant, and Related
SCH#: 2010051087

Dear Logan Olds:

The enclosed comment (s) on your Draft EIR was (were) received by the State Clearinghouse after the end of the state review period, which closed on December 24, 2010. We are forwarding these comments to you because they provide information or raise issues that should be addressed in your final environmental document.

The California Environmental Quality Act does not require Lead Agencies to respond to late comments. However, we encourage you to incorporate these additional comments into your final environmental document and to consider them prior to taking final action on the proposed project.

Please contact the State Clearinghouse at (916) 445-0613 if you have any questions concerning the environmental review process. If you have a question regarding the above-named project, please refer to the ten-digit State Clearinghouse number (2010051087) when contacting this office.

Sincerely,

Scott Morgan
Director, State Clearinghouse

Enclosures
cc: Resources Agency

1400 10th Street P.O. Box 3044 Sacramento, California 95812-3044
(916) 445-0613 FAX (916) 323-3018 www.opr.ca.gov

COMMENT LETTER #2

California Regional Water Quality Control Board
Lahontan Region

Linda S. Adams
Secretary for Environmental Protection

Victorville Office
14440 Civic Drive, Suite 200, Victorville, California 92392
(760) 241-6583 • Fax (760) 241-7308
http://www.waterboards.ca.gov/lahontan

Arnold Schwarzenegger
Governor

December 27, 2010

RECEIVED
JAN 03 2011
VVWRA

Logan Olds, General Manager
Victor Valley Wastewater Reclamation Authority
15776 Main Street, Suite 3
Hesperia, CA 92345

RESPONSE TO THE DRAFT ENVIRONMENTAL IMPACT REPORT, VICTOR VALLEY WASTEWATER RECLAMATION AUTHORITY RECLAMATION FACILITIES PROJECT, STATE CLEARINGHOUSE NO. 2010051087, SAN BERNARDINO COUNTY

The California Regional Water Quality Control Board, Lahontan Region (Water Board) staff received the Draft Environmental Impact Report (DEIR) prepared by your consultant, Tom Dodson and Associates, for the Wastewater Reclamation Plant project proposed by VVWRA. Water Board staff has reviewed the report and has the following comments.

Project Description

2-1 VVWRA is proposing a project to construct two new sewage treatment plants (Facilities), which would be located in Apple Valley and the City of Hesperia. A third facility may be constructed at a later time but is not part of the proposed project evaluated. Each Facility will be designed to treat 1.0 million gallons per day (mgd) average flow with possible expansion to 4.0 mgd. The project includes associated infrastructure to collect raw wastewater and distribute the recycled water produced. The DEIR states that recycled water generated by the project would be used mainly for landscape irrigation and for industrial uses. Whenever the irrigation demand is low, any excess recycled water will be delivered to percolation ponds. A percolation pond site would be associated with each Facility and would be designed to have capacity to dispose of all recycled water generated by that Facility. It is anticipated that construction completion and startup operation of the Apple Valley and Hesperia sub-regional plants will occur in years 2012 or 2013.

Comments

2-2 1. The DEIR states that, in addition to monitoring, VVWRA will also use models to forecast future total dissolved solids (TDS) and nitrate concentrations in groundwater as a result of the project. The DEIR does not mention any mitigation measures to address future increases in nitrate and salinity, which are expected to occur in groundwaters as a result of the project.

RESPONSES TO COMMENTS
LETTER #2
CALIFORNIA REGIONAL WATER QUALITY CONTROL BOARD
LAHONTAN REGION
DEPARTMENT OF PUBLIC WORKS, FLOOD CONTROL DISTRICT

2-1 Your comment is noted and the information will be provided to the Authority Board prior to making a final decision on the project.

2-2 Actually, contingency mitigation measure 4.5-6 does not stop with monitoring efforts. This contingency measure requires actions to be initiated if the future modeling indicates a deviation from the concentrations modeled in the PEIR. The specific actions to be taken would be selected at that point in the future, but the performance requirement of the mitigation measure is to initiate all actions required to prevent project discharges to contribute to a cumulative violation of 2005 Basin Plan objectives. At this stage of review and based on the data which indicate the proposed project will not cause significant groundwater degradation, VVWRA concludes that this contingency measure is adequate and protective of groundwater quality in the region.

2-3 cont. The proposed treatment plant design standard is 8 mg/L total nitrogen, with capability to upgrade later to produce effluent with lower total nitrogen concentrations. The background groundwater concentrations for the closest wells presented in the DEIR show nitrate concentrations for the Apple Valley and Hesperia proposed percolation pond sites at 0.2 and 0.5, respectively. The DEIR does not provide sufficient justification as to why lower total nitrogen concentrations are not feasible to achieve in the treated effluent discharged for percolation. The DEIR needs to further discuss the alternatives available to reduce effluent total nitrogen concentrations, including the economic and technical feasibility of implementing those alternatives.

2-4 2. The DEIR mentions that a Salt and Nutrient Management Plan will be developed in the future to address potential impacts to the water quality within the groundwater basin. The DEIR does not state how this addresses identified impacts and if it is considered to be a mitigation measure. Please discuss further alternatives and control measures available for use of the recycled water and identify any mitigation measures.

Thank you for the opportunity to review and comment on the report. If you should have any questions regarding these comments, please contact me at (760) 241-7366 or Cindi Mitton, P.E. at (760) 241-7413.

Sincerely,

for C. Mitton

John Morales, P.E.
Water Resources Control Engineer

cc: Kirby Brill, Gen Mgr, Mojave Water Agency
Tom Dodson, Tom Dodson & Assoc.
State Clearinghouse

JM/rc/U:/VVWRA/Response letter to the DEIR 12 10 10

2-3 Your comment is noted and the information will be provided to the Authority Board prior to making a final decision on the project. The detailed data are provided in the Draft Cumulative Impact Analysis (CIA) and in Chapter 4.5 of the PEIR. Based on these detailed analyses, VVWRA concluded that, although some limited degradation of water quality would occur, no standards will be violated. The Authority has concluded that on balance, the use of reverse osmosis or an alternative to further reduce nitrate concentrations is not justified based on these data. VVWRA believes this analysis is sufficient for the findings reached in the PEIR. As part of its review of the WRPs or Recycled Water Master Plan in the future, this issue can be re-evaluated by the Regional Board.

2-4 The Salt and Nutrient Management Plan discussed in the PEIR is not intended as a mitigation measure for the WRPs. The review of salt additions through the use of recycled water for irrigation and some possible percolation through discharge to the proposed basins did not indicate the project would cause significant salt loadings, individually or cumulatively, based on the data and modeling provided in the PEIR. However, the Regional Board has indicated a desire to examine salt and nutrient management within the Alto Subbasin at a more detailed level. The discussion in the text was to reinforce VVWRA's commitment to completing this study. Regardless, the data in the PEIR indicates that the proposed project will not cause a significant adverse impact on groundwater in the Alto Subbasin.

COMMENT LETTER #3

STATE OF CALIFORNIA — Arnold Schwarzenegger, Governor

NATIVE AMERICAN HERITAGE COMMISSION
915 CAPITOL MALL, ROOM 364
SACRAMENTO, CA 95814
(916) 653-6251
Fax (916) 657-5390
Web Site www.nahc.ca.gov
e-mail: ds_nahc@pacbell.net

Clear 12/24/10 e

RECEIVED DEC 16 2010 STATE CLEARING HOUSE

December 14, 2010

Mr. Logan Olds, General Manager
VVWRA
15776 Main Street, Suite 3
Hesperia, CA 92345

Re: SCH#2010051087; CEQA Notice of Completion; draft Environmental Impact Report (DEIR) for the **VVWRA Town of Apple Valley Wastewater Reclamation Plant and City of Hesperia Wastwater Reclamation Plant and Related Facilities;** located in the Town of Apple Valley and City of Hesperia; San Bernardino County, California

Dear Mr. Olds:

3-1 The Native American Heritage Commission (NAHC) is the state 'trustee agency' pursuant to Public Resources Code §21070 for the protection and preservation of California's Native American Cultural Resources. (Also see *Environmental Protection Information Center v. Johnson (1985) 170 Cal App. 3rd 604)*. The California Environmental Quality Act (CEQA - CA Public Resources Code §21000-21177, amendment effective 3/18/2010) requires that any project that causes a substantial adverse change in the significance of an historical resource, that includes archaeological resources, is a 'significant effect' requiring the preparation of an Environmental Impact Report (EIR) per the California Code of Regulations §15064.5(b)(c)(f) CEQA guidelines). Section 15382 of the CEQA Guidelines defines a significant impact on the environment as "a substantial, or potentially substantial, adverse change in any of physical conditions within an area affected by the proposed project, including ...objects of historic or aesthetic significance. The lead agency is required to assess whether the project will have an adverse impact on these resources within the 'area of potential effect (APE), and if so, to mitigate that effect. State law also addresses Native American Religious Expression in Public Resources Code §5097.9. The NAHC notes from a review of the Initial Study for the project that the State of California Native American Heritage Commission is not listed as a 'responsible' or trustee' agency with jurisdiction for this project. The State Historic Preservation Office is noted, but it has responsibility for applicable federal not state laws.

3-2 The Native American Heritage Commission did perform a Sacred Lands File (SLF) search in the NAHC SLF Inventory, established by the Legislature pursuant to Public Resources Code §5097.94(a) and Native American Cultural Resources **were NOT identified** within one-half mile of several of the Area of Potential Effect (APE). But, it is important to understand that the absence of archaeological, Native American cultural resources in an area does not indicate that they are not present, or will be present once ground-breaking activity begins. The NAHC recommends early consultation with Native American tribes in your area as the best way to avoid unanticipated discoveries once a project is underway and to learn of any sensitive cultural areas. Enclosed are the names of the culturally affiliated tribes and interested Native American individuals that the NAHC recommends as 'consulting parties,' for this purpose, that may have knowledge of the religious and cultural significance of the historic properties in the project area (e.g. APE). A Native American Tribe or Tribal Elder may be the only source of information about a cultural resource.. Also, the NAHC recommends that a Native American Monitor or Native

RESPONSES TO COMMENTS
LETTER #3
NATIVE AMERICAN HERITAGE COMMISSION

3-1 Your comment is noted and the information will be provided to the Authority Board prior to making a final decision on the project. With mitigation no significant adverse effects were identified for cultural resources from implementing the proposed projects. With regard to the Commission being a responsible or trustee agency, this is the first time this role has been mentioned in a comment. Mr. Dodson and VVWRA will observe this role by the Commission in future environmental documentation and provide appropriate notice to the NAHC as a responsible and trustee agency.

3-2 Your comment is noted and the information will be provided to the Authority Board prior to making a final decision on the project. The recommended consultation was completed in accordance with the procedure outlined in this comment and the data are included in the PEIR in Subchapter 4.4 and the supporting Cultural Resources Technical Study prepared by CRM TECH. As indicated above with implementation of mitigation measures, no significant adverse impacts were identified for historic, prehistoric or Native American resources or values.

3-2 cont. American culturally knowledgeable person be employed whenever a professional archaeologist is employed during the 'Initial Study' and in other phases of the environmental planning processes.

3-3 Furthermore the NAHC recommends that you contact the California Historic Resources Information System (CHRIS) of the Office of Historic Preservation (OHP), for information on recorded archaeological data. This information is available at the OHP Office in Sacramento (916) 445-7000.

3-4 Consultation with tribes and interested Native American tribes and interested Native American individuals, as consulting parties, on the attached NAHC list, should be conducted in compliance with the requirements of federal NEPA (42 U.S.C. 4321-43351) and Section 106 and 4(f) of federal NHPA (16 U.S.C. 470 [f])*et seq.),* 36 CFR Part 800.3, .4 & .5, the President's Council on Environmental Quality (CSQ; 42 U.S.C. 4371 *et seq.*) and NAGPRA (25 U.S.C. 3001-3013), as appropriate. The 1992 *Secretary of the Interior's Standards for the Treatment of Historic Properties* were revised so that they could be applied to all historic resource types included in the National Register of Historic Places and including *cultural landscapes.* Consultation with Native American communities is also a matter of environmental justice as defined by California Government Code §65040.12(e).

3-5 Lead agencies should consider avoidance, as defined in Section 15370 of the California Environmental Quality Act (CEQA) when significant cultural resources could be affected by a project. Also, Public Resources Code Section 5097.98 and Health & Safety Code Section 7050.5 provide for provisions for accidentally discovered archeological resources during construction and mandate the processes to be followed in the event of an accidental discovery of any human remains in a project location other than a 'dedicated cemetery'. Discussion of these should be included in your environmental documents, as appropriate.

3-6 The authority for the SLF record search of the NAHC Sacred Lands Inventory, established by the California Legislature, is California Public Resources Code §5097.94(a) and is exempt from the CA Public Records Act (c.f. California Government Code §6254.10). The results of the SLF search are confidential. However, Native Americans on the attached contact list are not prohibited from and may wish to reveal the nature of identified cultural resources/historic properties. Confidentiality of "historic properties of religious and cultural significance' may also be protected the under Section 304 of the NHPA or at the Secretary of the Interior' discretion if not eligible for listing on the National Register of Historic Places. The Secretary may also be advised by the federal Indian Religious Freedom Act (cf. 42 U.S.C, 1996) in issuing a decision on whether or not to disclose items of religious and/or cultural significance identified in or near the APE and possibly threatened by proposed project activity.

3-7 CEQA Guidelines, Section 15064.5(d) requires the lead agency to work with the Native Americans identified by this Commission if the initial Study identifies the presence or likely presence of Native American human remains within the APE. CEQA Guidelines provide for agreements with Native American, identified by the NAHC, to assure the appropriate and dignified treatment of Native American human remains and any associated grave liens. Although tribal consultation under the California Environmental Quality Act (CEQA; CA Public Resources Code Section 21000 – 21177) is 'advisory' rather than mandated, the NAHC does request 'lead agencies' to work with tribes and interested Native American individuals as 'consulting parties,' on the list provided by the NAHC in order that cultural resources will be protected. However, the 2006 SB 1059 the state enabling legislation to the Federal Energy

3-3 The CRM TECH study includes data from the CHRIS database as suggested. No recorded sites were located within the project area of potential effect (APE).

3-4 As noted in response to comment 3-1, Native American tribes of the region were consulted and no comments or issues were submitted in response to these queries.

3-5 At this time it does not appear that there are any cultural resources that require avoidance. Depending on whether subsurface cultural resources are accidentally exposed during construction, this project will not affect any cultural resources. If accidentally exposed, VVWRA will either avoid, if possible, or provide proper management, curation, and documentation if not.

3-6 Your comment is noted and the information will be provided to the Authority Board prior to making a final decision on the project.

3-7 Mitigation measure 4.4-2 requires any human remains that may be exposed to be managed as suggested in this comment.

Policy Act of 2005, does mandate tribal consultation for the 'electric transmission corridors. This is codified in the California Public Resources Code, Chapter 4.3, and §25330 to Division 15, requires consultation with California Native American tribes, and identifies both federally recognized and non-federally recognized on a list maintained by the NAHC

3-7 cont. Health and Safety Code §7050.5, Public Resources Code §5097.98 and Sec. §15064.5 (d) of the California Code of Regulations (CEQA Guidelines) mandate procedures to be followed, including that construction or excavation be stopped in the event of an accidental discovery of any human remains in a location other than a dedicated cemetery until the county coroner or medical examiner can determine whether the remains are those of a Native American. . Note that §7052 of the Health & Safety Code states that disturbance of Native American cemeteries is a felony.

Please feel free to contact me at (916) 653-6251 if you have any questions.

Sincerely,

Dave Singleton
Program Analyst

Attachment: List of Culturally Affiliated Native American Contacts

Cc: State Clearinghouse

COMMENT LETTER #4

APPLE VALLEY RANCHOS WATER CO.

P.O. BOX 7005
21760 OTTAWA ROAD
APPLE VALLEY, CA 92307
(760) 247-6484 • FAX (760) 247-1654

RECEIVED
DEC 29 2010
VVWRA

December 27, 2010

Mr. Logan Olds
Victor Valley Wastewater Reclamation Authority
15776 Main Street, Suite 3
Hesperia, CA 92345

Subject: **Town of Apple Valley Wastewater Reclamation Plant Draft Environmental Impact Report (DEIR)**

Dear Mr. Olds,

4-1 Apple Valley Ranchos Water Company (AVRWC) has completed our review of subject report. Although many of our concerns listed in our July 13, 2010 letter have been addressed, we still have some concerns with the DEIR. The DEIR should contain additional detail on the design and mitigation measures that VVWRA proposes to implement for the proposed Percolation Ponds and/or Aquifer Storage and Recovery Wells. AVRWC has significant water quality concerns that the proposed percolation and/or direct injection will have on the local aquifer. Also, AVRWC feels that if the Town or VVWRA distributes the reclaimed water to irrigation customers (Parks or Golf Course) that this is a clear duplication of service to our existing customers.

4-2 Details of the above concerns are listed in our July 13, 2010 letter. Please provide further details that address our above concerns. Thank you for the opportunity to comment on the DEIR for the proposed project and we look forward to continue to work with you on this important project.

Sincerely,

Reginald A. Lamson
Assistant General Manager
Apple Valley Ranchos Water Company

RESPONSES TO COMMENTS
LETTER #4
APPLE VALLEY RANCHOS WATER CO.

4-1 At this time the Authority is not considering installation of any Aquifer Storage or Recovery Wells. Prior to installation of such a facility, the site specific and regional aquifer effects would be evaluated in a second-tier environmental document for compliance with the CEQA. Regarding the percolation basins, specific data has been provided on the locations, volume and water quality effects based on the quality of recycled water proposed for delivery to future users or to the percolation basins. Specific mitigation measures are provided in the PEIR, measures 4.5-6 through 4.5-8. VVWRA concludes that these measures are sufficient to ensure that local and regional groundwater quality will not experience changes that rise to a level of significant adverse impact based on the 2005 Basin Plan water quality objectives. These findings are clearly supported by the finding in the Cumulative Impact Analysis prepared by Larry Walker & Associates. Regarding duplication of service, the Authority concludes that the WRPs will not duplicate service, but will implement regional water management objectives established through the Mojave Water Agency. Overall water resource management will benefit from implementing the proposed project.

4-2 Your comment is noted and the information will be provided to the Authority Board prior to making a final decision on the project. Please refer to response to comment 4-1. Additional details do not appear to be required to fully disclose the potential environmental effects of implement the two WRP projects.

COMMENT LETTER #5

ARNOLD SCHWARZENEGGER, Governor

DEPARTMENT OF TRANSPORTATION
DIVISION OF AERONAUTICS – M.S.#40
1120 N STREET
P. O. BOX 942874
SACRAMENTO, CA 94274-0001
PHONE (916) 654-4959
FAX (916) 653-9531
TTY 711

Flex your power! Be energy efficient!

November 24, 2010

Clear 12/24/10 l.

RECEIVED
DEC - 1 2010
STATE CLEARING HOUSE

Mr. Logan Olds
Victor Valley Wastewater Reclamation Authority
15776 Main Street, Suite 3
Hesperia, CA 92345

Dear Mr. Olds:

Re: Draft Environmental Impact Report for the Town of Apple Valley Wastewater Reclamation Project; SCH# 2010051087

The California Department of Transportation (Caltrans), Division of Aeronautics (Division), reviewed the above-referenced document with respect to airport-related noise and safety impacts and regional aviation land use planning issues pursuant to the California Environmental Quality Act (CEQA). The Division has technical expertise in the areas of airport operations safety and airport land use compatibility. We are a funding agency for airport projects and we have permit authority for public-use and special-use airports and heliports.

The proposal is for the installation of Water Reclamation Plants (WRP) in the Town of Apple Valley and the City of Hesperia; a lift station and force main to serve the Hesperia WRP; modification to the Apply Valley WRP lift station; and several percolation basins.

5-1 The Draft Environmental Impact Report states that "The County Division of Airports and Caltrans Division of Airports may be involved with a review of airport operation conflicts related to the Alternative 2 percolation basin site in the Town of Apple Valley due to proximity to the Apple Valley Airport." The Alternative 2 percolation basin site is located on Apple Valley Airport property, approximately 600 feet south of Runway 8-26.

Apple Valley Airport operates with an airport permit issued by the Division of Aeronautics. We are the primary State agency responsible for permitting airports and heliports and conducting the annual safety inspections for public-use airports in the state. Also, as part of Federal Aviation Administration (FAA) grant assurances, if an airport sponsor receives federal funds for an airport, it is required that use of land on, adjacent to or in the immediate vicinity of the airport be restricted to activities and purposes compatible with normal airport operations.

5-2 Land use practices, like the proposed percolation basin, which have the potential to attract or sustain hazardous wildlife populations on or near airports, can significantly increase the potential for wildlife-aircraft collisions. Wildlife habitat management and other land use strategies on and near airports are fundamental to reducing wildlife use of airports. Safe management of stormwater runoff on and near airports should be designed so as to discourage birds from using these facilities, particularly within airport approach and departure zones. The FAA recommends that landfills, wastewater treatment facilities, surface mining, wetlands and other uses that have the potential to attract wildlife, be restricted

RESPONSES TO COMMENTS
LETTER #5
CALIFORNIA DEPARTMENT OF TRANSPORTATION
DIVISION OF AERONAUTICS

5-1 Your comment is noted and the information will be provided to the Authority Board prior to making a final decision on the project.

5-2 Based on the comments provided in your letter, VVWRA will take the following actions. First, the alternative percolation basin located at the Apple Valley Airport boundary will be removed from further consideration. In addition, at the primary recharge basin location located about one mile south of the Airport, the following mitigation measure will be implemented: To prevent access to the recharge ponds, a combination of the following actions will be taken to minimize attracting or hosting bird wildlife: the ponds will be netted; flashers will be installed to scare birds; and other hazing techniques will be used (except noise systems) to control access and scare birds so as to prevent bird use of the recharge ponds.

in the vicinity of an airport. FAA Advisory Circular 150/5200-33B entitled "Hazardous Wildlife Attractants on or Near Airports" addresses these issues and is available at the FAA website http://wildlife-mitigation.tc.faa.gov/. The Advisory Circular recommends a separation distance of 5,000 feet between airports using piston-powered aircraft and any project or change in land use that could attract hazardous wildlife, such as open-air water storage facilities. For airports using turbine-powered aircraft, the FAA recommends a separation distance of 10,000 feet between an airport and a potential hazardous wildlife attractant. For projects that are located outside the 5,000/10,000-foot criteria but within five statute miles of the airport's air operations area, the FAA may review development plans, proposed land use changes, operational changes, or wetland mitigation plans to determine whether such changes in land use would create potential wildlife hazards to aircraft operations.

5-2 cont.

5-3 The applicant should also coordinate closely with Apple Valley Airport staff to ensure compatibility with future as well as existing airport operations.

5-4 The protection of airports from incompatible land use encroachment is vital to California's economic future. Apple Valley Airport is an economic asset that should be protected through effective airport land use compatibility planning and awareness. Although the need for compatible and safe land uses near airports is both a local and State issue, airport staff, airport land use commissions and airport land use compatibility plans are key to protecting an airport and the people residing and working in the vicinity of an airport. Consideration given to the issue of compatible land uses in the vicinity of an airport should help to relieve future conflicts between airports and their neighbors.

5-5 These comments reflect the areas of concern to the Division with respect to airport-related noise, safety, and regional land use planning issues. We advise you to contact our District 8 office concerning surface transportation issues.

Thank you for the opportunity to review and comment on this proposal. If you have any questions, please call me at (916) 654-5314 or by email at sandy.hesnard@dot.ca.gov.

Sincerely,

Original Signed by

SANDY HESNARD
Aviation Environmental Specialist

c: State Clearinghouse, Apple Valley Airport, USDA-Wildlife Services, FAA

5-3 Communications with the Apple Valley Airport staff have been established and VVWRA will coordinate the implementation of the whole WRP project, including recharge basins, with the staff.

5-4 Your comment is noted and the information will be provided to the Authority Board prior to making a final decision on the project.

5-5 Your comment is noted and the information will be provided to the Authority Board prior to making a final decision on the project.

COMMENT LETTER #6

DEPARTMENT OF AIRPORTS

COUNTY OF SAN BERNARDINO
PUBLIC AND SUPPORT
SERVICES GROUP

777 East Rialto Ave • San Bernardino, CA 92415-0831 • (909)387-8810 • Fax (909)387-8815
Apple Valley Airport - Baker Airport - Barstow/Daggett Airport - Chino Airport - Needles Airport - Twentynine Palms Airport

Mike N. Williams, A.A.E.
Director

December 20, 2010

Mr. Logan Olds, General Manager
Victor Valley Wastewater Reclamation Authority
15776 Main Street, Suite 3
Hesperia, CA 92345

Sent via US Mail and e-mail to lolds@vvwra.com

Subject: County of San Bernardino, Department of Airports Comments on November 2010 Draft Environmental Impact Report for the Victor Valley Wastewater Reclamation Authority: Town of Apple Valley Wastewater Reclamation Plant, City of Hesperia Wastewater Reclamation Plant, and Related Facilities

Dear Mr. Olds:

This letter is intended to provide comments from the County of San Bernardino, Department of Airports (Department) regarding the November 2010 Draft Environmental Impact Report (DEIR) for the Victor Valley Wastewater Reclamation Authority's proposed Town of Apple Valley Wastewater Reclamation Plant, City of Hesperia Wastewater Reclamation Plant, and Related Facilities Project. There are several components to the project; however, our comments are confined to an alternative location proposed for the Town of Apple Valley disposal percolation ponds.

Location of Alternative 2

6-1 The "Alternative 2" percolation pond location is located inside the property boundary of the Apple Valley Airport (Airport), which is under the jurisdiction of the County of San Bernardino and County Service Area 60 (CSA 60). Alternative 2 is located approximately 600 feet south of Runway 8-26. However, the DEIR is not consistent in describing the location of Alternative 2, also referred to as Alternative 4 in Section 1.6 of the DEIR. The DEIR Section 3.3.1 describes the location as: "north of Papago Road, east of Navajo Road, west of Temecula Road, centered just north of the intersection of Navajo Road and Carmel Road." The Airport location is not noted in the project description, but is first noted in Section 4.3.2, in the Environmental Impact Evaluation section. In Section 4.3.4.1 the location is noted as "adjacent to" the Airport when it is actually on Airport property. Later, in Section 4.4.3.2 the location is noted correctly as "within" the Airport. In Sections 4.6.1 and 4.7.3.2 the DEIR states the proposed ponds would be located on vacant lands "just south of" the Airport.

6-2 The USGS map in Figure 3-3 is quite outdated and does not show the second runway that was constructed in 1999. This results in the appearance that the ponds are further away than if accurate figures were used.

Board of Supervisors

GREGORY C. DEVEREAUX
County Administrative Officer

BRAD MITZELFELT — First District
JANICE RUTHERFORD — Second District
JOSIE GONZALES — Fifth District
NEIL DERRY — Third District
GARY C. OVITT — Fourth District

RESPONSES TO COMMENTS
LETTER #6
SAN BERNARDINO COUNTY
DEPARTMENT OF AIRPORTS

6-1 The anticipated Alternative 2 basin location envisioned by VVWRA would have been just south of the Airport boundary. The location shown on the map was general based on the location of the roadway. However, as indicated in responses to comment 5-2, this is now a moot issue. Based on potential conflict with the Airport, VVWRA will abandon this alternative percolation basin and proceed to implement the Alternative 1 basin.

6-2 It is not possible to modify a USGS Topographic Map as it is a published document that can only be updated or modified by the USGS. It is used solely to identify the location because it contains cadastral location data which other maps do not contain.

Biological Impacts

6-3 The DEIR Section 4.3 does not mention the attraction of migratory or local avian species to ponds, including wastewater ponds. Such wildlife in turn pose a potential hazard to air traffic traveling to and from the Airport. Flocks of birds would pose a particular hazard for air strikes, i.e., bird collisions with aircraft. There are mitigation measures that could be employed to deter birds from landing on the pond surface. However, this subject is not discussed in the DEIR. More detail on attraction of wildlife and impacts to air traffic is provided in the November 24, 2010 letter from the California Department of Transportation (Caltrans), Division of Aeronautics.

Feasible Alternatives

6-4 The California Environmental Quality Act (CEQA) and the State CEQA Guidelines require the DEIR to consider alternatives to the proposed project. Section 15126(a) of the State CEQA Guidelines states that "*a range of reasonable alternatives to the project....which would feasibly attain... the basic objectives of the project*" must be considered. However, an alternative that is not available and could result in aviation safety impacts should not be considered as feasible. The alternative location on the Airport is not feasible and thus should not be considered as a valid alternative.

NEPA Compliance

6-5 The DEIR Section 2.2.5 states that it may be used for National Environmental Policy Act (NEPA) compliance if suitable to the Federal agency. However, NEPA requires that alternatives be feasible based on technical, economic and other factors. Again the location on the Airport renders it infeasible due to potential safety hazards. Specific language regarding alternatives may be found in the Code of Federal Regulations, 40 CFR 1502.14.

Caltrans Airport Land Use Handbook

6-6 The Aeronautics Division of Caltrans administers the guidance for airport land use compatibility as provided in the Public Utilities Code (PUC) Section 21670. The reference guidebook is the California Airport Land Use Planning Handbook available from their website. Further, Section 15154 of CEQA requires the Handbook be utilized for an EIR for a project within the boundaries of a comprehensive airport land use plan, which is the case for this Airport. While VVWRA is not specifically the agency that must comply with the Handbook, the Town of Apple Valley does have that jurisdiction over the Apple Valley Airport. The DEIR is required to include reference as to whether the project is consistent with the Handbook. Wildlife attractants and their proper distance from an airport are addressed in the Handbook.

Lack of Notice

6-7 The Department did not receive a notice of availability for the DEIR but should have for the following reasons:

- An alternative is located on Apple Valley Airport property. Even if it was actually located off of but near to Airport property, notice still should have been sent to the Department.
- The Department commented on the Notice of Preparation in June 2010. This letter is not included in the DEIR.
- Ponds of water could attract wildlife, especially avian species that could interfere with air traffic safety.

6-3 Your comment is noted and the information will be provided to the Authority Board prior to making a final decision on the project. The Authority concurs and based on the potential to attract birds to the basin, a decision has been made not to pursue future development of the Alternative 2 site for a percolation basin. This eliminates a potential adverse conflict with the Airport.

6-4 Your comment is noted and the information will be provided to the Authority Board prior to making a final decision on the project. VVWRA concurs with this comment and has dropped the Alternative 2 percolation basin site.

6-5 Your comment is noted and the information will be provided to the Authority Board prior to making a final decision on the project.

6-6 Your comment is noted and the information will be provided to the Authority Board prior to making a final decision on the project. As noted above, the Alternative 2 location is being abandoned by VVWRA, but since a land use entitlement is not involved with the proposed project, it is not clear that the Handbook applies to this project.

6-7 Your comment is noted. VVWRA did provide a copy of the Draft EIR in sufficient time for these comments to be submitted.

May 2010 Initial Study

The May 2010 Initial Study dismissed any potential effects on airports or air traffic patterns and no mitigation was proposed. Section XV (c) of the Initial Study provides this discussion:

6-8 "Would the Project result in a change in air traffic patterns, including either an increase in traffic levels or a change in location that results in substantial safety risks? *No impact* – The project would not result in a change in air traffic patterns, including either an increase in traffic levels or a change in location that results in substantial safety risks. Construction and operation activities for the proposed project have no potential to affect any air traffic patterns. No impact can occur and no mitigation is required."

The Department of Airports did not receive the Initial Study to review but should have been included on the mailing list due to the proximity of the Airport. Since the outdated USGS map used in the Initial Study does not show the second runway, the Airport looks as though it is further away from the alternate pond location.

Final EIR

6-9 While we have many concerns as described above, we have noted that the preferred location is the only one addressed in the Preliminary Design Report contained in Volume Two of the DEIR. Rather than request the Alternative 2 for the Town of Apple Valley percolation pond location be deleted and the DEIR recirculated, we believe it will be acceptable to address this in the Final EIR by noting this alternative is deleted from further consideration due to potential impacts to the Airport and air traffic.

Please include us on the distribution list for the Final EIR.

Sincerely,

Carrie Hyke

Carrie Hyke, AICP
Airports Planner

cc: Jeffrey O. Rigney, Director, Special Districts Department
Mike N Williams, A.A.E., Director of Airports
Terry Stover, Apple Valley Airport Manager
Lori Lamson, Community Development Director, Town of Apple Valley

6-8 Your comment is noted and the information will be provided to the Authority Board prior to making a final decision on the project.

6-9 VVWRA concurs with this comment and has deleted the Alternative 2 percolation basin from further consideration.

MITIGATION MONITORING AND REPORTING PROGRAM – DEIR

VICTOR VALLEY WASTEWATER RECLAMATION AUTHORITY, TOWN OF APPLE VALEY WRP, CITY OF HESPERIA WRP, AND RELATED FACILITIES MITIGATION MONITORING AND REPORTING PROGRAM

Mitigation Measure	Source	Implementation Schedule	Responsible Party	Verification	Status / Date / Initials
Air Quality					
4.2-1 Water active grading sites and haul roads at least three times daily and when dust is observed migrating from the site. (Mandatory) 4.2-2 Pave or apply water three times daily, or apply non-toxic soil stabilizers on all unpaved access roads, parking areas, and staging areas. More frequent watering will occur if dust is observed migrating from the site during grading activities. (Mandatory) 4.2-3 Enclose, cover, or water twice daily, or apply non-toxic soil binders, to any onsite stockpiles of debris, dirt or other dusty material. (Mandatory) 4.2-4 Suspend all grading and excavation operations when wind speeds exceed 25 mph. (Mandatory) 4.2-5 Replace ground cover or pave disturbed areas immediately after construction is completed in the affected area. (Mandatory) 4.2-6 Hydro-seed, apply non-toxic chemical soil stabilizers or otherwise stabilize any cleared area which is to remain inactive for more than 10 days after clearing is completed. (Mandatory)	Program Environmental Impact Report (PEIR)	These measures shall be implemented during construction.	Victor Valley Wastewater Reclamation Authority (VVWRA) or construction contractor	This measure shall be incorporated into the construction contract. Verification of implementation shall be based on field inspections by agency inspection personnel that verify the measure is being implemented during construction. Field notes documenting verification shall be retained in the project file.	

Mitigation Measure	Source	Implementation Schedule	Responsible Party	Verification	Status / Date / Initials
Air Quality (continued)					
4.2-7 Cover all trucks hauling soil, sand and other loose materials on local paved roadways. (Mandatory) 4.2-8 Sweep or wash any site access points daily of any visible dirt deposition on any public roadway. (Mandatory) 4.2-9 Reduce and control traffic speeds on unpaved roads to less than 15 mph. (Mandatory) 4.2-10 Install sandbags or other erosion control measures to prevent silt runoff to public paved roadways. (Mandatory) 4.2-11 To the extent feasible, limit the area subject to excavation, grading and other construction activity at any one time. (Optional) 4.2-12 All equipment shall be properly tuned and maintained in accordance with manufacturer's specifications to minimize nitrogen oxide emissions. (Mandatory) 4.2-13 General contractors shall maintain and operate construction equipment so as to minimize exhaust emissions. (Mandatory)	PEIR	These measures shall be implemented during construction.	VVWRA or construction contractor	This measure shall be incorporated into the construction contract. Verification of implementation shall be based on field inspections by agency inspection personnel that verify the measure is being implemented during construction. Field notes documenting verification shall be retained in the project file.	

Mitigation Measure	Source	Implementation Schedule	Responsible Party	Verification	Status / Date / Initials
Air Quality (continued)					
4.2-14 Require 90-day low NOx tune-ups for off road equipment. (Mandatory) 4.2-15 Use Tier3-rated engines during site grading for all equipment exceeding 100 horsepower, if available. (Optional) 4.2-16 During construction, trucks and vehicles in loading and unloading queues would be kept with their engines off, when not in use, to reduce exhaust emissions. (Mandatory) 4.2-17 Limit allowable idling to 5 minutes for trucks and heavy equipment. (Mandatory) 4.2-18 Encourage car pooling for construction workers. (Optional) 4.2-19 Limit lane closures to off-peak travel periods, when possible. (Optional) 4.2-20 Park construction vehicles off traveled roadways, when possible). (Optional) 4.2-21 Encourage receipt of materials during non-peak traffic hours. (Optional)	PEIR	These measures shall be implemented during construction.	VVWRA or construction contractor	This measure shall be incorporated into the construction contract. Verification of implementation shall be based on field inspections by agency inspection personnel that verify the measure is being implemented during construction. Field notes documenting verification shall be retained in the project file.	

Mitigation Measure	Source	Implementation Schedule	Responsible Party	Verification	Status / Date / Initials
Air Quality (continued)					
4.2-22 VVWRA shall establish a monitoring program to track Hesperia and Apple Valley Subregional facility operational electricity consumption. As part of this monitoring program, those non-GHG emitting electrical generation projects implemented by VVWRA shall be quantified to demonstrate the specific reductions in both criteria pollutants and GHG relative that which would occur from relying on electricity delivered by the Southern California Edison (SCE) grid. To the extent feasible and consistent with each agency's ability, an objective of offsetting criteria pollutant and GHG electricity consumption emissions by 50%, relative to reliance on the SCE grid, will be established. (Optional)	PEIR	The monitoring program shall be completed prior to initiating WRP operations and implemented during operations.	VVWRA or WRP Operator	A copy of the electricity consumption monitoring plan shall be retained in the project file. Periodic energy monitoring reports shall be compiled and retain in the project file. An annual report of findings shall also be compiled that will document the amount of GHG emissions saved at each WRP relative to energy consumption without conservation.	
4.2-23 To the extent feasible, the VVWRA shall select landscaping that is fast-growing to create visual buffers at future Apple Valley and Hesperia Subregional facility sites to offset GHG emissions. Where landscaping is feasible, a landscape plan designed to initiate carbon sequestration and these plants shall be periodically harvested and/or replanted to maintain carbon sequestration. Alternatively, these agencies may choose to purchase annual or permanent carbon credits from the available carbon banks at the time that a facility begins operation. (Optional)	PEIR	A copy of the landscape plans shall be developed before initiating operation. The carbon sequestered shall be quantified at least annually.	VVWRA or WRP Operator	A copy of the landscape plans shall be retained in the project file. VVWRA staff shall verify implementation of the plans, and retain the copy of carbon sequestration data compiled under this measure. A copy of the data shall be retained in he project file.	

Mitigation Measure	Source	Implementation Schedule	Responsible Party	Verification	Status / Date / Initials
Air Quality (continued)					
4.2-24 To the extent feasible, VVWRA shall select electrical equipment for future Apple Valley and Hesperia Subregional project that minimize electricity consumption. Documentation of such efforts shall be retained in project files to verify that electricity consumption of such equipment has been given consideration before selecting a specific piece of equipment, such as a booster pump. This measure is not intended to dictate selection of equipment that minimizes electricity consumption, only to ensure that this criterion is clearly given consideration in the selection of such equipment. Where electricity savings are achieved they shall be documented. (Optional)	PEIR	The energy conservation equipment shall be selected and installed prior to completing WRP construction.	VVWRA	A list of any energy saving equipment shall be compiled and retained in the project file.	

Mitigation Measure	Source	Implementation Schedule	Responsible Party	Verification	Status / Date / Initials
Biological Resources / Land Use & Planning					
Burrowing Owl and Desert Tortoise 4.3-1 Prior to, and, within 30 days of the start of any land disturbance activities, at all project locations, except those bounded by man-made facilities on all sides (such as a roadway through a residential subdivision), a qualified biologist shall conduct focused surveys to determine if desert tortoise or burrowing owl have migrated into the project area of potential effect (APE). If either species is encountered, land disturbance activities shall not commence until the biologist has implemented appropriate measures according to the CDFG and USFWS to clear the site for construction.	PEIR	The surveys shall be conducted within 30 days prior to initiating construction at any location not within an existing paved or graded right-of-way.	VVWRA	The biologist shall submit a report of survey findings for each survey conducted and a copy of the survey findings shall be retained in the project file.	
4.3-2 A biologist/monitor shall be present at the site during initial land disturbance activities. The biologist/monitor shall remain on-call during construction activities in developed roads. If tortoise or burrowing owls are encountered during construction, construction activities shall be halted in the vicinity of the find and the biologist/monitor called to the site. The contractor shall implement the recommendations of the biologist/monitor.	PEIR	The monitor shall be present during all initial ground disturbing activities where native habitat occurs. Management of construction activities if tortoise or burrowing owls are discovered shall occur shall be documented concurrent with the discovery.	VVWRA or contractor	A monitoring report shall be filed and retained in the project file at the completion of each monitoring effort. If tortoise or owls are encountered within the construction APE, any management actions shall be recorded and retained in the project file.	

Mitigation Measure	Source	Implementation Schedule	Responsible Party	Verification	Status / Date / Initials
Biological Resources / Land Use & Planning (continued)					
4.3-3 All personnel associated with the construction on the site shall attend a worker education class. This class shall include general information regarding the MGS, desert tortoise, and burrowing owl; relevant Federal and State laws; and worker responsibilities when working in Mojave desert habitat.	PEIR	All worker education shall be completed prior to initiating or partici-pating in construction activities.	VVWRA or contractor	All employees shall sign an education attendance sheet and the sheets for all employees shall be retained in the project file.	
<u>Mohave ground squirrel</u> 4.3-4 Permanent impacts to the acreage west of I-15 disturbed in support of the proposed Hesperia Alternative A Subregional WRP facilities shall assume presence of MGS and loss of an unquantified amount of occupied MGS habitat will occur as a result of the project. a. The project proponent shall provide compensation for permanent impacts to MGS habitat by protecting in perpetuity (through property or mitigation bank credit acquisition) habitat for the sensitive species at a ratio of not less than 1:1 (protected: destroyed.) The mitigation property may be acquired by purchase of mitigation credits in a mitigation bank acceptable to the regulatory agencies, purchase of occupied habitat in the project area, or	PEIR	The 2081 permit shall be obtained prior to initiating construction on the Hesperia Alternative A site and identified mitigation shall be implemented as scheduled in the 2081 permit.	VVWRA	A copy of the 2081 permit shall be retained in the project file. When the mitigation is implemented, documentation of imple-mentation shall be retained in the project file.	

Mitigation Measure	Source	Implementation Schedule	Responsible Party	Verification	Status / Date / Initials
Biological Resources / Land Use & Planning (continued)					
4.3-4 (cont.) rehabilitation of degraded habitat adjacent to known occupied habitat. b. The project proponent will provide an endowment, to be determined at the time the impact is quantified, adequate to fund ongoing management requirements for the property purchased or rehabilitated. c. Temporary impacts of habitat are proposed to be mitigated by appropriate revegetation to be approved by the agencies. d. If required by the Agencies, precautionary mitigation measures will include exclusionary fence placement around construction in areas where MGS are documented to occur to be maintained for the duration of project construction activities. The fenced area will be trapped for MGS, and all MGS will be removed from inside the fenced, relocated to outside of the fenced area and all rodent burrows collapsed within the disturbed area. Night lighting may have an indirect effect on adjacent habitat and any night lighting shall be focused on the immediate area of construction and					

Mitigation Measure	Source	Implementation Schedule	Responsible Party	Verification	Status / Date / Initials
Biological Resources / Land Use & Planning (continued)					
4.3-4 (cont.) night lighting shall be limited in time to the minimum night construction essential to support the project. e. The final mitigation may differ from the above values based on negotiations between the project proponent and CDFG for an incidental take permit (2081 Permit). The project proponent shall retain a copy of the incidental take permit as verification that the mitigation of MGS impacts at a project site has been accomplished. The VVWRA concludes that this is sufficient mitigation for loss of habitat and impacts to MGS as a result of the project. If the regulatory permitting agency(ies) issue permits for this project that specify a different mitigation than provided in this measure, the VVWRA will ensure implementation of such mitigation as long as it is equivalent to or not less than that specified in this measure.					

Mitigation Measure	Source	Implementation Schedule	Responsible Party	Verification	Status / Date / Initials
Biological Resources / Land Use & Planning (continued)					
Nesting Birds 4.3-5 To avoid an illegal take of active bird nests, any grubbing, brushing or tree removal will be conducted outside of the State identified nesting season of February 15 through September 1. Alternatively, project impact areas will be evaluated by a qualified biologist prior to initiation of ground disturbance to determine the presence or absence of nesting birds.	PEIR	This measure shall be implemented prior to and during construction.	VVWR or contractor	Documentation demonstrating construction outside of the nesting season shall be retained in the project file, or, alternatively a study verifying lack of nests within a project area shall be retained in the project file.	
Rivers, Streambeds, or Wetlands 4.3-6 Prior to discharge of fill or streambed alteration of either of the channels along the project alignment, the VVWRA shall obtain regulatory permits from the U.S. Army Corps of Engineers, Lahontan Regional Water Quality Control Board and the CDFG, where required. Mitigation can be provided by purchasing into any authorized mitigation bank; by selecting a site of comparable acreage near the site and enhancing it with a native riparian habitat or invasive species removal in accordance with a habitat mitigation plan approved by regulatory agencies; or by acquiring sufficient compensating habitat to meet regulatory agency requirements. Typically, regulatory agencies require mitigation for jurisdictional waters without any riparian or wetland habitat to be mitigated at a	PEIR	This measure shall be implemented prior to initiating construction within a streambed or waters of the United States.	VVWRA	A copy of the regulatory permits shall be retained in the project file. Documentation that all mitigation is implemented shall be retained in the project file.	

Mitigation Measure	Source	Implementation Schedule	Responsible Party	Verification	Status / Date / Initials
Biological Resources / Land Use & Planning (continued)					
4.3-6 (cont.) 1:1 ratio. For loss of any riparian or other wetland areas, the mitigation ratio will begin at 2:1 and the ratio will rise based on the type of habitat, habitat quality, and presence of sensitive or listed plants or animals in the affected area. A revegetation plan using native riparian vegetation common to the project area shall be prepared and reviewed and approved by the appropriate regulatory agencies. The agencies can impose greater mitigation requirements in their permits, but the VVWRA will utilize the ratios outlined above as the minimum required to offset or compensate for impacts to jurisdictional waters, riparian areas or other wetlands.					
<u>Local Plants</u> 4.3-7 In the event that one of the sensitive plant species identified in the CNDDB is positively identified on site, during construction, the plant will be flagged and avoided until the CDFG is notified and takes their opportunity to salvage the plant.	PEIR	This measure shall be implemented prior to and during construction.	VVWRA or contractor	Documentation of discovery and relocation or protection of sensitive plants shall be retained in the project file.	

Mitigation Measure	Source	Implementation Schedule	Responsible Party	Verification	Status / Date / Initials
Biological Resources / Land Use & Planning (continued)					
4.3-8 As required by the San Bernardino County plant protection Ordinance (or City or Town ordinances), the project proponents shall develop a cactus relocation plan to offset impacts to Joshua trees and other cactus species that may need to be removed as part of this project. This plan will identify the number and species of cactus to be protected in place or removed and relocated.	PEIR	Any plant relocations shall be completed prior to construction where the plants exist.	VVWRA or contractor	Documentation of all plant relocations shall be retained in the project file.	
<u>Desert tortoise and Mohave ground squirrel</u> 4.3-9 Following the pre-construction survey, a qualified biologist will make a determination: (1) if a biological monitor shall be present at the site during all land disturbance activities; (2) if desert tortoise fencing needs to be installed around the perimeter of the construction work zone; or (3) if no further action is required. a. If a desert tortoise is encountered during construction, no person including the biologist will touch the animal. Instead, the biologist will observe the area to see if the desert tortoise has an established burrow or if it is just wandering through the site. If it is clearly just moving through the site, all construction activity near the tortoise will cease until it is safely out of the area. The biologist will contact	PEIR	The pre-construction survey shall occur within 30 days prior to initiating construction at any location. If monitoring is required, the monitors shall maintain records of monitoring in a closure report when monitoring is completed.	VVWRA or contractor	The survey results shall be retained in the project file. The monitoring report shall also be retained in the project file.	

Mitigation Measure	Source	Implementation Schedule	Responsible Party	Verification	Status / Date / Initials
Biological Resources / Land Use & Planning (continued)					
4.3-9 (cont.) the USFWS and CDFG to coordinate with them for further instruction. At that time it may be appropriate to erect exclusionary fencing to prevent the re-entry of the desert tortoise back into the site. If the biologist finds that the desert tortoise is residing in a burrow on site, then all construction must cease until the USFWS and CDFG have issued take authority to relocate the tortoise out of the area in the vicinity of the burrow. In this case, land disturb-ance activities shall not commence until the biologist has implemented the required measures according to the CDFG and USFWS to clear the site for construction. b. The biologist/monitor shall remain on-call during construction activities. If a desert tortoise is encountered during construction following the initial phases of ground disturbance, construction activities shall be halted in the vicinity of the find and the biologist/monitor called to the site. The contractor shall implement the recommendations of the biologist/ monitor. Implementation of the above measures is protective of the environment. Should the regulatory					

Mitigation Measure	Source	Implementation Schedule	Responsible Party	Verification	Status / Date / Initials
Biological Resources / Land Use & Planning (continued)					
4.3-9 (cont.) agencies determine an alternative, equivalent mitigation program during acquisition of regulatory permits, such measure shall be deemed equivalent to the above measures and no additional environmental documentation shall be required to implement a measure different than outlined above.					
4.3-10 Within 30 days of the start of any land disturbance activities, a qualified biologist shall survey the site to determine if burrowing owls are present and nesting in the construction area. If burrowing owl are encountered and determined to be nesting, land disturbance activities shall not commence until the biologist has implemented the required measures according to the CDFG to clear the site for construction. One such measure may be to passively relocate the owls once the young have fledged the nest. This type of relocation requires the construction of artificial burrows in the near vicinity and collapsing of the old burrows once the owls have clearly flushed out of the site. If burrowing owls are encountered during construction,	PEIR	The pre-construction survey shall occur within 30 days prior to initiating construction at any location. If monitoring is required, the monitors shall maintain records of monitoring in a closure report when monitoring is completed.	VVWRA or contractor	The survey report shall be retained in the project file. Any management actions for burrowing owl shall be documented and documentation retained in the project file.	

Mitigation Measure	Source	Implementation Schedule	Responsible Party	Verification	Status / Date / Initials
Biological Resources / Land Use & Planning (continued)					
4.3-10 (cont.) construction activities shall be halted in the vicinity of the find and the biologist/ monitor called to the site. The contractor shall implement the recommendations of the biologist/monitor.					
4.3-11 All project activities will be limited to a well-defined and visually delineated area. Prior to grading and construction activities, the limits of disturbance will be clearly marked with flagging, stakes, or fencing.	PEIR	The project Area of Potential Effect boundaries shall be completed prior to ground disturbance.	VVWRA or contractor	VVWRA field inspectors shall verify that the limits of disturbance have been established prior to allowing construction to be initiated.	
4.3-12 All project construction activities shall implement measures to minimize the potential to introduce invasive plant species into construction sites. This shall be accomplished by requiring the contractor to verify that construction equipment used at the WRP facility sites have been washed to minimize introduction of invasive plant species. Also, following construction activities, VVWRA shall monitor and remove invasive plant species until disturbed areas at all facilities are revegetated with native species or covered with hard-scape, such as paving, gravel cover, etc.	PEIR	Invasive plant controls shall be implemented from the time construc-tion begins or equip-ment is brought to the site.	VVWRA or contractor	This measure shall be incorporated into the construction contract. Verification of implemen-tation shall be based on field inspections by agency inspection personnel that verify the measure is being implemented during construction. Field notes documenting verification shall be retained in the project file.	

Mitigation Measure	Source	Implementation Schedule	Responsible Party	Verification	Status / Date / Initials
Cultural Resources					
4.4-1 If unknown buried cultural or paleontological resources are discovered during project construction, all work in the area of the find shall cease, and a qualified archaeologist or paleontologist shall be retained by the project sponsor to investigate the find, and to make recommendations on its disposition. The VVWRA shall implement the archaeologist's recommendations as long as the cost does not exceed professional norms.	PEIR	This measure shall be implemented during construction if unknown resources are exposed during construction.	VVWRA	VVWRA shall retain all records of the discovery and management actions implemented in the project file.	
4.4-2 If human remains are encountered during construction, all work shall cease and the San Bernardino County Coroner's Office shall be contacted pursuant to procedures set forth in Section 7050.5 of the Health and Safety Code. The VVWRA shall be notified and actions to manage the remains shall be documented in a report to the VVWRA.	PEIR	This measure shall be implemented during construction if unknown resources are exposed during construction.	VVWRA	VVWRA shall retain all records of the discovery and management actions implemented in the project file.	

Mitigation Measure	Source	Implementation Schedule	Responsible Party	Verification	Status / Date / Initials
Cultural Resources (continued)					
4.4-3 VVWRA shall arrange to have a professional archaeologist monitor all trenching, excavation and other earth-moving activities in the Apple Valley portion of the APE. The archaeologist shall ensure proper and timely evaluation and treatment of any cultural resource materials unearthed in this area. If any cultural resources are encountered during construction monitoring, a professional report detailing findings from the management activities shall be prepared under Authority direction and retained.	PEIR	Monitoring shall be conducted during construction activities in the Apple Valley portion of the APE.	VVWRA	Reports of monitoring activities shall be compiled and retained in the project file.	
4.4-4 Prior to any planned construction activities at the future Eastside WRP site, a focused cultural resources survey shall be conducted to determine if any “historic properties” or “historical resources” are present within the project site that may be adversely affected by construction of the Eastside WRP.	PEIR	The cultural resource survey shall be imple-mented prior to any planned construction.	VVWRA	A copy of the study shall be retained in the project file.	

Mitigation Measure	Source	Implementation Schedule	Responsible Party	Verification	Status / Date / Initials
Hydrology / Water Quality					
4.5-1 The construction contractor shall prepare and implement a Storm Water Pollution Prevention Plan (SWPPP) which specifies Best Management Practices that will be implemented to prevent construction pollutants from contacting stormwater with the intent of keeping all products of erosion from moving offsite. The SWPPP shall be developed with the goal of achieving a reduction in pollutants both during and following construction to control urban runoff to the maximum extent practicable based on available, feasible best management practices. The SWPPP and the monitoring program for the construction projects shall be consistent with the requirements of the latest version of the State's General Construction Activity Storm Water Permit and NPDES Permit No. CAS618036, Order No. R8-2002-0012 for projects within San Bernardino County. The following items should be included in the SWPPP: • The length of trenches which can be left open at any given time should be limited to that needed to reasonably perform construction activities. This will serve to reduce the amount of backfill stored onsite at any given time.	PEIR	The SWPPP shall be compiled prior to construction and implemented during construction.	VVWRA or contractor	A copy of the SWPPP shall be retained in the project file. Verification of implementation shall be based on field inspections by agency inspection personnel that verify the measure is being imple-mented during construction. Field notes documenting verification shall be retained in the project file.	

Mitigation Measure	Source	Implementation Schedule	Responsible Party	Verification	Status / Date / Initials
Hydrology / Water Quality (continued)					
4.5-1 (cont.) • Backfill material should not be stored in areas which are subject to the erosive flows of water. • Measures such as the use of straw bales, sandbags, silt fencing or detention basins shall be used to capture and hold eroded material for future cleanup. • Rainfall will be prevented from entering material and waste storage areas and pollution-laden surfaces. • Construction-related contaminants will be prevented from leaving the site and polluting waterways. • Replanting and hydroseeding of native vegetation will be implemented to reduce slope erosion and filter runoff. • A spill prevention control and remediation plan to control release of hazardous substances.					

Mitigation Measure	Source	Implementation Schedule	Responsible Party	Verification	Status / Date / Initials
Hydrology / Water Quality (continued)					
4.5-2 The site design for Subregional WRP Project facilities shall prepare and implement a Water Quality Management Plan (WQMP) which specifies Best Management Practices that will be implemented to prevent long-term surface runoff from discharge of pollutants from sites on which construction has been completed. The WQMP shall be developed with the goal of achieving a reduction in pollutants following construction to control urban runoff pollution to the maximum extent practicable based on available, feasible best management practices.	PEIR	The WQMPP shall be compiled prior to construction; implemented during construction; and maintained during operations.	VVWRA	A copy of the WQMP shall be retained in the project file. Verification of implementation shall be based on field inspections by agency inspection personnel that verify the measure is being implemented during construction. Field notes documenting verification shall be retained in the project file.	
4.5-3 Any future Subregional WRP Project facilities that will be installed at a location where flood hazards may occur, must be hardened to withstand the defined flood hazard so that the facility can continue to operate or be available to be placed into immediate operation following the flooding.	PEIR	This measure shall be implemented during engineering design for the facility and during construction.	VVWRA or contractor	A copy of the engineered design shall be retained in the project file. Verification of implementation shall be based on field inspections by agency inspection personnel that verify the measure is being implemented during construction. Field notes documenting verification shall be retained in the project file.	

Mitigation Measure	Source	Implementation Schedule	Responsible Party	Verification	Status / Date / Initials
Hydrology / Water Quality (continued)					
4.5-4 For long-term mitigation of site disturbances at Subregional WRP facility locations, all areas not covered by structures shall be covered with hardscape (concrete, asphalt, gravel, etc.), native vegetation and/or man-made landscape areas (for example, grass). Revegetated or landscaped areas shall provide sufficient cover to ensure that, after a two year period, erosion will not occur from concentrated flows (rills, gully, etc.) and sediment transport will be minimal as part of sheet flows.	PEIR	The landscape plan, including hardscape areas, shall be completed prior to construction and implemented during construction.	VVWRA or contractor	A copy of the approved landscape plan shall be retained in the project file. Verification of implementation shall be based on field inspections by agency inspection personnel that verify the measure is being implemented during construction. Field notes documenting verification shall be retained in the project file.	
4.5-5 Within each facility or project associated with the Subregional WRP Project that will impact more than one acre, surface runoff from upstream shall be collected and discharged in a manner downstream of the site that does not increase downstream flood hazards. Onsite surface runoff shall be collected and retained (for use onsite) or detained and percolated into the ground on the site such that site development results in no net increase in offsite stormwater flows. Detainment shall be achieved through Low Impact Development techniques whenever possible, and shall include techniques that remove the majority of urban storm runoff pollutants, such as petroleum products and sediment. The	PEIR	The site drainage design for each facility shall be completed prior to construction and implemented during construction.	VVWRA	A copy of the approved site drainage plans shall be retained in the project file. Verification of implementation shall be based on field inspections by agency inspection personnel that verify the measure is being implemented during construction. Field notes documenting verification shall be retained in the project file.	

Mitigation Measure	Source	Implementation Schedule	Responsible Party	Verification	Status / Date / Initials
Hydrology / Water Quality (continued)					
4.5-5 (cont.) purpose of this measure is to remove the onsite contribution to cumulative urban storm runoff and ensure the discharge from the sites is treated to reduce contributions of urban pollutants to downstream flows and to groundwater. If it is not possible to eliminate stormwater flows from leaving a site, the facility shall not be constructed until a drainage study has been conducted that verifies that there will be no adverse impacts to downstream stormwater management from implementation of the site development.					
4.5-6 Under no circumstance shall discharge of recycled water cause or contribute to a cumulative violation of the 2005 Basin Plan maximum benefit objectives or interfere with a designated beneficial use for a water or groundwater body. In addition to monitoring, the VVWRA will use models to forecast future TDS and Nitrate concentrations pursuant to the Basin Plan and Title 22 permit requirements. VVWRA will, based on monitoring, begin the planning to develop measures to either protect beneficial uses of groundwater or to treat groundwater to meet beneficial use requirements if a violation appears imminent.	PEIR	Groundwater monitoring at the use locations for recycled water shall be implemented prior to initiating construction of a WRP. If groundwater quality deviates from model forecasts, VVWRA shall identify measures to prevent significant degradation of groundwater, if necessary, within six months of discovery of deviation.	VVWRA	A copy of the groundwater monitoring program for each required location shall be retained in the project file. The groundwater degradation prevention or control measures shall be implemented within the identified schedule in the study. Verification shall be based on ongoing monitoring. All data shall be retained in the project file.	

Mitigation Measure	Source	Implementation Schedule	Responsible Party	Verification	Status / Date / Initials
Hydrology / Water Quality (continued)					
4.5-7 Hydrogeologic studies, including modeling, will be completed for each percolation basin site to define the impacts from percolating the recycled water on known groundwater quality. If modeling demonstrates that contamination of a downstream well associated with such percolation expansion will adversely impact groundwater or water production capabilities, the recharge facility shall be closed and moved to an alternative location where such impacts will not occur or other adaptive management programs shall be implemented.	PEIR	The hydrologic studies shall be completed prior to discharge to the percolation basins. Follow-on actions shall be implemented based on findings of the modeling.	VVWRA	Copies of the hydrogeologic studies shall be retained in the project file. Follow-on management actions shall be documented and retained in the project file. Implementation shall be verified by VVWRA staff.	
4.5-8 All water recharge operations shall be monitored, and if impacts that were not forecast to occur as a result of recycled water recharge operations cause unexpected significant adverse impact on the groundwater aquifer, the recharge operations shall be terminated or modified to eliminate the adverse impact.	PEIR	Groundwater monitoring at the use locations for recycled water shall be implemented prior to initiating construction of a WRP. Follow-on actions shall be documented as they occur.	VVWRA	A copy of the groundwater monitoring program for each required location shall be retained in the project file. The groundwater degradation prevention or control measures shall be implemented within an identified schedule. Verification shall be based on ongoing monitoring. All data shall be retained in the project file.	

Mitigation Measure	Source	Implementation Schedule	Responsible Party	Verification	Status / Date / Initials
Noise					
4.6-1 Construction shall be limited to the hours of 7 a.m. to 7 p.m. on Monday through Friday, and between 9 a.m. to 6 p.m. on Saturday, and shall be prohibited on Sundays and federal holidays, or as defined in local noise ordinances. Exceptions are for water pumping from wet areas or declared emergency circumstances. (Mandatory)	PEIR	This measure shall be implemented during construction.	VVWRA or contractor	A copy of this requirement shall be incorporated into the construction contract. Verification of implementation shall be based on field inspections by agency inspection personnel that verify the measure is being implemented during construction. Field notes documenting verification shall be retained in the project file.	
4.6-2 All construction vehicles and fixed or mobile equipment shall be equipped with properly operating and maintained mufflers. (Mandatory)	PEIR	This measure shall be implemented during construction.	VVWRA or contractor	A copy of this requirement shall be incorporated into the construction contract. Verification of implementation shall be based on field inspections by agency inspection personnel that verify the measure is being implemented during construction. Field notes documenting verification shall be retained in the project file.	

Mitigation Measure	Source	Implementation Schedule	Responsible Party	Verification	Status / Date / Initials
Noise (continued)					
4.6-3 All employees that will be exposed to noise levels greater than 75 dB over an 8-hour period shall be provided with adequate hearing protection devices to ensure no hearing damage will result from construction activities. (Mandatory)	PEIR	This measure shall be implemented during construction.	VVWRA or contractor	A copy of this requirement shall be incorporated into the construction contract. Verification of implementation shall be based on field inspections by agency inspection personnel that verify the measure is being implemented during construction. Field notes documenting verification shall be retained in the project file.	
4.6-4 If equipment is being used that can cause hearing damage at adjacent noise receptor locations (distance attenuation shall be taken into account), portable noise barriers shall be installed that are demonstrated to be adequate to reduce noise levels at receptor locations below hearing damage thresholds. (Optional)	PEIR	This measure shall be implemented during construction.	VVWRA or contractor	A copy of this requirement shall be incorporated into the construction contract. Verification of implementation shall be based on field inspections by agency inspection personnel that verify the measure is being implemented during construction. Field notes documenting verification shall be retained in the project file.	

Mitigation Measure	Source	Implementation Schedule	Responsible Party	Verification	Status / Date / Initials
Noise (continued)					
4.6-5 All production lift stations or booster pumps shall have their noise levels attenuated to 50 dBA CNEL at the adjacent property boundary, when noise sensitive uses occur on such property, or in accordance with a local noise ordinance.	PEIR	The noise attenuation design shall be completed prior to construction; installed during construction; and measured after operations to ensure effectiveness.	VVWRA	The design shall be retained in the project file. Field inspectors shall verify that the noise measures are installed in accordance with the design. The noise levels outside of the pump station housing shall be verified to meet the standard or additional noise attenuation features shall be installed.	
4.6-6 Schedule the construction such that the minimum number of pieces of equipment will be operating at the same time. (Optional)	PEIR	This measure shall be implemented during construction.	VVWRA or contractor	A copy of this requirement shall be incorporated into the construction contract. Verification of implementation shall be based on field inspections by agency inspection personnel that verify the measure is being implemented during construction. Field notes documenting verification shall be retained in the project file.	

Mitigation Measure	Source	Implementation Schedule	Responsible Party	Verification	Status / Date / Initials
Noise (continued)					
4.6-7 Utilize construction methods or equipment that will provide the lowest level of noise impact, i.e., use newer equipment that will generate lower noise levels. (Optional)	PEIR	This measure shall be implemented during construction.	VVWRA or contractor	A copy of this requirement shall be incorporated into the construction contract. Verification of implementation shall be based on field inspections by agency inspection personnel that verify the measure is being implemented during construction. Field notes documenting verification shall be retained in the project file.	
4.6-8 Maintain good relations with the local community where construction is scheduled, such as keeping people informed of the schedule, duration, and progress of the construction, to minimize the public objections of unavoidable noise. Communities should be notified in advance of the construction and the expected temporary and intermittent noise increases during the construction period. (Optional)	PEIR	This measure shall be implemented during construction.	VVWRA or contractor	A copy of this requirement shall be incorporated into the construction contract. Verification of implementation shall be based on field inspections by agency inspection personnel that verify the measure is being implemented during construction. Field notes documenting verification shall be retained in the project file.	

MITIGATION MONITORING AND REPORTING PROGRAM – INITIAL STUDY

VICTOR VALLEY WASTEWATER RECLAMATION AUTHORITY, TOWN OF APPLE VALEY WRP, CITY OF HESPERIA WRP, AND RELATED FACILITIES MITIGATION MONITORING AND REPORTING PROGRAM

Mitigation Measure	Source	Implementation Schedule	Responsible Party	Verification	Status / Date / Initials
Aesthetics					
I-1 A facilities lighting plan shall be prepared and shall demonstrate that glare from operating and safety night lights that may create light and glare affecting adjacent occupied property are sufficiently shielded to prevent light and glare from spilling into occupied structures. This plan shall be implemented in conformance with the Town of Apple Valley and/or City of Hesperia and it shall be reviewed and approved by the Authority staff prior to installation of the night lights.	Initial Study	The facilities lighting plan shall be completed and approved prior to initiating construction of any facility with lighting. The plan shall be implemented during construction.	VVWRA or contractor	A copy of the approved lighting plan shall be retained in the project file. Verification of implementation shall be based on field inspections by agency inspection personnel that verify the measure is being implemented during construction. Field notes documenting verification shall be retained in the project file.	
Geology and Soils					
VI-1 Comprehensive geotechnical investigations shall be required prior to engineering and design development or structural and/or substantial rehabilitation of structures identified under Risk Class I & II, e.g., public facilities, as identified below: • Risk Class I & II, Structures Critically Needed after Disaster: Structures that are critically needed after a disaster include important utility centers, fire stations, police stations, emergency communication facilities, hospitals, and critical transportation elements such as bridges and overpasses and smaller dams.	Initial Study	The geotechnical investigation shall be completed prior to construction of any facilities and implemented during construction.	VVWRA	A copy of the completed geotechnical investigation shall be retained in the project file. Verification of implementation shall be based on field inspections by agency inspection personnel that verify the measure is being implemented during construction. Field notes documenting verification shall be retained in the project file.	

Mitigation Measure	Source	Implementation Schedule	Responsible Party	Verification	Status / Date / Initials
Geology and Soils (continued)					
VI-1 (cont.) Acceptable Damage: Minor non-structural; facility should remain operational and safe, or be suitable for quick restoration of service. • Risk Class III: High occupancy structures; uses are required after disasters (i.e., places of assembly such as schools and church. Acceptable Damage: Some impairment of function acceptable; structure needs to remain operational. • Risk Class IV, Ordinary Risk Tolerance: The vast majority of structures in urban areas; most commercial and industrial buildings, small hotels and apartment buildings, and single family residences.					
VI-2 Construction specifications will include appropriate measures for stabilizing excavations (such as covering soil piles with plastic or using spray on soil stabilizers to control fugitive dust) based on recommendation of project geotechnical studies.	Initial Study	This measure shall be included in the construction specifications prior to approval of the construction contract. The measure shall be implemented during construction.	VVWRA	A copy of the construction specification shall be retained in the project file. Verification of implementation shall be based on field inspections by agency inspection personnel that verify the measure is being implemented during construction. Field notes documenting verification shall be retained in the project file.	

Mitigation Measure	Source	Implementation Schedule	Responsible Party	Verification	Status / Date / Initials
Geology and Soils (continued)					
VI-3 Trenches will remain open for as short a time as possible.	Initial Study	This measure shall be included in the construction specifications prior to approval of the contract. This measure shall be implemented during construction.	VVWRA	A copy of the construction specification shall be retained in the project file. Verification of implementation shall be based on field inspections by agency inspection personnel that verify the measure is being implemented during construction. Field notes documenting verification shall be retained in the project file.	
VI-4 Soils, where exposed, will be stabilized with hay bales or aggregate cover.	Initial Study	This measure shall be included in the construction specifications prior to approval of the contract. This measure shall be implemented during construction.	VVWRA	A copy of the construction specification shall be retained in the project file. Verification of implementation shall be based on field inspections by agency inspection personnel that verify the measure is being implemented during construction. Field notes documenting verification shall be retained in the project file.	

Mitigation Measure	Source	Implementation Schedule	Responsible Party	Verification	Status / Date / Initials
Geology and Soils (continued)					
VI-5 Construction specifications will identify proper compaction for backfilled soils.	Initial Study	This measure shall be included in the construction specifications prior to approval of the contract. This measure shall be implemented during construction.	VVWRA	A copy of the construction specification shall be retained in the project file. Verification of implementation shall be based on field inspections by agency inspection personnel that verify the measure is being implemented during construction. Field notes documenting verification shall be retained in the project file.	
Transportation / Circulation					
XV-1 The construction contractor will provide adequate traffic management resources, such as protective devices, flag persons, and police assistance for traffic control, to maintain safe traffic flow on local streets affected by facilities and pipeline construction at all times.	Initial Study	This measure shall be incorporated into a construction traffic management plan that will be completed and approved prior to construction. The plan with this measure shall be implemented during construction.	VVWRA or contractor	A copy of the approved construction traffic management plant shall be retained in the project file. Verification of implementation shall be based on field inspections by agency inspection personnel that verify the measure is being implemented during construction. Field notes documenting verification shall be retained in the project file.	

Mitigation Measure	Source	Implementation Schedule	Responsible Party	Verification	Status / Date / Initials
Transportation / Circulation (continued)					
XV-2 The construction contractor will identify traffic hazards created by construction, such as rough road or potholes, freshly paved locations, and minimize total traffic and vehicle speed through such hazards.	Initial Study	This measure shall be incorporated into a construction traffic management plan that will be completed and approved prior to construction. The plan with this measure shall be implemented during construction.	VVWRA or contractor	A copy of the approved construction traffic management plant shall be retained in the project file. Verification of implementation shall be based on field inspections by agency inspection personnel that verify the measure is being implemented during construction. Field notes documenting verification shall be retained in the project file.	
XV-3 The construction contractor will ensure that traffic safety hazards, such as uncovered or unfilled open trenches, will not be left in roadways during period of time when construction personnel are not present, such as nighttime and weekends.	Initial Study	This measure shall be incorporated into a construction traffic management plan that will be completed and approved prior to construction. The plan with this measure shall be implemented during construction.	VVWRA or contractor	A copy of the approved construction traffic management plant shall be retained in the project file. Verification of implementation shall be based on field inspections by agency inspection personnel that verify the measure is being implemented during construction. Field notes documenting verification shall be retained in the project file.	

Mitigation Measure	Source	Implementation Schedule	Responsible Party	Verification	Status / Date / Initials
Transportation / Circulation (continued)					
XV-4 The construction contractor will repair all roads adequately after construction to ensure that traffic can move in the same manner as before construction.	Initial Study	This measure shall be incorporated into a construction traffic management plan that will be completed and approved prior to construction. The plan with this measure shall be implemented during construction.	VVWRA or contractor	A copy of the approved construction traffic management plant shall be retained in the project file. Verification of implementation shall be based on field inspections by agency inspection personnel that verify the measure is being implemented during construction. Field notes documenting verification shall be retained in the project file.	
XV-5 At all times during construction, the contractor will ensure that emergency fire, police or medical vehicles are able to access all adjacent areas. Additionally, construction equipment or activities must not obstruct or hinder traffic that might be generated during an evacuation.	Initial Study	This measure shall be incorporated into a construction traffic management plan that will be completed and approved prior to construction. The plan with this measure shall be implemented during construction.	VVWRA or contractor	A copy of the approved construction traffic management plant shall be retained in the project file. Verification of implementation shall be based on field inspections by agency inspection personnel that verify the measure is being implemented during construction. Field notes documenting verification shall be retained in the project file.	

DRAFT EIR

Notice of Availability of a
Draft Environmental Impact Report (EIR)
for the Victor Valley Wastewater Reclamation Authority:
Town of Apple Valley Wastewater Reclamation Plant,
City of Hesperia Wastewater Reclamation Plant, and Related Facilities

The Victor Valley Wastewater Reclamation Authority (VVWRA) will serve as the Lead Agency under the California Environmental Quality Act (CEQA) and will coordinate the public review of an Environmental Impact Report (EIR) that will evaluate the potential significant environmental impacts that may result from constructing and operating two subregional wastewater reclamation facilities: Town of Apple Valley Wastewater Reclamation Plant, City of Hesperia Wastewater Reclamation Plant (WRP), and Related Facilities. The wastewater would be treated to meet Title 22 standards and the recycled water produced from the two proposed WRPs could be used for landscape irrigation, industrial operations and, if necessary, disposal to the regional groundwater aquifer in the Alto Subbasin of the Mojave River Basin. A Draft EIR (DEIR) has been prepared for the proposed project (copy available from VVWRA) which identifies the potentially significant environmental impacts of the project. If you wish to obtain a copy, please contact VVWRA as indicated below. Those issues evaluated in the DEIR are as follows: air quality, biological resources, cultural resources, hydrology/water quality, land use and planning, noise, population/growth inducement, and utilities and service systems. VVWRA serves as the Lead Agency for this document based on its responsibility for review and decision regarding the funding required before the project can proceed to be developed.

Thank you in advance for any comments you may submit in response to the DEIR. For agencies, please include the name of a contact person in your agency if you submit comments. If you have any questions, please contact Mr. Logan Olds at (760) 948-9849.

Comment Period: Based on the time limits defined by CEQA (45 days), your response to the DEIR should be sent at the earliest possible date, but no later than December 27, 2010. The DEIR is available for review at the VVWRA office. All comments and any questions should be directed to:

Mr. Logan Olds, General Manager
Victor Valley Wastewater Reclamation Authority
15776 Main Street, Suite 3
Hesperia, CA 92345
Tel: (760) 948-9849 • Fax: (760) 948-9897

Notice of Completion & Environmental Document Transmittal

Mail to: State Clearinghouse, P.O. Box 3044, Sacramento, CA 95812-3044 (916) 445-0613
For Hand Delivery/Street Address: 1400 Tenth Street, Sacramento, CA 95814 — 916/445-0613

SCH #_____

Project Title: Victor Valley Wastewater Reclamation Authority (VVWRA): Town of Apple Valley Wastewater Reclamation Plant, City of Hesperia Wastewater Reclamation Plant, and Related Facilities

Lead Agency VVWRA — Contact Person Logan Olds, General Manager
Mailing Address 15776 Main Street, Suite 3 — Phone (760) 948-9849
City Hesperia — Zip 92345 — County San Bernardino County

Project Location: County San Bernardino County — City/Nearest Community Town of Apple Valley and City of Hesperia
Cross Streets Bear Valley Road / Hesperia Road / I-15 — Zip Code 92345
Lat. / Long. 34° 28' 15" N / 117° 15' 25" W, (center or project area) — Total Acres approx. 60 acres
Assessor's Parcel No N/A — Section many — Twp 4, 5, 6 N — Range 3, 4, W — Base SBM
Within 2 miles: State Hwy # I-15 — Waterways Mojave River
Airports Apple Valley Airport — Railways BNSF Railway Company — Schools several

Document Type:

CEQA: ☐ NOP ☐ Early Cons ☐ Neg Dec ☐ Mit Neg Dec
■ Draft EIR ☐ Supplement/Subsequent EIR (Prior SCH No.) 2010051087 ☐ Other _____
NEPA: ☐ NOI ☐ EA ☐ Draft EIS ☐ FONSI
Other: ☐ Joint Document ☐ Final Document ☐ Other _____

Local Action Type:

☐ General Plan Update ☐ General Plan Amendment ☐ General Plan Element ☐ Community Plan
☐ Specific Plan ☐ Master Plan ☐ Planned Unit Development ☐ Site Plan
☐ Rezone ☐ Prezone ☐ Use Permit ☐ Land Division (Subdivision, etc.)
☐ Annexation ☐ Redevelopment ☐ Coastal Permit ■ Other Wastewater and Recycled Water Project

Development Type:

☐ Residential: Units _____ Acres _____
☐ Office: *Sq.ft.* _____ *Acres* _____ *Employees* _____
☐ Commercial: *Sq.ft.* _____ *Acres* _____ *Employees* _____
☐ Industrial: *Sq.ft.* _____ *Acres* _____ *Employees* _____
☐ Education _____
☐ Recreational _____
☐ Water Facilities: *Type* _____ *MGD* _____
☐ Transportation: *Type* _____
☐ Mining: *Mineral* _____
☐ Power: *Type* _____ *Watts* _____
■ Waste Treatment: *Type* recycled *MGD* up to 4
☐ Hazardous Waste: *Type* _____
☐ Other: _____

Project Issues Discussed in Document:

☐ Aesthetics / Visual
☐ Agricultural Land
■ Air Quality
■ Archaeological / Historical
■ Biological Resources
☐ Coastal Zone
■ Drainage / Absorption
☐ Economic / Jobs
☐ Fiscal
■ Floodplain / Flooding
☐ Forest Land / Fire Hazard
☐ Geologic / Seismic
☐ Minerals
■ Noise
■ Population / Housing Balance
☐ Public Services / Facilities
☐ Recreation / Parks
☐ Schools / Universities
☐ Septic Systems
☐ Sewer Capacity
■ Soil Erosion / Compaction / Grading
☐ Solid Waste
☐ Toxic / Hazards
☐ Traffic / Circulation
■ Vegetation
■ Water Quality
☐ Water Supply / Groundwater
■ Wetland/Riparian
■ Wildlife
■ Growth Inducing
☐ Land Use
☐ Cumulative Effects
☐ Other _____

Present Land Use / Zoning / General Plan Designation: N/A

Project Description: The proposed project consists of the construction and installation of the following components: a 1.0 MGD average flow Water Reclamation Plant in the Town of Apple Valley expandable to a 4.0 MGD Plant; a 1.0 MGD average flow Water Reclamation Plant in the City of Hesperia expandable to a 4.0 MGD Plant (the expansion would occur in the future when demand justifies such expansion at both WRPs); a lift station and force main to serve the proposed HEsperia WRP; modification of a lift station to serve the proposed Apple Valley WRP; and recycled water distribution infrastructure and disposal percolation ponds to serve each WRP. The wastewater will be treated to meet highly restrictive Title 22 recycled water requirements and will be used for industrial and lanscape irrigation with excess recycled water disposed of in percolation ponds.

Reviewing Agencies Checklist

Lead Agencies may recommend State Clearinghouse distribution by marking agencies below with an **"X"**.
If you have already sent your document to the agency please denote that with an **"S"**.

X	Air Resources Board	X	Office of Historic Preservation
	Boating / Waterways, Department of		Office of Public School Construction
	California Highway Patrol		Parks & Recreation
X	Caltrans District # 8		Pesticide Regulation, Department of
	Caltrans Division of Aeronautics		Public Utilities Commission
	Caltrans Planning (Headquarters)		Reclamation Board
	Coachella Valley Mountain Conservancy	X	Regional WQCB, # 6
	Coastal Commission		Resources Agency
	Colorado River Board		S.F. Bay Conservation & Development Commission
	Conservation, Department of		San Gabriel & Lower L.A. Rivers & Mtns Conservancy
	Corrections, Department of		San Joaquin River Conservancy
	Delta Protection Commission		Santa Monica Mountains Conservancy
	Education, Department of		State Lands Commission
	Energy Commission		SWRCB: Clean Water Grants
X	Fish & Game, Region # 6	X	SWRCB: Water Quality
	Food & Agriculture, Department of	X	SWRCB: Water Rights
	Forestry & Fire Protection		Tahoe Regional Planning Agency
	General Services, Department of		Toxic Substances Control, Department of
X	Health Services, Department of	X	Water Resources, Department of
	Housing & Community Development		
	Integrated Waste Management Board		Other
X	Native American Heritage Commission		Other
	Office of Emergency Services		

Local Public Review Period (to be filled in by lead agency)

Starting Date November 11, 2010 Ending Date December 27, 2010

Lead Agency (complete if applicable)

Consulting Firm: Tom Dodson & Associates
Address: 2150 N. Arrowhead Avenue
City/State/Zip: San Bernardino, CA 92405
Contact: Tom Dodson
Phone: (909) 882-3612

Applicant: Victor Valley Wastewater Reclamation Authority
Address: 15776 Main Street, Suite 3
City/State/Zip: Hesperia, CA 92345
Contact: Logan Olds, General Manager
Phone: (760) 948-9849

Signature of Lead Agency Representative:

Date: 8 Nov 10

Authority cited: Section 21083, Public Resources Code. Reference: Section 21161, Public Resources Code.

DRAFT ENVIRONMENTAL IMPACT REPORT FOR VICTOR VALLEY WASTEWATER RECLAMATION AUTHORITY, TOWN OF APPLE VALLEY WRP, CITY OF HESPERIA WRP, AND RELATED FACILITIES

Project Proponent and CEQA Lead Agency:

Victor Valley Wastewater Reclamation Authority
15776 Main Street, Suite 3
Hesperia, California 92345
(760) 948-9849

Preparer:

Tom Dodson & Associates
2150 North Arrowhead Avenue
San Bernardino, California 92405
(909) 882-3612

November 2010

REVIEW PERIOD: November 11, 2010 – December 27, 2010

TABLE OF CONTENTS

Volume 1 – Environmental Impact Report

Chapter 1 – EXECUTIVE SUMMARY

1.1 Background 1-1
1.2 Intended Use of this Environmental Impact Report 1-2
1.3 Project Background 1-2
1.4 Project Objectives 1-3
1.5 Impacts 1-3
1.6 Alternatives 1-6
1.7 Summary Table of Impacts 1-7

Chapter 2 – INTRODUCTION

2.1 Background 2-1
2.2 Summary Project Description 2-2
2.3 Purpose and Use of an EIR 2-2
2.2.1 Summary of Responses to the NOP 2-3
2.2.2 List of Issue Areas Found to Have No Impact, be Less Than Significant, or Less Than Significant With Mitigation Incorporated ... 2-11
2.2.3 Issue Areas Remaining Significant 2-12
2.2.4 Areas of Any Controversy / Issues to be Resolved 2-12
2.2.5 National Environmental Policy Act Compliance 2-12
2.4 Scope of Content of this DEIR 2-13
2.5 DEIR Format and Organization 2-14
2.6 Availability of the Town of Apple Valley WRP, City of Hesperia WRP, and Related Facilities DEIR 2-15
2.7 VVWRA Review Process 2-15

Chapter 3 – PROJECT DESCRIPTION

3.1 Introduction 3-1
3.2 Purpose and Need 3-2
3.3 Project Location 3-3
3.3.1 Town of Apple Valley WRP, Percolation Ponds and Pipeline Alignments 3-3
3.3.2 City of Hesperia WRP, Lift Station, Force Mains, and Percolation Ponds 3-4
3.3.3 Eastside WRP Site 3-5

TABLE OF CONTENTS (continued)

3.4 Project Characteristics 3-6
3.4.1 Town of Apple Valley Proposed Water Reclamation Facilities 3-7
3.4.2 City of Hesperia Proposed Water Reclamation Facilities 3-14
3.4.3 Eastside Regional WRP Potential Site Area 3-21
3.4.4 Construction Scenario 3-21
3.5 Entitlements, Approvals and Other Agency Participation 3-22
3.6 Cumulative Projects 3-24
3.7 Uses of this Environmental Impact Report 3-24

Chapter 4 – ENVIRONMENTAL IMPACT EVALUATION

4.1 Introduction 4-1
4.2 Air Quality 4-5
4.2.1 Introduction 4-5
4.2.2 Environmental Setting 4-5
4.2.3 Project Impacts 4-13
4.2.4 Mitigation Measures 4-30
4.2.5 Cumulative Impacts 4-32
4.2.6 Unavoidable and Adverse Impacts 4-32
4.3 Biological Resources / Land Use & Planning 4-33
4.3.1 Introduction 4-33
4.3.2 Environmental Setting 4-33
4.3.3 Regulatory Aspects 4-42
4.3.4 Project Impacts 4-43
4.3.5 Mitigation Measures 4-49
4.3.6 Cumulative Impacts 4-52
4.3.7 Unavoidable and Adverse Impacts 4-52
4.4 Cultural Resources 4-56
4.4.1 Introduction 4-56
4.4.2 Environmental Setting 4-57
4.4.3 Environmental Impacts 4-58
4.4.4 Mitigation Measures 4-61
4.4.5 Cumulative Impacts 4-62
4.4.6 Unavoidable Adverse Impacts 4-62
4.5 Hydrology / Water Quality 4-64
4.5.1 Introduction 4-64
4.5.2 Environmental Setting 4-64
4.5.3 Project Impacts 4-82
4.5.4 Mitigation Measures 4-127
4.5.5 Cumulative Impacts 4-129
4.5.6 Unavoidable Adverse Impacts 4-129

TABLE OF CONTENTS (continued)

4.6 Noise 4-140
4.6.1 Introduction 4-140
4.6.2 Noise Characteristics 4-140
4.6.3 Sensitive Receptors 4-142
4.6.4 Noise Standards 4-142
4.6.5 Environmental Setting 4-146
4.6.6 Environmental Impacts 4-148
4.6.7 Mitigation Measures 4-152
4.6.8 Cumulative Impacts 4-153
4.6.9 Unavoidable Adverse Impacts 4-153
4.7 Population and Housing 4-154
4.7.1 Introduction 4-154
4.7.2 Environmental Setting 4-154
4.7.3 Environmental Impacts 4-156
4.7.4 Mitigation Measures 4-158
4.7.5 Cumulative Impacts 4-158
4.7.6 Unavoidable Adverse Impacts 4-158
4.8 National Environmental Policy Act Environmental Issues 4-160
4.8.1 Coastal Zone Management Act and Coastal Barrier Resources 4-160
4.8.2 Wild and Scenic Rivers 4-160
4.8.3 Farmland Protection 4-160
4.8.4 Recreation and Section 4(f) Properties 4-160
4.8.5 Unique Natural Features and Areas 4-161
4.8.6 Invasive Species 4-161
4.8.7 Environmental Justice 4-161
4.8.8 Sole Source Aquifer 4-161

Chapter 5 – ALTERNATIVES

5.1 Introduction 5-1
5.2 No Project 5-2
5.3 City of Hesperia WRP Alternative Site No. 1 5-4
5.4 A Modified WRP Treatment Train to Include Reverse Osmosis 5-5
5.5 An Alternative Site to the Proposed Apple Valley WRP Site at Brewster Park 5-7
5.6 Conclusion 5-8

Chapter 6 – TOPICAL ISSUES

6.1 Growth Inducement 6-1
6.1.1 Direct Growth-Inducing Effects 6-1
6.1.2 Indirect Growth-Inducing Effects 6-2

TABLE OF CONTENTS (continued)

6.2 Cumulative Impacts 6-3
6.2.1 Air Quality 6-3
6.2.2 Biology Resources 6-4
6.2.3 Cultural Resources 6-4
6.2.4 Hydrology & Water Quality 6-4
6.2.5 Noise 6-5
6.2.6 Population and Housing 6-5
6.3 Significant Irreversible Environmental Changes 6-5
6.4 Significant Unavoidable Environmental Impacts 6-6

Chapter 7 – PREPARATION RESOURCES

7.1 Report Preparation 7-1
7.1.1 Lead Agency 7-1
7.1.2 EIR Consultant 7-1
7.1.3 EIR Technical Consultant 7-1
7.2 Bibliography 7-2

Chapter 8 – APPENDICES

8.1 Notice of Preparation / Initial Study
8.2 NOP Mailing List / NOP Comment Letters

Volume 2 – Technical Appendices *(under separate cover)*

Appendix 1 PDR – Town of Apple Valley WRPs (December 2009)
Appendix 2 PDR – City of Hesperia WRPs (December 2009)
Appendix 3 PDR – City of Hesperia Lift Station and Force Main (December 2009)

LIST OF TABLES

Table 1.5-1 Summary of Impacts and Mitigation Measures Discussed in this Draft EIR 1-9

Table 2.3-1 Required DEIR Contents 2-13

Table 3.3-1 Summary of Alternatives Hesperia Lift Station and Force Mains Design Information Memoranda VVWRA 3-4
Table 3.4-1 Apple Valley WRP Design Influent Wastewater Quality Characteristics 3-8
Table 3.4-2 Anticipated Effluent Discharge Limitations and Recommended Effluent Design Criteria for the Town of Apple Valley WRP 3-9
Table 3.4-3 Design Influent Wastewater Quality Characteristics 3-15
Table 3.4-4 Anticipated Effluent Discharge Limitations and Recommended Effluent Design Criteria for the City of Hesperia WRP 3-16

Table 4.2-1 CARB Ambient Air Quality Standards 4-7
Table 4.2-2 Health Effects Summary for Air Pollutants 4-10
Table 4.2-3 Victorville Monitoring Station Project Area Air Quality Monitoring Summary: 2003-2009 4-12
Table 4.2-4 Hesperia Monitoring Station Project Area Air Quality Monitoring Summary: 2003-2009 4-13
Table 4.2-5 MDAQMD Emissions Thresholds 4-14
Table 4.2-6 Federal Significance Thresholds 4-15
Table 4.2-7 Pipeline Construction Activity Emissions 4-16
Table 4.2-8 Pipeline 2010 On-Road Emissions from Crew Commuting 4-17
Table 4.2-9 Combined Emissions from Water Pipeline Installation and Employee Commuting 4-17
Table 4.2-10 Percolation Pond Construction Activity Emissions 4-18
Table 4.2-11 Percolation Pond 2010 On-Road Emissions from Crew Commuting 4-18
Table 4.2-12 Percolation Pond Construction and Employee Commuting 4-18
Table 4.2-13 Lift Station Construction Activity Emissions 4-19
Table 4.2-14 Lift Station 2010 On-Road Emissions from Crew Commuting 4-20
Table 4.2-15 Lift Station Construction and Employee Commuting 4-20
Table 4.2-16 WRP Construction Activity Emissions 4-21
Table 4.2-17 WRP Construction 2010 On-Road Emissions from Crew Commuting 4-21
Table 4.2-18 WRP Construction and Employee Commuting 4-21
Table 4.2-19 Attainment Status for Criteria Pollutants 4-23
Table 4.2-20 Worst-Case Daily Emissions Construction Crew Commuting and Mitigated Construction Activity 4-24
Table 4.2-21 Construction Duration for Each Project Component 4-25
Table 4.2-22 Annual Air Pollution Emissions – Mitigated Emissions 4-25
Table 4.2-23 Annual CO2 Construction Emissions 4-27
Table 4.2-24 D/T Levels for Wastewater Treatment Processes 4-29

LIST OF TABLES (continued)

Table 4.5-1 Projected VVWRA Service Area Flows, from April 2009 Update to the Flow Study 4-86
Table 4.5-2 Distribution of VVWRA Discharge Flows Under Current and Proposed Conditions 4-87
Table 4.5-3 Designated Beneficial Uses of the Upper Mojave River Groundwater Basin 4-94
Table 4.5-4 Applicable Water Quality Objectives and/or Criteria for Constituents of Concern in the Upper Mojave River Groundwater Basin 4-94
Table 4.5-5 Water Quality of VVWRA Recycled Water Compared to Groundwater Supplied by Major Water Agencies in the VVWRA Service Area 4-96
Table 4.5-6 Average Projected Subregional WRP pH Water Quality (WQ) 4-97
Table 4.5-7 Average Projected Subregional WRP TSS WQ 4-97
Table 4.5-8 Average Projected Subregional WRP TDS WQ 4-98
Table 4.5-9 Average Projected Subregional WRP Chloride WQ 4-99
Table 4.5-10 Average Projected Subregional WRP MBAS WQ 4-100
Table 4.5-11 Average Projected Subregional WRP Ammonia Nitrogen WQ 4-100
Table 4.5-12 Average Projected Subregional WRP Total Nitrogen WQ 4-101
Table 4.5-13 Average Projected Subregional WRP Nitrate-N WQ 4-102
Table 4.5-14 Average Projected Subregional WRP Arsenic WQ 4-103
Table 4.5-15 Average Projected Subregional WRP Total Copper WQ 4-103
Table 4.5-16 Average Projected Subregional WRP Total Zinc WQ 4-104
Table 4.5-17 Average Projected Subregional WRP Cyanide WQ 4-104
Table 4.5-18 Average Projected Subregional WRP Bis(2-ethyl)phthalate WQ 4-105
Table 4.5-19 Average Projected Subregional WRP THMs WQ 4-105
Table 4.5-20 Predicted Subregional WRP Pond Discharge Quality for Alternative Control Measures 4-108
Table 4.5-21 RO Removal Efficiencies 4-109
Table 4.5-22 Estimated Costs of the Subregional WRPs, as Proposed, vs. Alternative Control Measures 4-110
Table 4.5-23 2007/2008 Combined Monthly User Charges for VVWRA Member Agencies 4-111
Table 4.5-24 Estimated Population and EDUs at VVWRA Capacities 4-111
Table 4.5-25 Impacts of Alternative Control Measures of the Addition of the Subregional WRPs on VVWRA's Monthly User Charge 4-111
Table 4.5-26 County and Statewide 2007/2008 User Charge for Comparison 4-112
Table 4.5-27 Economic Impacts of Additional User Charges Associated with Alternative Control Measures for the Subregional WRPs 4-112
Table 4.5-28 Top 10 Sectors Affected by Implementation of Alternative Control Measures 4-113
Table 4.5-29 VVWRA West Regional (Shay Road) Reclaimed Water Availability 4-117

LIST OF TABLES (continued)

Table 4.6-1 Land Use Compatibility for Community Noise Environments 4-143
Table 4.6-2 Town of Apple Valley Noise Compatibility Standards Exterior Noise Standards 4-144
Table 4.6-3 City of Hesperia Noise Compatibility Standards Noise Standards 4-145
Table 4.6-4 Maximum Noise Levels for Mobile Equipment at Residential Structures . 4-146
Table 4.6-5 Maximum Noise Levels for Stationary Equipment at Residential Structures 4-146
Table 4.6-6 Existing Hourly LEQ and CNEL 4-147

LIST OF FIGURES

Figure 3-1 Regional Location 3-25
Figure 3-2 VVWRA Service Boundary 3-26
Figure 3-3 Apple Valley WRP Facilities 3-27
Figure 3-4 Apple Valley Water Reclamation Plant Percolation Ponds Site – Alternatives 1 & 2 3-28
Figure 3-5 Hesperia Lift Station and Force Main Alignment Alternatives 3-29
Figure 3-6 Alternative A – WRP West of Interstate Highway 15 3-30
Figure 3-7 Lift Station Location Map 3-31
Figure 3-8 Hesperia WRP Facility Sites 3-32
Figure 3-9 Overall Site Plan 3-33
Figure 3-10 Eastside Regional WTTP Vicinity Map 3-34
Figure 3-11 Eastside Regional WRP Potential Area 3-35
Figure 3-12 Site Layout 3-36
Figure 3-13 Process Flow Diagram 3-37
Figure 3-14 Conceptual Architectural Elevations 3-38
Figure 3-15 Site Layout 3-39
Figure 3-16 Process Flow Diagram 3-40
Figure 3-17 Lift Station Site Plan 3-41
Figure 3-18 Hesperia Lift Station – Section 2 3-42

Figure 4.3-1 Sensitive Species Record in the Vicinity of the Apple Valley Project Site 4-53
Figure 4.3-2 Sensitive Species Record in the Vicinity of the Hesperia Project Site 4-54
Figure 4.3-3 Sensitive Species Record in the Vicinity of the Proposed Eastside Parcel 4-55

Figure 4.5-1 VVWRA Current and Proposed Facilities in the Victor Valley 4-68
Figure 4.5-2 Groundwater Basin Boundaries and Subareas 4-70
Figure 4.5-3 Geohydrologic Cross-Sectional Map of the Regional and Floodplain Aquifers 4-71
Figure 4.5-4 Potentiometric Surface Map of the Regional and Floodplain Aquifers – Fall 1997 4-72
Figure 4.5-5 Potentiometric Surface Map of the Regional and Floodplain Aquifers – Springs 2006 4-73
Figure 4.5-6 Total Dissolved Solids 4-130
Figure 4.5-7 Nitrates 4-130
Figure 4.5-8 Manganese 4-131
Figure 4.5-9 Iron 4-131
Figure 4.5-10 Fluoride 4-132
Figure 4.5-11 Arsenic 4-132
Figure 4.5-12 Contours of Equal Groundwater Elevation, Spring 2008 4-133
Figure 4.5-13 Contours of Composite Total Dissolved Solids Concentrations 4-134
Figure 4.5-14 Contours of Composite Nitrate as N Concentrations 4-135

LIST OF FIGURES (continued)

Figure 4.5-15 FEMA FIRM Panel 5840 4-136
Figure 4.5-16 FEMA FIRM Panel 5845 4-137
Figure 4.5-17 FEMA FIRM Panel 6480 4-138
Figure 4.5-18 FEMA FIRM Panel 6485 4-139
Figure 4.5-19 Distribution of Flow Volumes Received by VVWRA 4-88

LIST OF ABBREVIATIONS AND ACROYMNS

ASR	aquifer storage and recovery
BOD	Biochemical Oxygen Demand
BOR	U.S. Bureau of Reclamation
CDFG	California Department of Fish and Game
CEQA	California Environmental Quality Act
EIR	environmental impact report
FEMA	Federal Emergency Management Agency
HMI	Human Machine Interface
MBR	membrane bioreactor technology
MGD	million gallons per day
NEPA	National Environmental Policy Act
PDRs	Preliminary Design Reports
PLCs	Programmable Logic Controllers
RWQCB	Regional Water Quality Control Board (Regional Board)
SBBM	San Bernardino Base Meridian
SCE	Southern California Edison
SCLA	Southern California Logistics Airport
SWPPP	Storm Water Pollution Prevention Plan
TKN	Total Kjeldahl Nitrogen
TSS	Total Suspended Solids
USFWS	U.S. Fish and Wildlife Service
USGS	U.S. Geological Survey
UV	ultra violet
VVWRA	Victor Valley Wastewater Reclamation Authority (Authority)
WAS	waste activated sludge
WDR	Waste Discharge Requirements
WRP	Water Reclamation Plant
WRR	Water Recycling Requirements

CHAPTER 1 – EXECUTIVE SUMMARY

1.1 BACKGROUND

This Executive Summary has been compiled by the Victor Valley Wastewater Reclamation Authority (VVWRA) for the installation of two Subregional Wastewater Reclamation Plants (WRPs), one in the Town of Apple Valley and the other in the City of Hesperia. VVWRA currently operates the Westside Regional Water Reclamation Plant that serves the communities of Hesperia, Apple Valley, Victorville, and much of the unincorporated area of the Victor Valley. VVWRA has prepared this Draft Environmental Impact Report (DEIR) that summarizes the environmental effects that are forecast to occur from installation and operation of these two Subregional WRPs and their support facilities (pipeline, lift stations, etc.). These facilities are hereafter termed the "proposed project."

This Chapter also contains a summary of the project background, project objectives, and project description. As required by the State California Environmental Quality Act (CEQA, Section 15123), this chapter of the DEIR contains a summary of environmental findings and mitigation measures. A tabular summary of impacts and mitigation measures is included at the end of this Executive Summary. Chapter 2 provides an Introduction to the DEIR and Chapter 3 provides a detailed Project Description. Chapters 4 through 6 contain the evaluation of potential environmental effects from implementing the proposed project, and a comparison between the available and feasible alternatives.

As the Lead Agency for compliance with the California Environmental Quality Act, VVWRA, is required to identify the potential environmental impacts of the project and where potential significant impacts are identified the agency must determine whether there are feasible mitigation measures or alternatives that can be implemented to avoid or substantially lessen significant environmental effects of the project. An Initial Study was completed to determine whether an EIR was required for the proposed project. Based on the information in the Initial Study, VVWRA concluded that the project proposed might cause significant adverse environmental impacts to the following issues that would require further analysis in an EIR: ***air quality, biological resources, cultural resources, hydrology/water quality, land use/planning, noise, population/growth inducement, and utilities/service systems.***

This DEIR has been prepared to address the issues identified above and provide an informational document intended for use by the VVWRA, interested and responsible agencies and parties, and the general public in evaluating the potential environmental effects of implementing this proposed project. A copy of the Initial Study is attached as Subchapter 8.1 in Chapter 8 and a copy of the Notice of Preparation (NOP) and comment letters are provided as Subchapter 8.2 in Chapter 8 of this DEIR.

CEQA requires that the VVWRA, the CEQA Lead Agency, consider the environmental information in the project record, including this DEIR, prior to making a decision regarding whether or not to approve and implement the proposed project. The decision that will be considered by VVWRA is whether to approve the capital improvement projects defined in Chapter 3 of this document, which include the Town of Apple Valley Wastewater Reclamation Plant, City of Hesperia Wastewater Reclamation Plant, and Related Facilities Project.

Alternatively, VVWRA can reject the project as proposed. This DEIR evaluates the environmental effects as outlined above.

VVWRA will serve as the CEQA Lead Agency pursuant to the State CEQA Guidelines Section 15015(b)(1). This DEIR has been prepared by Tom Dodson & Associates (TDA) under the direction of the VVWRA. TDA was retained to assist VVWRA to perform the independent review of the project required by CEQA before the DEIR is released. The VVWRA has reviewed the content of the DEIR and concurs in the conclusions and findings contained herein.

1.2 INTENDED USE OF THIS ENVIRONMENTAL IMPACT REPORT

This DEIR has been prepared in accordance with the California Environmental Quality Act (CEQA) Statutes and Guidelines, 2009, pursuant to Section 21151 of CEQA. The VVWRA is the local Lead Agency for the proposed project and has supervised the preparation of this DEIR. This DEIR is an information document prepared to inform public agency decision makers, interested parties and the general public of the potential environmental effects of implementing the proposed project, including any significant adverse environmental effects that may be caused by its implementation. This document also includes an evaluation of possible ways to minimize significant effects of the proposed project and reasonable alternatives to the proposed project are also identified and evaluated in the DEIR. This document assesses the impacts, including unavoidable significant adverse impacts and cumu¬lative impacts, related to the implementation of the proposed project.

1.3 PROJECT BACKGROUND

The VVWRA in collaboration with its member agencies, the City of Hesperia and the Town of Apple Valley, developed a strategic goal of locating subregional Water Reclamation Plants (WRPs) to augment reclaimed water treatment and reuse capabilities of the VVWRA's overall wastewater management system. Grant funding is being sought from the U.S. Bureau of Reclamation (BOR) to partially fund the construction of the proposed facilities to meet VVWRA's objective of providing reclaimed water within both communities to offset demand for potable water.

The following is a brief summary description of the activities proposed by the VVWRA Town of Apple Valley Wastewater Reclamation Plant, City of Hesperia Wastewater Reclamation Plant, and Related Facilities Project being evaluated in this Draft Environmental Impact Report.

The proposed project consists of the construction and installation of the following components: a 1.0 MGD average flow Water Reclamation Plant in the Town of Apple Valley expandable to a 4.0 MGD Plant; a 1.0 MGD average flow Water Reclamation Plant in the City of Hesperia expandable to a 4.0 MGD Plant (the expansion would occur in the future when demand justifies such expansion at both WRPs); a lift station and force main to serve the proposed Hesperia WRP; modification of a lift station to serve the proposed Apple Valley WRP; and recycled water distribution infrastructure and disposal percolation ponds to serve each WRP. The wastewater will be treated to meet highly restrictive Title 22 recycled water requirements and will be used for industrial and landscape irrigation with excess recycled water disposed of in percolation ponds.

1.4 PROJECT OBJECTIVES

The proposed project has five general objectives:

1. Construct wastewater reclamation plants at locations that facilitate an increase in the use of recycled water near end users.

2. Treat wastewater to produce effluent meeting the most stringent Title 22 Recycled Water criteria.

3. Provide the core infrastructure for expansion of the collection, treatment and disposal system as needed either to protect groundwater, or to accommodate growth in the VVWRA service area.

4. Maximize the total water supply available to the community.

5. Minimize any adverse economic and environmental impacts to the community.

In addition to these general objectives, specific objectives for the proposed facilities are as follows:

a. Provide sufficient wastewater treatment capacity to ensure continuous compliance with anticipated regulatory requirements.

b. Provide additional treatment capacity in the upper reaches of the service area to alleviate flows in downstream interceptors

c. Provide for future expansion of services.

The installation of the proposed components of the WRP and associated system infrastructure is considered essential to the VVWRA in order to continue meeting the public health and safety requirements for wastewater treatment and water supply within its service area and to meet Lahontan Regional Water Quality Control Board (Regional Board or RWQCB) water quality objectives.

1.5 IMPACTS

Based on data provided in this DEIR, VVWRA concluded the proposed project would not result in significant adverse environmental impacts. All of the potential environmental issues evaluated in this DEIR were determined to be less than significant impacts, either without mitigation or with implementation of the mitigation measures identified in this DEIR or the attached Initial Study (Subchapter 8.1). Note that the cumulative significant impacts are evaluated and determined in this document to also be less than significant impacts, based on a determination that the proposed project's contributions to such impacts are evaluated as being less than cumulatively considerable, which is the threshold identified in Section 15130 of the State CEQA Guidelines. Table 1.5-1 summarizes the environmental impacts and proposed mitigation measures for the environmental issues evaluated in this DEIR.

The following issues have been determined to experience **less than significant impacts** in the Initial Study (Subchapter 8.1), with or without mitigation.

Aesthetics/Visual: Due to the installation of future above-ground wastewater facilities in already developed locations, no potential for significant aesthetic/visual impacts was forecast to occur from implementation of the proposed Project. One mitigation measure was identified to minimize night-lighting impacts. With implementation of the mitigation measure the project-related aesthetic/visual impacts can be reduced to a less than significant impact level.

Agricultural Resources: Due to the developed nature of the project areas and lack of agricultural resources, no potential for significant agricultural resource impacts was forecast to result from implementation of the proposed Project. No mitigation was identified.

Geology and Soils Resources: Due to the location of the proposed project within a seismically active area, a potential for significant geology and soils resources impacts from implementation of the Project were identified in the Initial Study. A total of five mitigation measures were identified to minimize geology and soils resources impacts. With implementation of these mitigation measures, the project-related geology and soils resources impacts can be reduced to a less than significant impact level.

Hazards and Hazardous Materials: No potential for significant hazards and hazardous materials issue impacts were forecast to result from implementation of the proposed project. No mitigation measures were identified.

Mineral Resources: Limited mineral resource occur in the project area and the installation of future wastewater infrastructure facilities was determined to pose a less than significant impact to such resources without mitigation.

Public Services: The Initial Study concluded that implementation of the proposed project would not significantly impact fire protection, police protection, schools, recreation/parks or other public facilities. Therefore, these potential public service impacts were found to be less than significant without mitigation. No mitigation measures were identified.

Recreation: The proposed project includes development at existing recreational facilities; however, the Initial Study concluded that the installation of future water infrastructure facilities was determined to pose a less than significant impact to such resources without mitigation.

Transportation/Traffic: The Initial Study concluded that implementation of the proposed project would not significantly impact any airports or air traffic patterns. Therefore, potential air traffic transportation impacts were found to be less than significant without mitigation. Since transportation system facilities occur throughout much of the project area and the installation of future wastewater infrastructure facilities can directly impact roadways or traffic on such roadways, a potential for significant transportation/traffic impacts from implementation of the was identified in the Initial Study (Subchapter 8.1). A total of five mitigation measures were identified to minimize future project related transportation/traffic system impacts. With implementation of these mitigation measures, the project-related transportation/traffic impacts can be reduced to a less than significant impact level.

Utilities and Service Systems: The Initial Study concluded that implementation of the proposed project would not significantly or adversely impact any water supply or solid waste management issues. Therefore, potential water and solid waste service system impacts were found to be less than significant without mitigation. Since the installation of future wastewater infrastructure facilities may require result in impacts to existing stormwater flows, a potential for significant drainage system impacts from implementation of project construction activities was identified in the Initial Study. Temporary stormwater management measures will be imple-mented during construction of the proposed facilities to minimize future project related stormwater runoff/drainage system impacts. In addition, since the proposed project includes the construction of new wastewater treatment facilities (expansion of the existing regional facilities), the construction of these facilities which may cause significant environmental effects, this issue was determined to generally require further analysis in the DEIR. These issues are addressed under the Hydrology/Water Quality Subchapter of the DEIR (Subchapter 4.4) of Chapter 4.

The following issues have been determined to experience **less than significant impacts** in the Draft Environmental Impact Report (DEIR), Chapter 4, with mitigation.

Air Quality: After detailed evaluation of the potential for the proposed project to impact air quality, the DEIR evaluation concluded that these impacts could be mitigated to a less than significant impact level. A total of twenty-four mitigation measures were identified to minimize future project related air quality impacts within the project area. With implementation of these mitigation measures, the project related air quality impacts can be reduced or controlled to a less than significant impact level.

Biological Resources: After detailed evaluation of the potential for the proposed project to impact biological resources, including conflict with habitat conservation plans, the DEIR evaluation concluded that these impacts could be mitigated to a less than significant impact level. A total of eleven mitigation measures were identified to minimize future project related biology resource impacts within the project area. With implementation of these mitigation measures, the project related biology resource impacts can be reduced or controlled to a less than significant impact level.

Cultural Resources: After detailed evaluation of the potential for the proposed project to impact cultural resources, the DEIR evaluation concluded that these impacts could be mitigated to a less than significant impact level. A total of four mitigation measures were identified to minimize future project related cultural resource impacts within the project area. With implementation of these mitigation measures, the project related cultural resource impacts can be reduced or controlled to a less than significant impact level.

Hydrology and Water Quality: After detailed evaluation of all hydrology/water quality issues in the DEIR, it was concluded that all hydrology and water quality impacts can be controlled to a less than significant impact level. Detailed assumptions regarding future wastewater management activities are included in this finding and a total of eight mitigation measures were identified to minimize future project related impacts. With implementation of these mitigation measures, hydrology and water quality impacts can be offset or otherwise mitigated, and the hydrology and water quality impacts (including those identified under Utilities and Services Systems) have been found to be less than significant, on a project specific and cumulative basis.

Noise: After detailed evaluation of the potential for the proposed project to impact the existing noise environment, the DEIR evaluation concluded that these impacts could be mitigated to a less than significant impact level. A total of eight mitigation measures were identified to minimize future project related noise impacts within the project areas. With implementation of these mitigation measures, the project related noise impacts can be reduced or controlled to a less than significant impact level.

Population and Housing: After detailed evaluation of the potential for the proposed project to impact population and housing the DEIR evaluation concluded that these impacts were less than significant without mitigation.

The analysis in the DEIR concluded that the proposed project (both WRPs and support facilities) can be implemented without causing significant adverse impacts on the environment. VVWRA concluded that the data, analysis and findings in Chapter 4 of the DEIR and the Technical Appendices in Volume 2 of the DEIR substantiate a finding that the proposed project can be implemented without causing project specific significant adverse environmental impacts or contributing to cumulatively considerable significant adverse environmental impacts. Refer to the detailed analysis in Chapter 4 and the Technical Appendices for the facts and findings supporting this conclusion.

1.6 ALTERNATIVES

The California Environmental Quality Act (CEQA) and the State CEQA Guidelines require an evaluation of alternatives to the proposed action. Section 15126 of the State CEQA Guidelines indicates that the "discussion of alternatives shall focus on alternatives capable of eliminating any significant adverse environmental effects or reducing them to a level of not significant...." In this case no environmental issues are identified as causing potential or actual significant adverse impacts if the project is implemented as proposed. The State Guidelines also state that "a range of reasonable alternatives to the project....which could feasibly attain the basic objectives of the project" and "The range of alternatives required in an EIR is governed by "rule of reason" that requires the EIR to set forth only those alternatives necessary to permit a reasoned choice." For this project, the four alternatives to the proposed project have been identified and evaluated, including the mandated No Project Alternative.

The potential for an alternative regional location for the project as a whole was evaluated and determined not to be feasible since the management of wastewater within the Victor Valley region cannot be accomplished at an alternative location. However, three alternatives for the proposed WRPs are considered for evaluation in addition to the No Project Alternative based on original design considerations, input from the public and the identification of a site specific constraint at one of the WRP sites. The first of these three alternatives is Alterative 2, which is an alternative location for the City of Hesperia Subregional WRP. The second alternative (Alternative 3) is a modified design for the WRPs that would incorporate a Reverse Osmosis (RO) treatment unit which could reduce concentrations of most of the water pollutants of concern in the treated effluent (recycled water). The final alternative considered is an alternative location for the Apple Valley WRP (Alternative 4).

Selecting an environmental superior alternative is complex in this instance because certain of the above alternatives have less impact in certain areas. The Hesperia Alternative 1 site was

found to be the least environmentally superior alternative because of increased air emissions and substantially greater biological resource impacts. The No Project Alternative results in other adverse impacts associated with continued reliance on the Westside Regional WRP and these impacts and their location (within portions of the Mojave River) were also determined to be less environmentally superior than the proposed project. The No Project Alternative was also determined to be infeasible because it would not meet project objectives. The Apple Valley Alternative location was concluded to avoid a mitigable impact (flood hazards) when compared to the proposed project, but was concluded to be a less feasible alternative and to pose more significant air pollution impacts. Finally, the use of a Reverse Osmosis (RO) treatment train at the WRPs was concluded to be environmentally superior for water quality purposes, but the proposed project's groundwater quality impacts were not identified as being significant, and the addition of a RO treatment train was concluded to provide no substantial environmental superiority to the proposed project.

1.7 SUMMARY TABLE OF IMPACTS

The DEIR Chapter 1 Environmental Impact Summary table (Table 1.5-1) follows. Also, please refer to Chapter 2 for the required discussion of areas of controversy associated with the proposed project (Subchapter 2.2.5) and a discussion of issues that remain to be resolved (Subchapter 2.2.4).

This page left intentionally blank for pagination purposes.

Table 1.5-1
SUMMARY OF IMPACTS AND MITIGATION MEASURES DISCUSSED IN THIS DRAFT EIR

Environmental Category / Issue	Impact Description	Mitigation Measures	Impact After Mitigation
Air Quality	Construction-related air pollutant emissions.	4.2-1 Water active grading sites and haul roads at least three times daily and when dust is observed migrating from the site. (Mandatory) 4.2-2 Pave or apply water three times daily, or apply non-toxic soil stabilizers on all unpaved access roads, parking areas, and staging areas. More frequent watering will occur if dust is observed migrating from the site during grading activities. (Mandatory) 4.2-3 Enclose, cover, or water twice daily, or apply non-toxic soil binders, to any onsite stockpiles of debris, dirt or other dusty material. (Mandatory) 4.2-4 Suspend all grading and excavation operations when wind speeds exceed 25 mph. (Mandatory) 4.2-5 Replace ground cover or pave disturbed areas immediately after construction is completed in the affected area. (Mandatory) 4.2-6 Hydro-seed, apply non-toxic chemical soil stabilizers or otherwise stabilize any cleared area which is to remain inactive for more than 10 days after clearing is completed. (Mandatory) 4.2-7 Cover all trucks hauling soil, sand and other loose materials on local paved roadways. (Mandatory) 4.2-8 Sweep or wash any site access points daily of any visible dirt deposition on any public roadway. (Mandatory) 4.2-9 Reduce and control traffic speeds on unpaved roads to less than 15 mph. (Mandatory)	With implementation of identified air quality mitigation measures, construction, emissions from future individual projects implemented in support of the VVWRA Town of Apple Valley Wastewater Reclamation Plant, City of Hesperia Wastewater Reclamation Plant, and Related Facilities are considered to be less than significant. Cumulative Subregional-related project construction emissions have a potential to exceed MDAQMD regional emission thresholds for NOx; however, implementation of the mandatory measures can reduce potential NOx emissions to the lowest achievable level. Thus, project-related construction air quality impacts are considered to result in a less than significant impact.

Table 1.5-1
SUMMARY OF IMPACTS AND MITIGATION MEASURES DISCUSSED IN THIS DRAFT EIR

Environmental Category / Issue	Impact Description	Mitigation Measures	Impact After Mitigation
Air Quality (continued)		4.2-10 Install sandbags or other erosion control measures to prevent silt runoff to public paved roadways. (Mandatory) 4.2-11 To the extent feasible, limit the area subject to excavation, grading and other construction activity at any one time. (Optional) 4.2-12 All equipment shall be properly tuned and maintained in accordance with manufacturer's specifications to minimize nitrogen oxide emissions. (Mandatory) 4.2-13 General contractors shall maintain and operate construction equipment so as to minimize exhaust emissions. (Mandatory) 4.2-14 Require 90-day low NOx tune-ups for off road equipment. (Mandatory) 4.2-15 Use Tier3-rated engines during site grading for all equipment exceeding 100 horsepower, if available. (Optional) 4.2-16 During construction, trucks and vehicles in loading and unloading queues would be kept with their engines off, when not in use, to reduce exhaust emissions. (Mandatory) 4.2-17 Limit allowable idling to 5 minutes for trucks and heavy equipment. (Mandatory) 4.2-18 Encourage car pooling for construction workers. (Optional) 4.2-19 Limit lane closures to off-peak travel periods, when possible. (Optional)	

Table 1.5-1
SUMMARY OF IMPACTS AND MITIGATION MEASURES DISCUSSED IN THIS DRAFT EIR

Environmental Category / Issue	Impact Description	Mitigation Measures	Impact After Mitigation
Air Quality (continued)		4.2-20 Park construction vehicles off traveled roadways, when possible). (Optional) 4.2-21 Encourage receipt of materials during non-peak traffic hours. (Optional)	
	Project-related operational emissions.	4.2-22 VVWRA shall establish a monitoring program to track Hesperia and Apple Valley Subregional facility operational electricity consumption. As part of this monitoring program, those non-GHG emitting electrical generation projects implemented by VVWRA shall be quantified to demonstrate the specific reductions in both criteria pollutants and GHG relative that which would occur from relying on electricity delivered by the Southern California Edison (SCE) grid. To the extent feasible and consistent with each agency's ability, an objective of offsetting criteria pollutant and GHG electricity consumption emissions by 50%, relative to reliance on the SCE grid, will be established. (Optional) 4.2-23 To the extent feasible, the VVWRA shall select landscaping that is fast-growing to create visual buffers at future Apple Valley and Hesperia Subregional facility sites to offset GHG emissions. Where landscaping is feasible, a landscape plan designed to initiate carbon sequestration and these plants shall be periodically harvested and/or replanted to maintain carbon sequestration. Alternatively, these agencies may choose to purchase annual or permanent carbon credits from the available carbon banks at the time that a facility begins operation. (Optional)	With implementation of identified air quality mitigation measures, operational emissions from future individual projects implemented in support of the VVWRA Town of Apple Valley Wastewater Reclamation Plant, City of Hesperia Wastewater Reclamation Plant, and Related Facilities are considered to be less than significant. In addition, the optional measures can also reduce long-term criteria and GHG emissions relative to the levels forecast for these facilities.

Table 1.5-1
SUMMARY OF IMPACTS AND MITIGATION MEASURES DISCUSSED IN THIS DRAFT EIR

Environmental Category / Issue	Impact Description	Mitigation Measures	Impact After Mitigation
Air Quality (continued)		4.2-24 To the extent feasible, VVWRA shall select electrical equipment for future Apple Valley and Hesperia Subregional project that minimize electricity consumption. Documentation of such efforts shall be retained in project files to verify that electricity consumption of such equipment has been given consideration before selecting a specific piece of equipment, such as a booster pump. This measure is not intended to dictate selection of equipment that minimizes electricity consumption, only to ensure that this criterion is clearly given consideration in the selection of such equipment. Where electricity savings are achieved they shall be documented. (Optional)	
Biological Resources / Land Use & Planning	Subregional-related future site-specific projects have a potential to adversely impact listed and sensitive plant and animal species located within the project area.	<u>Burrowing Owl and Desert Tortoise</u> 4.3-1 Prior to, and, within 30 days of the start of any land disturbance activities, at all project locations, except those bounded by man-made facilities on all sides (such as a roadway through a residential subdivision), a qualified biologist shall conduct focused surveys to determine if desert tortoise or burrowing owl have migrated into the project area of potential effect (APE). If either species is encountered, land disturbance activities shall not commence until the biologist has implemented appropriate measures according to the CDFG and USFWS to clear the site for construction. 4.3-2 A biologist/monitor shall be present at the site during initial land disturbance activities. The biologist/monitor shall remain on-call during construction activities in developed roads. If tortoise or burrowing owls are encountered during construction, construction activities shall be halted in the vicinity of the find and the biologist/monitor called to the site. The contractor shall implement the recommendations of the biologist/monitor.	The DEIR evaluation reached a finding that with mitigation the future potential site specific Subregional project impacts to biological resources, including burrowing owl and desert tortoise are considered to be less than significant with mitigation.

Table 1.5-1
SUMMARY OF IMPACTS AND MITIGATION MEASURES DISCUSSED IN THIS DRAFT EIR

Environmental Category / Issue	Impact Description	Mitigation Measures	Impact After Mitigation
Biological Resources / Land Use & Planning (continued)		4.3-3 All personnel associated with the construction on the site shall attend a worker education class. This class shall include general information regarding the MGS, desert tortoise, and burrowing owl; relevant Federal and State laws; and worker responsibilities when working in Mojave desert habitat. <u>Mohave ground squirrel</u> 4.3-4 Permanent impacts to the acreage west of I-15 disturbed in support of the proposed Hesperia Alternative A Subregional WRP facilities shall assume presence of MGS and loss of an unquantified amount of occupied MGS habitat will occur as a result of the project. a. The project proponent shall provide compensation for permanent impacts to MGS habitat by protecting in perpetuity (through property or mitigation bank credit acquisition) habitat for the sensitive species at a ratio of not less than 1:1 (protected: destroyed.) The mitigation property may be acquired by purchase of mitigation credits in a mitigation bank acceptable to the regulatory agencies, purchase of occupied habitat in the project area, or rehabilitation of degraded habitat adjacent to known occupied habitat. b. The project proponent will provide an endowment, to be determined at the time the impact is quantified, adequate to fund ongoing management requirements for the property purchased or rehabilitated. c. Temporary impacts of habitat are proposed to be mitigated by appropriate revegetation to be approved by the agencies.	

Table 1.5-1
SUMMARY OF IMPACTS AND MITIGATION MEASURES DISCUSSED IN THIS DRAFT EIR

Environmental Category / Issue	Impact Description	Mitigation Measures	Impact After Mitigation
Biological Resources / Land Use & Planning (continued)		4.3-4 (cont.) d. If required by the Agencies, precautionary mitigation measures will include exclusionary fence placement around construction in areas where MGS are documented to occur to be maintained for the duration of project construction activities. The fenced area will be trapped for MGS, and all MGS will be removed from inside the fenced, relocated to outside of the fenced area and all rodent burrows collapsed within the disturbed area. Night lighting may have an indirect effect on adjacent habitat and any night lighting shall be focused on the immediate area of construction and night lighting shall be limited in time to the minimum night construction essential to support the project. e. The final mitigation may differ from the above values based on negotiations between the project proponent and CDFG for an incidental take permit (2081 Permit). The project proponent shall retain a copy of the incidental take permit as verification that the mitigation of MGS impacts at a project site has been accomplished. The VVWRA concludes that this is sufficient mitigation for loss of habitat and impacts to MGS as a result of the project. If the regulatory permitting agency(ies) issue permits for this project that specify a different mitigation than provided in this measure, the VVWRA will ensure implementation of such mitigation as long as it is equivalent to or not less than that specified in this measure.	

Table 1.5-1
SUMMARY OF IMPACTS AND MITIGATION MEASURES DISCUSSED IN THIS DRAFT EIR

Environmental Category / Issue	Impact Description	Mitigation Measures	Impact After Mitigation
Biological Resources / Land Use & Planning (continued)		Nesting Birds 4.3-5 To avoid an illegal take of active bird nests, any grubbing, brushing or tree removal will be conducted outside of the State identified nesting season of February 15 through September 1. Alternatively, project impact areas will be evaluated by a qualified biologist prior to initiation of ground disturbance to determine the presence or absence of nesting birds. Rivers, Streambeds, or Wetlands 4.3-6 Prior to discharge of fill or streambed alteration of either of the channels along the project alignment, the VVWRA shall obtain regulatory permits from the U.S. Army Corps of Engineers, Santa Ana Regional Water Quality Control Board and the CDFG, where required. Mitigation can be provided by purchasing into any authorized mitigation bank; by selecting a site of comparable acreage near the site and enhancing it with a native riparian habitat or invasive species removal in accordance with a habitat mitigation plan approved by regulatory agencies; or by acquiring sufficient compensating habitat to meet regulatory agency requirements. Typically, regulatory agencies require mitigation for jurisdictional waters without any riparian or wetland habitat to be mitigated at a 1:1 ratio. For loss of any riparian or other wetland areas, the mitigation ratio will begin at 2:1 and the ratio will rise based on the type of habitat, habitat quality, and presence of sensitive or listed plants or animals in the affected area. A revegetation plan using native riparian vegetation common to the project area shall be prepared and reviewed and approved by the appropriate regulatory agencies. The agencies can impose greater mitigation requirements in their permits, but the VVWRA will utilize the ratios outlined above as the minimum required to offset or compensate for impacts to jurisdictional waters, riparian areas or other wetlands.	

Table 1.5-1
SUMMARY OF IMPACTS AND MITIGATION MEASURES DISCUSSED IN THIS DRAFT EIR

Environmental Category / Issue	Impact Description	Mitigation Measures	Impact After Mitigation
Biological Resources / Land Use & Planning (continued)		<u>Local Plants</u> 4.3-7 In the event that one of the sensitive plant species identified in the CNDDB is positively identified on site, during construction, the plant will be flagged and avoided until the CDFG is notified and takes their opportunity to salvage the plant. 4.3-8 As required by the San Bernardino County plant protection Ordinance (or City or Town ordinances), the project proponents shall develop a cactus relocation plan to offset impacts to Joshua trees and other cactus species that may need to be removed as part of this project. This plan will identify the number and species of cactus to be protected in place or removed and relocated. <u>Desert tortoise and Mohave ground squirrel</u> 4.3-9 Following the pre-construction survey, a qualified biologist will make a determination: (1) if a biological monitor shall be present at the site during all land disturbance activities; (2) if desert tortoise fencing needs to be installed around the perimeter of the construction work zone; or (3) if no further action is required. a. If a desert tortoise is encountered during construction, no person including the biologist will touch the animal. Instead, the biologist will observe the area to see if the desert tortoise has an established burrow or if it is just wandering through the site. If it is clearly just moving through the site, all construction activity near the tortoise will cease until it is safely out of the area. The biologist will contact the USFWS and CDFG to coordinate with them for further instruction. At that time it may be appropriate to erect exclusionary fencing to prevent the re-entry of the desert tortoise back into the site. If the biologist finds that the desert tortoise is residing in a burrow on site,	

Table 1.5-1
SUMMARY OF IMPACTS AND MITIGATION MEASURES DISCUSSED IN THIS DRAFT EIR

Environmental Category / Issue	Impact Description	Mitigation Measures	Impact After Mitigation
Biological Resources / Land Use & Planning (continued)		4.3-9 (cont.) then all construction must cease until the USFWS and CDFG have issued take authority to relocate the tortoise out of the area in the vicinity of the burrow. In this case, land disturbance activities shall not commence until the biologist has implemented the required measures according to the CDFG and USFWS to clear the site for construction. b. The biologist/monitor shall remain on-call during construction activities. If a desert tortoise is encountered during construction following the initial phases of ground disturbance, construction activities shall be halted in the vicinity of the find and the biologist/monitor called to the site. The contractor shall implement the recommendations of the biologist/monitor. Implementation of the above measures is protective of the environment. Should the regulatory agencies determine an alternative, equivalent mitigation program during acquisition of regulatory permits, such measure shall be deemed equivalent to the above measures and no additional environmental documentation shall be required to implement a measure different than outlined above. 4.3-10 Within 30 days of the start of any land disturbance activities, a qualified biologist shall survey the site to determine if burrowing owls are present and nesting in the construction area. If burrowing owl are encountered and determined to be nesting, land disturbance activities shall not commence until the biologist has implemented the required measures according to the CDFG to clear the site for construction. One such measure may be to passively relocate the owls once the young have fledged the nest. This type of relocation requires the construction of artificial burrows in the near vicinity and collapsing of	

Table 1.5-1
SUMMARY OF IMPACTS AND MITIGATION MEASURES DISCUSSED IN THIS DRAFT EIR

Environmental Category / Issue	Impact Description	Mitigation Measures	Impact After Mitigation
Biological Resources / Land Use & Planning (continued)		4.3-10 (cont.) the old burrows once the owls have clearly flushed out of the site. If burrowing owls are encountered during construction, construction activities shall be halted in the vicinity of the find and the biologist/monitor called to the site. The contractor shall implement the recommendations of the biologist/monitor. 4.3-11 All project activities will be limited to a well-defined and visually delineated area. Prior to grading and construction activities, the limits of disturbance will be clearly marked with flagging, stakes, or fencing. 4.3-12 All project construction activities shall implement measures to minimize the potential to introduce invasive plant species into construction sites. This shall be accomplished by requiring the contractor to verify that construction equipment used at the WRP facility sites have been washed to minimize introduction of invasive plant species. Also, following construction activities, VVWRA shall monitor and remove invasive plant species until disturbed areas at all facilities are revegetated with native species or covered with hardscape, such as paving, gravel cover, etc.	
Cultural Resources	Potential cultural and paleontological resource impacts from construction and installation of the two Subregional WRPs and support facilities.	4.4-1 If unknown buried cultural or paleontological resources are discovered during project construction, all work in the area of the find shall cease, and a qualified archaeologist or paleontologist shall be retained by the project sponsor to investigate the find, and to make recommendations on its disposition. The VVWRA shall implement the archaeologist's recommendations as long as the cost does not exceed professional norms.	With implementation of mitigation, potential impacts to cultural and paleontological resource from Subregional-related activities are considered to be less than significant. Based on these measures, the proposed project is not forecast to result in cumulatively considerable impacts.

Table 1.5-1
SUMMARY OF IMPACTS AND MITIGATION MEASURES DISCUSSED IN THIS DRAFT EIR

Environmental Category / Issue	Impact Description	Mitigation Measures	Impact After Mitigation
Cultural Resources (continued)		4.4-2 If human remains are encountered during construction, all work shall cease and the San Bernardino County Coroner's Office shall be contacted pursuant to procedures set forth in Section 7050.5 of the Health and Safety Code. The VVWRA shall be notified and actions to manage the remains shall be documented in a report to the VVWRA. 4.4-3 VVWRA shall arrange to have a professional archaeologist monitor all trenching, excavation and other earth-moving activities in the Apple Valley portion of the APE. The archaeologist shall ensure proper and timely evaluation and treatment of any cultural resource materials unearthed in this area. If any cultural resources are encountered during construction monitoring, a professional report detailing findings from the management activities shall be prepared under Authority direction and retained. 4.4-4 Prior to any planned construction activities at the future Eastside WRP site, a focused cultural resources survey shall be conducted to determine if any "historic properties" or "historical resources" are present within the project site that may be adversely affected by construction of the Eastside WRP.	
Hydrology / Water Quality	Potential erosion sedimentation impacts from construction and maintenance of the two Subregional WRPs and support facilities.	4.5-1 The construction contractor shall prepare and implement a Storm Water Pollution Prevention Plan (SWPPP) which specifies Best Management Practices that will be implemented to prevent construction pollutants from contacting stormwater with the intent of keeping all products of erosion from moving offsite. The SWPPP shall be developed with the goal of achieving a reduction in pollutants both during and following construction to control urban runoff to the maximum extent practicable based on available, feasible best management practices. The SWPPP and the monitoring program for the	With implementation of mitigation, the impacts to hydrology and water quality from implementing the VVWRA Subregional WRP Project are considered to be less than significant.

Table 1.5-1
SUMMARY OF IMPACTS AND MITIGATION MEASURES DISCUSSED IN THIS DRAFT EIR

Environmental Category / Issue	Impact Description	Mitigation Measures	Impact After Mitigation
Hydrology / Water Quality (continued)		4.5-1 (cont.) construction projects shall be consistent with the requirements of the latest version of the State's General Construction Activity Storm Water Permit and NPDES Permit No. CAS618036, Order No. R8-2002-0012 for projects within San Bernardino County. The following items should be included in the SWPPP: • The length of trenches which can be left open at any given time should be limited to that needed to reasonably perform construction activities. This will serve to reduce the amount of backfill stored onsite at any given time. • Backfill material should not be stored in areas which are subject to the erosive flows of water. • Measures such as the use of straw bales, sandbags, silt fencing or detention basins shall be used to capture and hold eroded material for future cleanup. • Rainfall will be prevented from entering material and waste storage areas and pollution-laden surfaces. • Construction-related contaminants will be prevented from leaving the site and polluting waterways. • Replanting and hydroseeding of native vegetation will be implemented to reduce slope erosion and filter runoff. • A spill prevention control and remediation plan to control release of hazardous substances.	

Table 1.5-1
SUMMARY OF IMPACTS AND MITIGATION MEASURES DISCUSSED IN THIS DRAFT EIR

Environmental Category / Issue	Impact Description	Mitigation Measures	Impact After Mitigation
Hydrology / Water Quality (continued)		4.5-2 The site design for Subregional WRP Project facilities shall prepare and implement a Water Quality Management Plan (WQMP) which specifies Best Management Practices that will be implemented to prevent long-term surface runoff from discharge of pollutants from sites on which construction has been completed. The WQMP shall be developed with the goal of achieving a reduction in pollutants following construction to control urban runoff pollution to the maximum extent practicable based on available, feasible best management practices.	
	Exposure of Subregional WRP facilities to flood hazards or generation of downstream flood hazards due to increased runoff from Subregional WRP facilities.	4.5-3 Any future Subregional WRP Project facilities that will be installed at a location where flood hazards may occur, must be hardened to withstand the defined flood hazard so that the facility can continue to operate or be available to be placed into immediate operation following the flooding.	
		4.5-4 For long-term mitigation of site disturbances at Subregional WRP facility locations, all areas not covered by structures shall be covered with hardscape (concrete, asphalt, gravel, etc.), native vegetation and/or man-made landscape areas (for example, grass). Revegetated or landscaped areas shall provide sufficient cover to ensure that, after a two year period, erosion will not occur from concentrated flows (rills, gully, etc.) and sediment transport will be minimal as part of sheet flows.	
		4.5-5 Within each facility or project associated with the Subregional WRP Project that will impact more than one acre, surface runoff from upstream shall be collected and discharged in a manner downstream of the site that does not increase downstream flood hazards. Onsite surface runoff shall be collected and retained (for use onsite) or detained and percolated into the ground on the site such that site development results in no net increase in offsite	

Table 1.5-1
SUMMARY OF IMPACTS AND MITIGATION MEASURES DISCUSSED IN THIS DRAFT EIR

Environmental Category / Issue	Impact Description	Mitigation Measures	Impact After Mitigation
Hydrology / Water Quality (continued)		4.5-5 (cont.) stormwater flows. Detainment shall be achieved through Low Impact Development techniques whenever possible, and shall include techniques that remove the majority of urban storm runoff pollutants, such as petroleum products and sediment. The purpose of this measure is to remove the onsite contribution to cumulative urban storm runoff and ensure the discharge from the sites is treated to reduce contributions of urban pollutants to downstream flows and to groundwater. If it is not possible to eliminate stormwater flows from leaving a site, the facility shall not be constructed until a drainage study has been conducted that verifies that there will be no adverse impacts to downstream stormwater management from implementation of the site development.	
	Contingency mitigation measures to address potential groundwater quality impacts even though not forecast to occur in the water quality impact forecast.	4.5-6 Under no circumstance shall discharge of recycled water cause or contribute to a cumulative violation of the 2005 Basin Plan maximum benefit objectives or interfere with a designated beneficial use for a water or groundwater body. In addition to monitoring, the VVWRA will use models to forecast future TDS and Nitrate concentrations pursuant to the Basin Plan and Title 22 permit requirements. VVWRA will, based on monitoring, begin the planning to develop measures to either protect beneficial uses of groundwater or to treat groundwater to meet beneficial use requirements if a violation appears imminent. 4.5-7 Hydrogeologic studies, including modeling, will be completed for each percolation basin site to define the impacts from percolating the recycled water on known groundwater quality. If modeling demonstrates that contamination of a downstream well associated with such percolation expansion will adversely impact groundwater	

Table 1.5-1
SUMMARY OF IMPACTS AND MITIGATION MEASURES DISCUSSED IN THIS DRAFT EIR

Environmental Category / Issue	Impact Description	Mitigation Measures	Impact After Mitigation
Hydrology / Water Quality (continued)		4.5-7 (cont.) or water production capabilities, the recharge facility shall be closed and moved to an alternative location where such impacts will not occur or other adaptive management programs shall be implemented. 4.5-8 All water recharge operations shall be monitored, and if impacts that were not forecast to occur as a result of recycled water recharge operations cause unexpected significant adverse impact on the groundwater aquifer, the recharge operations shall be terminated or modified to eliminate the adverse impact.	
Noise	Potential noise impacts from construction and operation of the two Subregional WRPs and support facilities.	4.6-1 Construction shall be limited to the hours of 7 a.m. to 7 p.m. on Monday through Friday, and between 9 a.m. to 6 p.m. on Saturday, and shall be prohibited on Sundays and federal holidays, or as defined in local noise ordinances. Exceptions are for water pumping from wet areas or declared emergency circumstances. (Mandatory) 4.6-2 All construction vehicles and fixed or mobile equipment shall be equipped with properly operating and maintained mufflers. (Mandatory) 4.6-3 All employees that will be exposed to noise levels greater than 75 dB over an 8-hour period shall be provided with adequate hearing protection devices to ensure no hearing damage will result from construction activities. (Mandatory) 4.6-4 If equipment is being used that can cause hearing damage at adjacent noise receptor locations (distance attenuation shall be taken into account), portable noise barriers shall be installed that are demonstrated to be adequate to reduce noise levels at receptor locations below hearing damage thresholds. (Optional)	With implementation of identified noise mitigation measures, all potential adverse impacts to the existing noise environment are considered to be less than significant.

Table 1.5-1
SUMMARY OF IMPACTS AND MITIGATION MEASURES DISCUSSED IN THIS DRAFT EIR

Environmental Category / Issue	Impact Description	Mitigation Measures	Impact After Mitigation
Noise (continued)		4.6-5 All production lift stations or booster pumps shall have their noise levels attenuated to 50 dBA CNEL at the adjacent property boundary, when noise sensitive uses occur on such property, or in accordance with a local noise ordinance. This measure is a modification to 4.11-5 from the OBMP PEIR. (Mandatory) 4.6-6 Schedule the construction such that the minimum number of pieces of equipment will be operating at the same time. (Optional) 4.6-7 Utilize construction methods or equipment that will provide the lowest level of noise impact, i.e., use newer equipment that will generate lower noise levels. (Optional) 4.6-8 Maintain good relations with the local community where construction is scheduled, such as keeping people informed of the schedule, duration, and progress of the construction, to minimize the public objections of unavoidable noise. Communities should be notified in advance of the construction and the expected temporary and intermittent noise increases during the construction period. (Optional)	
Population and Housing	Potential impacts to population growth within the Subregional WRPs service areas and potential impacts to existing housing resources.	No mitigation	Less than significant impact

CHAPTER 2 – INTRODUCTION

2.1 BACKGROUND

The Victor Valley Wastewater Reclamation Authority (VVWRA) will serve as the Lead Agency under the California Environmental Quality Act (CEQA) and has prepared this Environmental Impact Report (EIR) that evaluates the potential significant environmental impacts that may result from constructing and operating two new subregional wastewater reclamation facilities in the Victor Valley: the Town of Apple Valley Wastewater Reclamation Plant and the City of Hesperia Wastewater Reclamation Plant, and Related Facilities. The wastewater would be captured upstream of the existing VVWRA Westside Wastewater Reclamation Plant (WRP) and be treated to meet Title 22 standards. The recycled water produced from the two proposed WRPs could be used for landscape irrigation, industrial operations and recharge to the regional groundwater aquifer in the Alto Subbasin of the Mojave River Basin. These components of the Project are further summarized below, and presented in detail in Chapter 3.

The proposed Town of Apple Valley WRP would be located on the north side of Otoe Road, just east of Quantico Road at the southwest corner of Brewster Park in the Town of Apple Valley at an elevation of approximately 2,909 feet above mean sea level. The WRP site is adjacent to the existing Otoe Road Lift Station, connecting to the existing sanitary sewer, which would be modified as part of the proposed project. There are two alternative locations for the percolation ponds that would receive residual recycled water for recharge to the regional groundwater aquifer. The percolation ponds in Alternative 1 would be located north of Waalew Road between Navajo Road (east of) and Carmel Lane. The Alternative 2 percolation pond location is proposed for a site north of Papago Road, east of Navajo Road, west of Temecula Road, centered just north of the intersection of Navajo Road and Carmel Road. Refer to Figure 3-3 in Chapter 3.

The City of Hesperia has proposed two alternative locations for its WRP. Alternative A is located west of Interstate 15 (I-15). The specific proposed location of the WRP is located north of Main Street, south of Yucca Terrace Drive, and west of Catawba Road, along a westward extension of Acacia Road. Figure 3-6 shows the WRP Alternative A location on an aerial photo of the area. The lift station proposed to serve both WRP alternatives occupies the same location. The proposed location is shown on Figures 3-5, 3-6, and 3-7. A sewer main presently follows the alignment of Maple Avenue (see Figure 3-6). The proposed lift station site is located just west of Maple on the south side of Mojave Street, west of Tamarisk. A short gravity flow sewer would connect the existing sewer main in Maple to the lift station site on Mojave, as shown on Figure 3-7.

The City of Hesperia WRP B site (preferred alternative reclamation plant site) is proposed to be located on the north side of Mojave Street, just west of Tamarisk Avenue approximately one half mile west of Maple Avenue in the City of Hesperia at an elevation of approximately 3,343 feet above mean sea level. Figure 3-7 shows the proposed WRP B site on an aerial photograph and Figure 3-8 shows the location on a portion of the USGS – Hesperia Quadrangle, 7.5 Minute Series topographic map.

2.2 SUMMARY PROJECT DESCRIPTION

VVWRA envisions the facilities described in detail in Chapter 3 as part of a recycled water program. This program is anticipated to be implemented over an extended period of up to 10 years. As funding becomes available during this period, the Town of Apple Valley and the City of Hesperia WRPs will be installed and begin operation with 1.0 MGD average flow of tertiary treatment capability. The recycled water will be utilized for landscape irrigation and industrial applications, and excess recycled water would be delivered to percolation ponds for recharge (percolation and possible future aquifer storage and recovery (ASR) wells) to the regional groundwater aquifer. As part of this overall recycled water program, a future WRP is also envisioned at the Eastside WRP site with the same initial capacity. As additional wastewater is generated and additional recycled water users are identified in the future, these WRPs may have their treatment capacity expanded in phases up to a maximum of 4.0 MGD average flow as currently envisioned. Expansion beyond this capacity is not anticipated or evaluated in this document. At this time no specific evaluation of a WRP is proposed at the Eastside WRP site, only an environmental constraints analysis.

2.3 PURPOSE AND USE OF AN EIR

The California Environmental Quality Act (CEQA) was adopted to assist with the goal of maintaining the quality of the environment for the people of the State. Compliance with CEQA, and its implementing guidelines, requires that an agency making a decision on a project must consider its potential environmental effects/impacts before granting any approvals or entitlements. Further, the state adopted a policy "that public agencies should not approve projects as proposed if there are feasible alternatives or feasible mitigation measures available which would substantially lessen the significant environmental effects of such projects." Thus, an agency, in this case the VVWRA, must examine feasible alternatives and identify feasible mitigation measures as part of the environmental review process. CEQA also states "that in the event specific economic, social, or other conditions make infeasible such project alternatives or such mitigation measures, individual projects may be approved in spite of one or more significant effects thereof." (§21002, Public Resources Code)

When applied to a specific project, such as the installation and operation of the Apple Valley and Hesperia WRPs, the reviewing agency, the VVWRA, is required to identify the potential environmental impacts of the project and where potential significant impacts are identified the agency must determine whether there are feasible mitigation measures or alternatives that can be implemented to avoid or substantially lessen significant environmental effects of the project. The first step in this process, completion of an Initial Study to determine whether an EIR is required, has been completed for the proposed project. Based on the information in the Initial Study, VVWRA concluded that the project proposed might cause significant impacts to the following issues that would require further analysis in an EIR: air quality, biological resources, cultural resources, hydrology/water quality, land use/planning, noise, population/growth inducement, and utilities/service systems.

Based on the findings in the Initial Study, see discussions in Section IV (Environmental Factors Potentially Affected) and Section VII (Impact Assessment Checklist & Discussion), the VVWRA has concluded that an Environmental Impact Report (EIR) will be prepared for the proposed project.

The VVWRA prepared and circulated a Notice of Preparation (NOP) for the project. The NOP review period began on May 27, 2010 and ended 32 days later, June 28, 2010. Respondents were requested to send their suggestions for and comments on environmental information and issues that should be addressed in the Draft EIR (DEIR) no later than 32 days after receipt of the NOP. The NOP was distributed to interested agencies and the State Clearinghouse. Eight (8) letter responses to the NOP were submitted. A copy of the Initial Study is provided in Appendix 8-1 of this Draft Environmental Impact Report (DEIR). A copy of the Notice of Preparation and the eight (8) letters are included in Subchapter 8.2 and responses to these comment letters are included in the following text.

No new issues were raised for consideration in the DEIR. This DEIR has been prepared to address the issues identified above and further discussed below to provide an informational document intended for use by the VVWRA, interested and responsible agencies and parties, and the general public in evaluating the potential environmental effects of implementing this proposed Project. As noted, a copy of the Initial Study is attached as Subchapter 8.1 in Chapter 8 and a copy of the NOP and comment letters are provided in Chapter 8, Subchapter 8.2 of this DEIR.

CEQA requires that the VVWRA, the CEQA Lead Agency, consider the environmental information in the project record, including this DEIR, prior to making a decision on the proposed project. The decision that will be considered by VVWRA is whether to approve the above described capital improvement projects as envisioned by this proposed project and in conjunction with the Town of Apple Valley and City of Hesperia. Alternatively, VVWRA can reject the project as proposed. This DEIR evaluates the environmental effects as outlined above.

The VVWRA will serve as the CEQA Lead Agency pursuant to the State CEQA Guidelines Section 15015(b)(1). This DEIR has been prepared by Tom Dodson & Associates (TDA) under the direction of the VVWRA. TDA was retained to assist VVWRA to perform the independent review of the project required by CEQA before the DEIR is released. The VVWRA has reviewed the content of the DEIR and concurs in the conclusions and findings contained herein.

2.2.1 Summary of Responses to the NOP

The following is a summary of the content of the comment letters submitted in response to the NOP and the VVWRA responses:

- ***Response Letter #1 from the State Clearinghouse, May 27, 2010***

Comment 1: The comment letter from the State Clearinghouse indicates that the Notice of Preparation (NOP) was distributed to appropriate State agencies for review and comment.

Response: Your comment is noted and is hereby incorporated into the administrative record that will be used by the project decision-makers when a decision is reached on this proposed project.

- ***Response Letter #2 from State Water Resources Control Board, June 15, 2010***

Comment 1: The Board Staff acknowledge that the Authority may pursue funding from the Clean Water State Revolving Fund (SWSRF) for the proposed project and provides information on the type of information required to meet the Board's unique CEQA requirements.

Response: Your comment is noted and is hereby incorporated into the administrative record that will be used by the project decision-makers when a decision is reached on this proposed project. The specific technical evaluations, such as biological and cultural resources, have been prepared to meet the requirements of the Board's "CEQA-Plus" program.

Comment 2: This comment requests notification regarding future meetings/hearings and anticipates reviewing the DEIR. Specific documentation is requested.

Response: All data and documentation requested will be provided to the Board Staff.

Comment 3: This comment describes the Board's CEQA Plus program and the type of information required to meet these requirements, including consultation with federal agencies.

Response: Your comment is noted and is hereby incorporated into the administrative record that will be used by the project decision-makers when a decision is reached on this proposed project. The specific technical evaluations, such as biological and cultural resources, have been prepared to meet the requirements of the Board's "CEQA-Plus" program.

Comment 4: This comment indicates that projects that receive CWSRF funding commitments must meet the requirements of the U.S. Fish and Wildlife Service (USFWS) and the Federal Endangered Species Act.

Response: Please refer to Subchapter 4.2 and Volume 2, Technical Appendices, for the biology data and findings for the proposed project. These two sections of the document provide the information necessary to meet the requirements of the USFWS.

Comment 5: This comment indicates that projects that receive CWSRF funding commitments must meet the requirements of Section 106 of the National Historic Preservation Act and the State Historic Preservation Officer (SHPO).

Response: Please refer to Subchapter 4.3 and Volume 2, Technical Appendices, for the cultural resources data and findings for the proposed project. These two sections of the document provide the information necessary to meet the requirements of Section 106 and the SHPO.

Comment 6: This comment provides additional information regarding the type and extent of cultural resources information required, including consultation with Native Americans

Response: *Please refer to Subchapter 4.3 and Volume 2, Technical Appendices, for the cultural resources data and findings for the proposed project. These two sections of the document provide the information necessary to meet the requirements of Section 106 and the SHPO. The additional information is provided in these sections of the DEIR*

Comment 7: This comment indicates no further comments.
Response: *Your comment is noted and is hereby incorporated into the administrative record that will be used by the project decision-makers when a decision is reached on this proposed project.*

- ***Response Letter #3 from the Department of Transportation, District 8, June 15, 2010***

Comment 1: This letter is from the Caltrans District 8 and indicates that they understand that the Alternative A WRP will require the project to obtain an Encroachment Permit to cross Interstate 15.
Response: *Your comment is noted and is hereby incorporated into the administrative record that will be used by the project decision-makers when a decision is reached on this proposed project. If Alternative A is selected, required permits from Caltrans will be obtained.*

Comment 2: This comment indicates no further comments unless the project is modified.
Response: *Your comment is noted and is hereby incorporated into the administrative record that will be used by the project decision-makers when a decision is reached on this proposed project.*

Comment 3: This comment provides a future point of contact.
Response: *Your comment is noted and is hereby incorporated into the administrative record that will be used by the project decision-makers when a decision is reached on this proposed project.*

- ***Response Letter #4 from Apple Valley Ranchos Water Company, June 17, 2010***

Comment 1: This comment requests an extension of the NOP comment period to July 30, 2010.
Response: *Comment letter #5 contains an e-mail response to this letter granting an extension of the NOP comment period to July 13, 2010.*

- ***Response #5 an e-mail from VVWRA to Apple Valley Ranchos Water Company extending the NOP comment, June 17, 2010***

Comment 1: This comment contains an e-mail from Logan Olds, General Manager, to Apple Valley Ranchos Water Company extending the comment period to July 13, 2010.
Response: *None Required*

- ***Response Letter #6 from Department of Water Resources, June 24, 2010***

Comment 1: DWR expressed concern for the Alternative A Hesperia WRP site location due to sediment deposition at culverts at the State Water Project California Aqueduct.
Response: Your comment is noted and is hereby incorporated into the administrative record that will be used by the project decision-makers when a decision is reached on this proposed project.

Comment 2: This comment expresses no objection to the Hesperia Alternative B location on Mojave Street.
Response: Your comment is noted and is hereby incorporated into the administrative record that will be used by the project decision-makers when a decision is reached on this proposed project.

Comment 3: This comment identifies concerns for the Option A wastewater pipeline crossing the Aqueduct. If such crossing is required, DWR identifies specific policy requirements that must be fulfilled.
Response: Mitigation is included in the hydrology section to address these special requirements for crossing the Aqueduct under the Hesperia Alternative A.

Comment 4: This comment identifies the need for a DWR Encroachment Permit for any construction work within the DWR right-of-way.
Response: VVWRA will obtain encroachment permits from DWR if any construction activities are proposed within DWR's right-of-way

Comment 5: DWR offers to facilitate a field examination of the wastewater pipeline crossing alternatives with VVWRA Staff and consultants.
Response: VVWRA appreciates the offer and may seek a meeting with DWR in the field.

Comment 6: DWR requests copies of subsequent environmental documentation when available.
Response: Copies of the DEIR are being provided to DWR.

- ***Response Letter #7 from California Regional Water Quality Control Board Lahontan Region, July 1, 2010***

Comment 1: The Regional Board acknowledges receipt of the NOP and attendance at one of the project scoping meetings (June 15, 2010).
Response: Your comment is noted and is hereby incorporated into the administrative record that will be used by the project decision-makers when a decision is reached on this proposed project.

Comment 2: This comment summarizes both the proposed project and the operations at the Westside WRP (Regional Facility)
Response: The summary of the proposed project is accurate.

Comment 3: This comment references the Basin Plan and requests that the DEIR address the applicable portions of the Plan with a focus on compliance with the applicable numeric, narrative water quality objectives, and prohibitions.

Response: The evaluation of the applicable portions of the Basin Plan is provided in Subchapter 4.5 and the Volume 2, Hydrology Technical Appendices.

Comment 4: This comment identifies the water quality issues that the Board indicates must be addressed in the EIR.

Response: The evaluation of the applicable water quality issues is provided in Subchapter 4.5 and the Volume 2, Hydrology Technical Appendices.

Comment 5: This comment requests that methods of control measures to minimize plant upsets or accidental discharges of untreated wastewater or other chemicals be addressed in the EIR.

Response: The evaluation of the methods of control measures to minimize plant upsets and accidental dischargers is provided in Subchapter 4.5 and the Volume 2, Hydrology Technical Appendices.

Comment 6: This comment identifies the potential impacts from managing sewage solids that the Board indicates must be addressed in the EIR.

Response: The evaluation of the impacts from managing sewage solids is provided in Subchapter 4.5 and the Volume 2, Hydrology Technical Appendices.

Comment 7: This comment requests detailed information on how compliance with Title 22 will be achieved, including information that can be incorporated into the Salt and Nutrient Management Plan being developed for the Alto Subbasin and native water quality in the Subbasin.

Response: The evaluation of Title 22 compliance and effects on native groundwater quality is provided in Subchapter 4.5 and the Volume 2, Hydrology Technical Appendices.

Comment 8: This comment identifies the Mojave Hydrologic Unit Prohibition No. 4 prohibition and discusses the exemption criteria language as it will apply to the proposed project and indicates this issue must be addressed in the EIR.

Response: The evaluation of this prohibition and exemption criteria is provided in Subchapter 4.5 and the Volume 2, Hydrology Technical Appendices.

Comment 9: This comment identifies project's potential to adversely impact the riparian habitat downstream of VVWRA's regional facility and the specific topics that the Board indicates must be addressed in the EIR.

Response: The evaluation of the project effects on riparian habitat downstream of the Regional Plant is provided in Subchapters 4.3 and 4.5 and the Volume 2, Biology and Hydrology Technical Appendices.

Comment 10: This comment identifies the potential water quality and hydrology impacts to groundwater in the vicinity of the percolation ponds and the issues that the Board indicates must be addressed in the EIR.

Response: *The evaluation of the site specific sedimentary and ground water characteristics and issues related to percolation is provided in Subchapter 4.5 and the Volume 2, Hydrology Technical Appendices.*

Comment 11: This comment identifies the types of changes to the above water quality and hydrology issues that the Board indicates must be addressed in the EIR.

Response: *The evaluation of the types of changes to water quality and hydrology issues at the potential percolation sites is provided in Subchapter 4.5 and the Volume 2, Hydrology Technical Appendices.*

Comment 12: This comment identifies the general information requirements for completing the Waste Discharge Requirements (WDR) for the WRP facilities, including the reuse sites for recycled water.

Response: *The preliminary information required for the evaluation of the WRP facilities is provided in Subchapter 4.5 and the Volume 2, Hydrology Technical Appendices.*

Comment 13: This comment identifies the need to comply with general construction and industrial stormwater NPDES permits.

Response: *The evaluation of the requirements for both types of NPDES permits is provided in Subchapter 4.5 and the Volume 2, Hydrology Technical Appendices.*

Comment 14: This comment indicates that it is inappropriate to defer discussion of permitting issues until the permit applications and acquisition stage of review.

Response: *None of the permitting issues that are environmental in character are deferred and evaluation of these issues is provided in Subchapter 4.5 and the Volume 2, Hydrology Technical Appendices.*

- ***Response Letter #8 from Apple Valley Ranchos Water Company, July 13, 2010***

Comment 1: This comment recounts the Company's request for an extension for comments on the NOP.

Response: *Your comment is noted and is hereby incorporated into the administrative record that will be used by the project decision-makers when a decision is reached on this proposed project.*

Comment 2: This comment focuses on project objectives and the failure to identify specific end users other than percolation.

Response: *Some end users for recycled water are identified in Subchapter 4.5 and the Volume 2, Hydrology Technical Appendices. However, the VVWRA and the Town and City will not proceed with the two WRP projects until sufficient demand for the recycled water capacity is identified. The NOP and Initial Study clearly state that the percolation of recycled water is a backup, not the primary purpose of the two WRP plants.*

Comment 3: This comment focuses on general objective #3 as stated in the project Initial Study. It raises questions regarding adequacy of the existing treatment facilities and allowance of future growth.

Response: These concerns are evaluated in the Population and Housing/Land Use discussion in Subchapter 4.6 of the DEIR and in the discussion of existing treatment capacity and future treatment capacity demand contained in Subchapter 4.5 and the Volume 2, Hydrology, Technical Appendices of this DEIR.

Comment 4: This comment raises the issue of balancing recycled water discharges to meet Town and City requirements with the necessity to meet downstream obligations (make-up assessments). It asks that this issue be addressed in the EIR along with the change in the location of discharge relative to with the habitat supported downstream of the existing Westside WRP discharges.

Response: These issues are addressed in two sections of the DEIR. First, in the Biology Section, Subchapter 4.3, and then in the hydrology section, Subchapter 4.5.

Comment 5: This comment questions the merit of general objective #5. VVWRA has identified minimizing environmental and economic effects of implementing the proposed Subregionals as a general objective. This is a legitimate objective for a capital improvement project such as the proposed Subregionals, and a no project alternative can be compared by examining the environmental and economic effects of not implementing the proposed Subregionals. This comment further raises essentially the same issues regarding economic effects of the project raised in Comment #4.

Response: These economic issues are addressed in Subchapter 4.5 of the DEIR.

Comment 6: This comment suggests utilizing the CDPH draft regulations for recharge of groundwater with recycled municipal wastewater as the starting point for evaluation of the project's groundwater impacts.

Response: The CDPH draft regulations are utilized in the analysis presented in Subchapter 4.5 of the DEIR.

Comment 7: This comment requests that the DEIR include an evaluation of more difficult to treat trace constituents and suggests analysis of the Town's wastewater to determine if there are any constituents of concern.

Response: The trace constituent issue is addressed in Subchapter 4.5 of the DEIR.

Comment 8: This comment identifies prospective salt and nutrient management plans that may be prepared for the local basin and sub-basin. Salt and nutrient effects from percolation ponds should be addressed in the DEIR.

Response: The salt and nutrient issue is addressed in Subchapter 4.5 of the DEIR.

Comment 9: This comment identifies CECs as an issue of concern related to percolation of recycled municipal wastewater.

Response: The CEC issue is addressed in the analysis presented in Subchapter 4.5 of the DEIR.

Comment 10: This comment expresses concerns regarding specific wells operated by Apple Valley Ranchos (AVR) in the vicinity of the proposed percolation ponds. Two questions are raised; first, will there be negative effects on groundwater quality due to introduction of nitrogen from percolation; and second, why not immediately treat the recycled water to meet the 5 mg/L nitrogen limit?

Response: The nitrogen issue is addressed in Subchapter 4.5 of the DEIR.

Comment 11: This comment raises the issue of suitability of the sediments below the proposed percolation sites to accept the recycled municipal wastewater, including concerns regarding the extension of clay deposits below a depth of about 35 feet.

Response: The percolation capability of the underlying sediments is addressed in Subchapter 4.5 of the DEIR.

Comment 12: This comment requests modeling to determine the direction and time of detention between the percolation sites and nearby groundwater wells.

Response: The modeling of flow direction and time of detention issues are addressed in the analysis presented in Subchapter 4.5 of the DEIR.

Comment 13: This comment indicates that the PDR does not include a design for recharge, but primarily for irrigation. It also raises the issue of the volume of recycled water that should be evaluated as part of the EIR.

Response: This issue is addressed as part of the discussion regarding modeling of recharge of recycled water and potential irrigation users in Subchapter 4.5 of the DEIR.

Comment 14: This comment identifies the possible necessity for a storage reservoir to support the recycled water irrigation system.

Response: The storage reservoir issue is addressed in Subchapter 4.5 of the DEIR.

Comment 15: This comment raises two questions: first, what barriers would protect adjacent park and residential neighbors from a massive overflow for a plant failure; and will a proposed lift station and force main transfer the full volume of sewage to the existing Westside Plant.

Response: The plant failure issues are addressed in the analysis presented in Subchapter 4.5 of the DEIR.

Comment 16: This comment asks what agency will be the purveyor of the recycled water in AVR's service territory.

Response: VVWRA and the Town will oversee distribution of the recycled water within the Town/Authority service area.

Comment 17: This comment identifies existing reclaimed water lines within the service area and discusses potential customers that can use the recycled water for irrigation.

Response: These issues are addressed in Subchapter 4.5 of the DEIR.

Comment 18: This comment requests a complete discussion on how recycled water will be distributed and purveyed in the service area.

Response: These distribution and purveyance issues are addressed in Subchapter 4.5 of the DEIR.

2.2.2 List of Issue Areas Found to have No Impact, be Less Than Significant, or Less Than Significant with Mitigation Incorporated

The following issue areas were evaluated and found to have no impact, or be less than significant in the Initial Study:

- Aesthetics: For all issues except night lighting/glare, no significant adverse impacts were identified and with mitigation, light and glare issues can be controlled to a less than significant impact level.
- Agriculture: The Initial Study determined that no agricultural resources or values will be adversely affected by the proposed project.
- Geology/Soils: The Initial Study concluded that potentially significant geology/soil impacts might be caused by implementing the proposed project, but mitigation measures were identified that can control such impacts to a less than significant impact level.
- Hazards and Hazardous Materials: The Initial Study identified the use of hazardous materials in support of treatment operations, but existing management mechanisms are in place to ensure that no significant hazards will be created through project implementation.
- Land Use/Planning: The Initial Study concluded that the proposed project would not cause any significant land use impacts.
- Mineral Resources: The Initial Study determined that no mineral resources or values will be adversely affected by the proposed project.
- Public Services: The Initial Study determined that no public service systems will be adversely affected by the proposed project.
- Recreation: The Initial Study determined that no recreation facilities or demand for recreation will be adversely affected by the proposed project
- Transportation/Traffic: The Initial Study concluded that potentially significant transportation/traffic impacts might be caused by implementing the proposed project, but mitigation measures were identified that can control such impacts to a less than significant impact level.
- Utilities and Service Systems: Two utility/service system issues were carried forward to the EIR (wastewater treatment requirements and construction of new wastewater treatment facilities/expansion of existing facilities). The remaining utility issues, including stormwater drainage, water supply, and solid waste management were concluded in the Initial Study to experience less than significant adverse impacts.

These issue areas were analyzed in the Initial Study (Subchapter 9.1) and were found not to merit further consideration in the DEIR.

2.2.3 Issue Areas Remaining Significant

The following issue areas would remain significant areas of impact with implementation of the Proposed Project:

- Air Quality: All air quality issues will be evaluated as part of the EIR.
- Biological Resources: Direct and indirect biological resource issues will be evaluated as part of the EIR.
- Cultural Resources: Direct cultural resource issues will be evaluated as part of the EIR.
- Hydrology and Water Quality: Direct and indirect hydrology and water quality issues will be evaluated as part of the EIR.
- Noise: Direct and indirect noise issues will be evaluated as part of the EIR.
- Population and Housing: The potential growth inducement effects on population and housing resources of the VVWRA service area will be evaluated as part of the EIR.
- Utilities and Service Systems: Two utility/service system issues were carried forward to the EIR (wastewater treatment requirements and construction of new wastewater treatment facilities/expansion of existing facilities).

2.2.4 Areas of Any Controversy / Issues to be Resolved

Based on the comments received on the Notice of Preparation, the following issues have been identified as areas of controversy or issues to be resolved.

a. Diversion of wastewater discharges from the Westside WRP remains controversial because of potential habitat effects on downstream riparian resources and possible effects on delivery of water to downstream communities in accordance with the adjudication; and
b. Water quality effects on groundwater resources of the Alto Subbasin.

2.2.5 National Environmental Policy Act (NEPA) Compliance

VVWRA has consulted with the U. S. Bureau of Reclamation (BOR) and Mojave Water Agency (MWA) regarding potential funding for this proposed project that will facilitate recycled water use within the Victor Valley. After conferring with the BOR the regional environmental staff indicated that it would not be necessary to compile a separate environmental document to comply with NEPA. Thus, this DEIR has been prepared in the CEQA format. However, the various technical studies, such as air quality (federal conformity), biological resources (endangered species), cultural resources (documentation prepared for ultimate consultation with the State Historic Preservation Office, SHPO), and flood hazards (FEMA FIRM panels), have been prepared to meet NEPA environmental requirements. Further, several alternatives to the proposed project beside the standard No Project Alternative, have been given consideration in this DEIR. If federal funding is ultimately provided for the proposed project, the data and analysis presented in this DEIR, including analysis of other unique federal environmental issues (such as environmental justice), can be relied upon by the BOR to quickly compile a NEPA Environmental Assessment (EA) or Environmental Impact Statement (EIS).

2.4 SCOPE AND CONTENT OF THIS DEIR

In accordance with Sections 15063 and 15082 of the State CEQA Guidelines, the VVWRA prepared an Initial Study to identify the environmental resources and manmade systems that could experience significant environmental impact if the proposed project is implemented. After applying mitigation measures, VVWRA's Initial Study concluded that potential impacts associated with sections of nine (9) issue areas evaluated would be less than significant adverse impacts if the project is implemented as proposed (see analysis in Section 2.2.2).

The remaining six (6) issue areas were identified as having the potential to cause significant adverse environmental impacts. The specific environmental issues/topics analyzed in this DEIR are the potential impacts to air quality, biological resources, cultural resources, hydrology/water quality, noise, population/housing, and two utilities/service system issues (compliance with water quality requirements and wastewater treatment facilities.

Comments on the scope of the DEIR were considered by the VVWRA and after this consideration; the overall focus of the DEIR remains essentially the same. No additional topics have been added to the scope of the EIR as defined in the NOP.

In addition to evaluating the environmental issues listed above, this DEIR contains all of the sections mandated by the CEQA and State and County CEQA Guidelines. Table 2.3-1 provides a listing of the contents required in a DEIR along with a reference to the chapter and page number where these issues can be reviewed in the document. This DEIR is contained in two volumes. Volume 1 contains the CEQA mandated sections and Volume 2 contains the technical appendices.

Table 2.3-1
REQUIRED DEIR CONTENTS

Required Section (CEQA)	Section in DEIR	Page Number
Table of Contents (Section 15122)	Same	ii
Summary (Section 15123)	Chapter 1	1-1
Project Description (Section 15124)	Chapter 4	4-1
Significant Environmental Effects of proposed project (Section 15126a); Environmental Impacts	Chapter 4	4-1
Unavoidable Significant Environmental Effects (Section 15126b)	Chapter 4	4-1
Mitigation Measures (Section 15126c)	Chapter 4	4-1
Cumulative Impacts (Section 15130)	Chapter 4	4-1
Alternatives to the Proposed Action (Section 15126d)	Chapter 5	5-1
Growth-Inducing Impacts (Section 15126g)	Chapter 6	6-1
Irreversible Environmental Changes (Section 15126f)	Chapter 6	6-1
Effects Found Not to be Significant (Section 15128)	Chapters 2 and 4	2-1 and 4-1

Required Section (CEQA)	Section in DEIR	Page Number
Organizations and Persons Consulted (Section 15129)	Chapter 7	7-1
Appendices	Chapter 8	8-1

2.5 DEIR FORMAT AND ORGANIZATION

This DEIR contains eight chapters which, when considered as a whole, provide the reviewer with an evaluation of the potential significant adverse impacts from implementing the proposed project, the construction and operation of a Subregional WRP in the City of Hesperia and a Subregional WRP in the Town of Apple Valley. The following paragraphs provide a summary of the content of each chapter of this DEIR.

Chapter 1 contains the Executive Summary for the DEIR. This includes an overview of the Proposed Project and a tabular summary of the potential adverse impacts and mitigation measures.

Chapter 2 provides the reviewer with an Introduction to the document. This chapter of the document describes the background of the proposed project, its purpose, and its organization. The CEQA process to date is summarized and the scope of the DEIR is identified. Technical evaluations prepared for the DEIR are discussed and the format and availability of the DEIR are provided.

Chapter 3 contains the project description used to forecast environmental impacts. This chapter describes for the reviewer how the existing environment will be altered by the proposed project. This chapter sets the stage for conducting the environmental impact forecasts contained in the next several chapters.

Chapter 4 presents the environmental impact forecasts for the six issue areas considered in this DEIR. For each of the six environmental issues identified in Section 2.3, the following impact evaluation is provided for the reviewer: the project's existing environmental setting; the potential impacts forecast to occur if the project is implemented; proposed mitigation measures; unavoidable adverse impacts; and cumulative impacts.

Chapter 5 contains the evaluation of alternatives to the proposed project. Included in this section is an analysis of the no project alternative and other project alternatives.

Chapter 6 presents the topical issues that are required in a DEIR. These include: any significant irreversible environmental changes; and growth inducing effects of the project. As of January 1, 1995, the assessment of short-term benefits relative to long-term impacts is no longer required because it is considered redundant to other sections in a DEIR. This change was adopted as part of SB 749 (Thompson) which became law in January 1995.

Chapter 7 describes the resources used in preparing the DEIR. This includes persons and organizations contacted; list of preparers; and bibliography.

Chapter 8 contains those materials referenced as appendices to the DEIR, such as the Initial Study and Notice of Preparation. Appendix material is referenced at appropriate locations in the text of the DEIR.

2.6 AVAILABILITY OF THE TOWN OF APPLE VALLEY WASTEWATER RECLAMATION PLANT; CITY OF HESPERIA WASTEWATER RECLAMATION PLANT; AND RELATED FACILITIES DEIR

The DEIR for this project has been distributed directly to all public agencies and interested persons identified in the NOP mailing list (see Subchapter 9.1, Chapter 9) and as requested in the NOP comments, the State Clearinghouse, as well as any other requesting agencies or individuals. All reviewers will be provided 45 days to review the DEIR and submit comments to the VVWRA for consideration and response. The DEIR is also available for public review at the following location during the 45-day review period:

Apple Valley Newton T. Bass Branch Library
14901 Dale Evans Parkway
Apple Valley, CA 92307-3061

Hesperia Branch Library
9650 7th Avenue
Hesperia, CA 92345-3242

Published or electronic copies of the DEIR are available for purchase from VVWRA for a nominal fee upon request from interested parties.

2.7 VVWRA REVIEW PROCESS

After receiving comments on the DEIR, the VVWRA will prepare a Final EIR for certification by the VVWRA Board members (after review and recommendation by the VVWRA Staff) prior to making a decision on the project. Information concerning the DEIR public review schedule and VVWRA meetings for this project can be obtained by contacting:

Mr. Logan Olds, General Manager
Victor Valley Wastewater Reclamation Authority
15776 Main Street, Suite 3
Hesperia, CA 92345
(760) 948-8949

Other agency approvals (if required) for which this environmental document may be utilized include:

- California Department of Fish and Game
- U. S. Fish and Wildlife Service
- United States Army Corps of Engineers
- Lahontan Regional Water Quality Control Board
- Town of Apple Valley
- Mojave Desert Air Quality Management District
- City of Hesperia
- City of Victorville
- California Department of Transportation, District 8

- San Bernardino County
- Mojave Water Agency
- California Department of Public Health
- California Water Resources Control Board

CHAPTER 3 – PROJECT DESCRIPTION

All Chapter 3 figures are located at the end of this chapter, not immediately following their reference in text.

3.1 INTRODUCTION

This chapter of the Draft Environmental Impact Report (EIR) contains a detailed description of the proposed project with focus on those characteristics and activities that can cause physical changes in the environment. As discussed in Chapter 2, the project description focuses on the activities and facilities of the proposed Town of Apple Valley and City of Hesperia subregional wastewater reclamation plants that would be implemented if the proposed project is approved by the Victor Valley Wastewater Reclamation Authority for construction and operation.

The Victor Valley Wastewater Reclamation Authority ("Authority" or VVWRA) was formed in 1977 to help meet the requirements of the federal Clean Water Act and provide wastewater treatment for the Victor Valley, including the cities of Victorville and Hesperia (and Adelanto at that time), the Town of Apple Valley and the surrounding unincorporated areas. Figure 3-1 shows the location of the Authority within southern California and Figure 3-2 shows the Authority's service area boundary. The VVWRA is a joint powers authority and public agency of the State of California. Member Agencies include the Town of Apple Valley, including the Apple Valley Rancho Water District, the City of Hesperia, including the Hesperia Water District, the County of San Bernardino, and the City of Victorville.

The original wastewater treatment plant (now termed the Westside Water Reclamation Plant), with associated infrastructure, began operating in 1981, providing tertiary level treatment for up to 4.5 million gallons per day (MGD) average flow. VVWRA currently treats an average flow of approximately 12 MGD of wastewater generated by the communities of Hesperia, Victorville, Apple Valley, Oro Grande, and Spring Valley Lake. The Westside Water Reclamation Plant (WRP) treats a portion of the flow to a tertiary level and the remaining flow to a secondary level. A majority of the tertiary treated wastewater effluent is discharged to the Mojave River (adjacent to the Westside WRP) and a smaller amount is currently used as recycled water to irrigate landscaping at the treatment plant and the nearby Westwinds Golf Course.

The Authority in collaboration with its member agencies, the City of Hesperia and the Town of Apple Valley, developed a strategic goal of locating subregional Water Reclamation Plants (WRPs) to augment reclaimed water treatment and reuse capabilities of the Authority's overall wastewater management system. The proposed subregional facilities are proposed to be located in Hesperia and Apple Valley. The proposed project consists of installing and operating two WRPs (initially 1 MGD average flow expandable in the future to 4 MGD) and related infrastructure. Related infrastructure includes a gravity sewer, a lift station and force mains for the Hesperia WRP and modifications to an existing lift station and force mains to support the Apple Valley WRP. Recycled water lines connecting to direct recycled water users and to percolation ponds are also proposed as part of the overall project.

Grant funding is being sought from the U.S. Bureau of Reclamation (BOR) to partially fund the construction of the proposed facilities to meet this project's objective of providing reclaimed water within both communities to offset demand for potable water. The proposed WRPs would

be installed as Phase 1 and Phase 2 wastewater reclamation facilities designed for an initial 1.0 MGD of mechanical treatment capacity, with the ability to install additional mechanical elements to treat an additional 1.0 MGD without additional construction. Phase 2 would consist of subsequent expansion to 4.0 MGD treatment capacity at each WRP location. The WRPs would operate as scalping plants taking wastewater from the existing wastewater collection system located in the immediate vicinity of the two proposed WRPs and treating it to Title 22 standards for use as recycled water. The proposed project also includes recycled water lines to serve potential recycled water users and that can deliver excess recycled water to percolation basins for disposal and percolation into the Mojave River's Alto Groundwater Subbasin. These improvements are essential to protect and enhance water supply, water quality, and water reuse within the VVWRA's service area.

Relying on data contained in the Initial Study, the VVWRA determined that development and operation of the proposed facilities allowed by project approval could result in potential significant adverse impacts to the physical environment. Those issues with a potential to cause or experience significant impact are as follows: air quality, biological resources, cultural resources, hydrology/water quality, land use and planning, noise, population/growth inducement, and utilities and service systems. After review of all comment letters submitted in response to the Notice of Preparation, the scope of the Draft EIR remains unchanged. Thus, this EIR has been prepared to address the physical changes to the environment authorized by project approval relative to these eight environmental issues that the VVWRA would permit to occur, if the proposed project is approved. The VVWRA will serve as the Lead Agency for purposes of complying with the California Environmental Quality Act (CEQA) and the stakeholders of the proposed project, the Town of Apple Valley and City of Hesperia, and regulatory agencies that will function as CEQA Responsible Agencies will have the option of relying upon the certified Final EIR for any action they take in support of the proposed project.

3.2 PURPOSE AND NEED

The proposed project has five general objectives:

1. Construct wastewater reclamation plants at locations that facilitate an increase in the use of recycled water near end users.

2. Treat wastewater to produce effluent meeting the most stringent Title 22 Recycled Water criteria.

3. Provide the core infrastructure for expansion of the collection, treatment and disposal system as needed either to protect groundwater, or to accommodate growth in the Authority's service area.

4. Maximize the total water supply available to the community.

5. Minimize any adverse economic and environmental impacts to the community.

In addition to these general objectives, specific objectives for the proposed facilities are as follows:

a. Provide sufficient wastewater treatment capacity to ensure continuous compliance with anticipated regulatory requirements.

b. Provide additional treatment capacity in the upper reaches of the service area to alleviate flows in downstream interceptors

c. Provide for future expansion of services.

The installation of the proposed components of the WRP and associated system infrastructure is considered essential to the Authority in order to continue meeting the public health and safety requirements for wastewater treatment and water supply within its service area and to meet Lahontan Regional Water Quality Control Board (Regional Board or RWQCB) water quality objectives.

3.3 PROJECT LOCATION

The proposed project facilities are located within the Town of Apple Valley and City of Hesperia in the County of San Bernardino. Figure 3-1 shows the regional location of these cities and the project area.

3.3.1 Town of Apple Valley WRP, Percolation Ponds, and Pipeline Alignments

The proposed Town of Apple Valley WRP would be located on the north side of Otoe Road, just east of Quantico Road at the southwest corner of Brewster Park in the Town of Apple Valley at an elevation of approximately 2,909 feet above mean sea level. The WRP site is adjacent to the existing Otoe Road Lift Station, connecting to the existing sanitary sewer, which would be modified as part of the proposed project. There are two alternative locations for the percolation ponds that would receive residual recycled water for recharge to the regional groundwater aquifer. The percolation ponds in Alternative 1 would be located north of Waalew Road between Navajo Road (east of) and Carmel Lane. The Alternative 2 percolation pond location is proposed for a site north of Papago Road, east of Navajo Road, west of Temecula Road, centered just north of the intersection of Navajo Road and Carmel Road.

Figure 3-3 shows the site specific location of these three proposed Town WRP facilities on the USGS – Apple Valley North Quadrangle, 7.5 Minute Series topographic map. Figure 3-4 shows these locations on an aerial photo of the project area. The cadastral locations of these WRP facilities are: WRP, Section 4, SW 1/4, T5N, R3W, San Bernardino Base Meridian (SBBM); Alternative 1 Percolation Site, Section 34, SW 1/4, T6N, R3W, SBBM; and Alternative 2 Percolation Site, Section 34, NW 1/4, T6N, R3W, SBBM.

Two potential recycled water pipeline alignments from the WRP site to the two percolation pond sites are shown on Figure 3-3. One pipeline route extends from the WRP into Otoe Road, west to Dale Evans Parkway, north on Dale Evans to Waalew Road; east to Navajo and north, first to the intersection of Navajo Road to Taos Road (Alternative Site 1, Percolation Basins) and then north on Navajo to Papago Road, and then east on Papago to its intersection with Carmel Lane where it will enter Alternative Site 2, Percolation Basins. The second pipeline route extends from the WRP into Otoe Road, east to Navajo, north on Navajo to Waalew Road. North of Waalew Road the Alternative 2 Percolation Basins site access alignment remains the same as

described for the first pipeline alternative route. These two alternative routes are shown on Figures 3-3 and 3-4.

3.3.2 City of Hesperia WRP, Lift Station, Force Mains, and Percolation Ponds

The City of Hesperia has proposed two alternative locations for its WRP. Alternative A is located west of Interstate 15 (I-15). The specific proposed location of the WRP is located north of Main Street, south of Yucca Terrace Drive, and west of Catawba Road, along a westward extension of Acacia Road. The cadastral location of this Alternative A WRP site is in Section 15, SE 1/4, T4N, R5W SBBM, which can be located on the USGS – Baldy Mesa Quadrangle, 7.5 Minute Series topographic map. Figure 3-5 shows the Hesperia Alternative A location on a portion of the USGS – Baldy Mesa Quadrangle, 7.5 Minute Series topographic map and Figure 3-6 shows the WRP Alternative A location on an aerial photo of the area.

The lift station proposed to serve both WRP alternatives occupies the same location. The proposed location is shown on Figures 3-5, 3-6, and 3-7. A sewer main presently follows the alignment of Maple Avenue (see Figure 3-6). The proposed lift station site is located just west of Maple on the south side of Mojave Street, west of Tamarisk. The cadastral location of the proposed lift station is in Section 13, NW 1/4, T4N, R5W, SBBM. A short gravity flow sewer would connect the existing sewer main in Maple to the lift station site on Mojave, as shown on Figure 3-7.

The proposed project examined six alternative force main (pressure pipeline) alignments from the lift station to the Alternative A WRP location, which is approximately 3 miles southwest of the lift station. Refer to Figure 3-5. Of these six, the engineers recommended Alternative 1 (Carollo/HDR, Preliminary Design Report, City of Hesperia Lift Station and Force Main, page 6C-3) as the preferred alignment. This document examines the three highest ranked alternative force main alignments considered in the engineering study designed to connect to WRP A (FM Alternatives 1, 2 and 3) to the lift station. These pipeline alternatives range from a minimum of 15,300 feet in length to 18,200 feet in length. Table 3.3-1 summarizes these three alternative force main alignments that are proposed to connect to the WRP A location. These three alternative force main routes are located within Sections 13, 14 and 15, T4N, R5W, SBBM as shown on Figure 3-4.

Table 3.3-1
SUMMARY OF ALTERNATIVES HESPERIA LIFT STATION AND FORCE MAINS
DESIGN INFORMATION MEMORANDA VICTOR VALLEY WASTEWATER RECLAMATION AUTHORITY

Description of Characteristics	FM Alternative 1	FM Alternative 2	FM Alternative 3
Force Main Length	15,300	18,200	15,600
Casing Pipe Length			
I-15	350 feet	350 feet	350 feet
Aqueduct	500 feet	900 feet	500 feet
Trenchless Technology Method			
I-15	Jack & Bore	Jack & Bore	Jack & Bore
Aqueduct	Jack & Bore	Directional Drilling	Jack & Bore / Direction Drilling
Right-of-Way Acquisition Requirements	High	Low	High
Estimated Construction Cost	$3,800,000	$4,700,000	$4,100,000

The City of Hesperia WRP B site (preferred alternative reclamation plant site) is proposed to be located on the north side of Mojave Street, just west of Tamarisk Avenue approximately one half mile west of Maple Avenue in the City of Hesperia at an elevation of approximately 3,343 feet above mean sea level. Figure 3-7 shows the proposed WRP B site on an aerial photograph and Figure 3-8 shows the location on a portion of the USGS – Hesperia Quadrangle, 7.5 Minute Series topographic map. The cadastral location of the WRP B site is Section 12, SE 1/4, T4N, R5W, SBBM.

As noted above, a gravity sewer will connect the existing sewer main in Maple Avenue, at the intersection of Maple and Mojave, to the lift station. In order to connect the lift station to the proposed WRP B Alternative site a short segment of force main will be installed in Mojave Street over a distance of about 1,500 feet. The gravity sewer alignment, lift station, wastewater force main and the WRP B site are all shown on Figure 3-7. In addition, the project would include a force main between the WRP and a manhole located at the intersection of Maple Avenue and Mauna Loa Street to return to the collection system the waste activated sludge generated by the treatment process.

The final component of the Hesperia WRP facilities is a recycled water force main that would deliver recycled water from the WRP alternative sites to the percolation basin. Figure 3-9 shows the location of this proposed recycled water force main alignment. The force main would extend as follows: from the WRP east along Mojave Street to Tamarisk Avenue; south along Tamarisk to Willow Street; east along Willow to 3rd Avenue; east along Mesa Street to Santa Fe Avenue; and finally, northeast along Santa Fe Avenue to the proposed percolation basin site which is located at the northwest corner of the intersection of Manzanita Street and I Avenue and Manzanita Street and Osbrink Drive. This alignment is shown on Figure 3-9. To connect to the WRP-A the force main would extend west from the intersection of Tamarisk and Willow along the Live Oak Street alignment to Amargosa Road; then west along Amargosa to Cataba Road; and finally, north along Cataba to Acacia where the force main will turn west into the WRP A site. It is possible that onsite percolation basins may be installed at the WRP A site. No layout of basins has been identified for this site, but the site specific investigations evaluated an area sufficient to include such basins.

3.3.3 Eastside WRP Site

In addition to the Town of Apple Valley and City of Hesperia wastewater reclamation plants, VVWRA is interested in examining the environmental constraints at a third WRP site designated as the Eastside Regional WRP site. No specific facilities are proposed for this WRP site at this time, but it is considered by VVWRA to be an ideal location for a future WRP that would utilize wastewater flows from the interceptor sewer that presently serves the area along I-15 from the I-15/Stoddard Wells Road interchange to Dale Evans Parkway. Figure 3-10 is an aerial photograph of the Eastside WRP site (identified as the Eastside Regional WWTP Potential Site Area) and surrounding vicinity. The Eastside WRP site encompasses an area located between the Mojave River on the west, I-15 on the south, Stoddard Wells Road on the east and north, Dante Street on the north and the Mojave Northern Railroad track alignment on the northwest. Figure 3-11 encompasses a portion of the USGS – Victorville and Apple Valley Quadrangles, 7.5 Minute Series topographic maps. The cadastral location of the proposed Eastside WRP site area consists portions of Sections 3 and 4, T5N, R4W, SBBM and Sections 33 and 34, T6N, R4W, SBBM, as shown on Figure 3-11.

3.4 PROJECT CHARACTERISTICS

VVWRA envisions the facilities described in this Section as part of a recycled water program. This program is anticipated to be implemented over an extended period of up to 10 years. As funding becomes available during this period the Town of Apple Valley and the City of Hesperia WRPs will be installed and begin operation with 1.0 MGD average flow of tertiary treatment capability. The recycled water will be utilized for landscape irrigation and industrial applications, and excess recycled water would be delivered to percolation ponds for recharge (percolation and possible future aquifer storage and recovery (ASR) wells) to the regional groundwater aquifer. As part of this overall recycled water program, a future WRP is also envisioned at the Eastside WRP site with the same initial capacity. As additional wastewater is generated and additional recycled water users are identified in the future, these WRPs may have their treatment capacity expanded in phases up to a maximum of 4.0 MGD average flow as currently envisioned. Expansion beyond this capacity is not anticipated or evaluated in this document. At this time no specific evaluation of a WRP is proposed at the Eastside WRP site, only an environmental constraints analysis.

This environmental document evaluates a mix of an overall recycled water program, particularly cumulative impacts, and site specific facilities based on facility designs prepared by the two consulting engineering firms that collaborated on the design for the Apple Valley and Hesperia WRPs. These two firms are Carollo Engineers and HDR Engineering, Inc. The engineers have compiled the following Preliminary Design Reports “Town of Apple Valley WRP” (December 2009); “City of Hesperia WRP” (December 2009); and “City of Hesperia Lift Station and Force Main” (December 2009). The information regarding site specific facilities is abstracted and summarized from these three documents. For reviewers interested in more engineering design detail, the reviewer is referred to the Technical Appendices where these three Preliminary Design Reports (PDRs) are presented in full as Appendices 1, 2 and 3.

In summary, the following specific facilities will be evaluated in this document.

1. <u>Town of Apple Valley</u>
   a. Waste Reclamation Plant (WRP).
   b. A pipeline connection between the proposed WRP and the existing Otoe Road Lift Station (source of wastewater to be treated).
   c. A recycled water pipeline to deliver recycled water to one of two percolation basin sites where recycled water can be recharged to the regional groundwater aquifer.
   d. Two alternative percolation pond sites, where excess recycled water can be disposed when recycled water production exceeds recycled water demand, should this occur.
   e. Use of between 1.0 and 4.0 MGD of recycled water within the Town of Apple Valley over the life of the proposed program.

2. <u>City of Hesperia</u>
   a. Waster Reclamation Plant (WRP, two possible locations) and Lift Station.
   b. A gravity pipeline connection between the lift station and the existing sewer main (source of wastewater to be treated).
   c. A force main from the lift station to the WRP.

d. A recycled water pipeline (force main) to deliver recycled water to recycled water users and a percolation basin site where excess recycled water can be recharged to the regional groundwater aquifer.
e. One percolation pond site, where excess recycled water can be disposed when recycled water production exceeds recycled water demand, should this occur.
f. Use of between 1.0 and 4.0 MGD of recycled water within the City of Hesperia over the life of the proposed program.

3. Eastside WRP
   a. Environmental constraints analysis for the Eastside WRP Potential Site Area, no proposed facilities at this time.

The following text provides a summary discussion of each of the above facilities. As noted above, the detailed engineering assumptions and facility design requirements are provided in the Technical Appendices, Appendix 1, 2 and 3.

3.4.1 Town of Apple Valley Proposed Water Reclamation Facilities

The WRPs proposed are "scalping plants" in that they will take wastewater from the regional wastewater collection system at a constant daily rate (design capacity) and treat and reuse the recycled water locally for non-potable uses, or for discharge of the excess recycled water into local area percolation basins for recharge to the regional groundwater aquifer. The ultimate objective of both direct and indirect use of the recycled water generated from the proposed Apple Valley WRP is to offset demand for groundwater resources extracted from the regional aquifer. The wastewater remaining in the regional collection system will continue to flow to the VVWRA Westside WRP located in the northern portion of Victorville, east of the Southern California Logistics Airport (SCLA). The solids removed by the WRPs will also removed from the wastewater and returned to the regional sewer collection system for delivery to the Westside WRP for processing. For example, if flow in the sewage collection system (sewer main) near one of the proposed WRPs is 3.0 MGD average flow, in Phase 1 of the program the proposed WRP will take 1.0 MGD out of the system to treat and reuse and the remaining 2.0 MGD (plus solids from the WRP) would remain in the collection system and continue to flow to the regional treatment plant for treatment and reuse/discharge. The proposal adds capacity to the regional system as a whole, but also ensures a constant, known, supply of recycled water is available from the proposed WRP within the local area. As noted above, waste activated sludge resulting from the treatment process will be returned to the regional sewage collection system for delivery to and treatment at the regional Westside WRP.

Town of Apple Valley Water Reclamation Plant (WRP)
The WRP proposed for the Town of Apple Valley would have an initial treatment capacity of 1.0 MGD average flow and for the purposes of this evaluation, a build-out treatment capacity of 4.0 MGD. Additional capacity may be considered in the future, but will not be given further consideration in this document. Phased development of the WRP envisions the initial facility size as capable of processing 1.0 MGD of wastewater; a second phase, Phase 2, would expand the WRP to 2.0 MGD and a third phase of up to 4.0 MGD average flow. Implementation of the second and third phases would be dependent upon actual future growth in recycled water demand and regulatory considerations.

Site

As described under the project location discussion above, the Apple Valley WRP is proposed to be located at Brewster Park, along the southern boundary adjacent to Otoe Road. Figure 3-4 shows the site location and Figure 3-12 shows the proposed site layout for the WRP. The site is approximately 240' x 420' or about 100,800 square feet or about 2.3 acres in size.

Apple Valley Water Reclamation Plant Design Requirements

The PDR evaluated the design performance requirements for the proposed Apple Valley WRP and identified the preferred alternative design for the WRP and associated facilities. A copy of this document is provided as Appendix 1 of the Technical Appendices to this document. The following is a summary of the PDR findings and recommendations, drawing heavily on the text in the PDR.

Influent Loading Assumptions: As previously noted, the hydraulic capacity of the initial treatment plant will be 1.0 MGD average flow. However, the "waste load" of the plant is equally or more important to plant design, and waste load can be characterized by the pounds of Biochemical Oxygen Demand (BOD) in the influent flow, Total Suspended Solids (TSS) and Total Kjeldahl Nitrogen (TKN) in the influent flow. The pounds of waste loads or mass loading rates depend on two factors: the hydraulic flow rate, which is defined initially as 1.0 MGD; and the waste concentrations of the flow. The design influent wastewater characteristics presented in the PDR are based on historical wastewater quality at the Apple Valley Metering Station, located at the point of discharge to the VVWRA interceptor going to the Westside WRP. Table 3.4-1 shows the influent water quality assumptions used in the PDR.

Table 3.4-1
APPLE VALLEY WRP DESIGN INFLUENT WASTEWATER QUALITY CHARACTERISTICS

Constituent	Unit	Annual Average[1]	Maximum Month[2]
Total BOD (Biological Oxygen Demand)	mg/L	276	414
Soluble BOD	mg/L	119	178
TSS (Total Suspended Solids)	mg/L	274	410
NH_4-N (Ammonia Nitrogen)	mg/L	29.1	37.9
TKN (Total Kjeldahl Nitrogen)	mg/L	43	55.9
Alkalinity[3]	mg/L	200	200
Temperature, Degree[3]	C	17	17
pH[3]	log [H+]	7.0	7.0

Notes:
1 Total BOD, TSS, and Ammonia Nitrogen values based on 2005-2009 historical data at the Apple Valley Metering Station. Ammonia to TKN ratio and soluble BOD fraction of total BOD are based on 2007 influent data at the VVWRA Westside WRP (Westside Water Reclamation Plant Phase III Design Summary, HDR, March 1998).
2 Maximum month peaking factors of 1.5 (BOD and TSS) (and 1.3 (TKN and NH4-N) based on 2007 influent data at the VVWRA Westside WRP.
3 Based on 2007 influent data at the VVWRA WRP, Westside Water Reclamation Plant Phase III Design Summary (HDR, March 1998).

Influent Peak Flows: The Apple Valley WRP has been designed as a scalping plant with a constant treatment flow. Therefore, hydraulic peaking factors have not been considered in the design of the WRP.

Influent Peak Mass Loadings: Like hydraulic peaking factors, influent mass loadings vary temporally (daily, weekly or monthly). The maximum anticipated constituent concentrations and peak loading factors used in the PDR are based on maximum month constituent concentrations shown in Table 3.4-1 and are 414 mg/L for BOD, 410 mg/L for TSS and 55.9 mg/L for TKN.

Assumed Treated Effluent Limitation: The treatment requirements, effluent limitations, will be established by the Regional Board through issuance of a Waste Discharge Requirements (WDR) permit. The WRP must be designed to meet these requirements, which are assumed to be established to minimize degradation of existing groundwater and surface water quality. Assumed and estimated treated effluent limits for the WRP design are shown on Table 3.4-2.

Table 3.4-2
ANTICIPATED EFFLUENT DISCHARGE LIMITATIONS AND RECOMMENDED EFFLUENT DESIGN CRITERIA FOR THE TOWN OF APPLE VALLEY WRP

Parameter	VVWRA RFP Attachment A Effluent Limit	Title 22 Water Recycling Criteria	Draft Regulation for Groundwater Recharge Reuse	Recommended Effluent Design Criteria
pH	6.5-8.5	--	--	6.5-8.5
BOD_5 (mg/L) Avg. Monthly Avg. Weekly Max Daily	 10 15 30	--	--	 10 15 30
TSS (mg/L) Avg. Monthly Avg. Weekly Max Daily	 10 15 30	--	--	 10 15 30
Total Nitrogen (mg/L)	--	--	5	8/4[1]
Turbidity (NTU) 24hr - 5% of time sample max. Any time max.	--	 0.2 0.5	--	 0.2 0.5
Total Coliform (CFU/100 ml) 7-day median 30-day one sample max. Single sample maximum	--	 2.2 23 240	--	 2.2 23 240

Note:
1 Biological process will be designed to treat to a goal of 8 mg/L, with the flexibility to meet future anticipated goal of 4 mg/L (80 percent of maximum limits of 10 and 5 mg/L, respectively).

These treated effluent values are assumed to minimize degradation of existing groundwater quality and optimize reuse potential.

Solids Handling and Disposal: The WRP will generate waste activated sludge (WAS) that will require disposal or reuse in accordance with existing state and federal regulations. The proposed scalping plant would not treat the WAS further. Instead, the WAS will be put back into the regional sewage collection system and treated at the regional Westside WRP.

WRP Onsite Facilities: The overall treatment process selected for the Apple Valley WRP is a Membrane Bioreactor approach to treating wastewater. The Apple Valley WRP will be comprised of the following:

- Influent lift station (minor modifications to existing Otoe Lift Station force main.
- Screening - 2 mm rotary drum screens
- Activated sludge process - biological process to meet a total nitrogen limit of 8 mg/L with flexibility to meet future nitrogen regulation limit of 5 mg/L, with a goal of 4 mg/L or less
- Membrane filtration - submerged hollow fiber membrane filtration system
- Ultraviolet disinfection - using low pressure high output closed vessel technology to reduce overall energy consumption
- Reclaimed water pump station -deliver water for off-site and on-site uses
- Waste activated sludge - Pumped to downstream section of adjacent collection system
- Headworks odor control - In ground non-proprietary biofilter for treatment of foul air from the screening area

Figure 3-13 provides a schematic representation, Process Flow Diagram, for the above treatment process and Figure 3-12 shows a typical layout. The following text describes some of these essential facilities.

Primary Treatment

Headworks and Grit Chamber: The headworks removes large and stringy objects from the wastewater and removes heavy and abrasive particles (grit) for disposal into a dumpster and then the local landfill. The PDR recommends an internally fed rotating drum screen for the influent. The location of the headworks is shown on Figure 3-12. It encompasses an area of about 40 feet by 40 feet. Screenings from the rotary drum screens are discharged to a washer and compactor. The washer assists in control of odors from the screened materials, while the compactor decreases the volume of screenings for disposal. Screenings are transferred to a dumpster for transport to a disposal site.

Two 2-mm rotary drum screens (one on stand-by) are proposed with a capacity of 2 MGD per screen. Influent flows on the downstream side of the headworks will be discharged to one pipe. Pumps and piping, as required, will be used to internally move material at the headworks.

Coarse screening and grit removal are provided for as future expansion features if needed to supplement the fine screens.

Secondary and Tertiary Treatment

Secondary/Tertiary treatment at the WRP will consist of an activated sludge process for reduction of BOD and nutrient removal, coupled with a membrane bioreactor technology (MBR) for solids-liquids separation. Initially a four-stage Bardenpho process will be used for reduction of BOD and nutrient removal to meet a TN limit of 10 mg/L and a goal of 8 mg/L. The biological treatment basins can then be modified to accommodate a four-stage Bardenpho configuration to comply with a potential nutrient limit of 4 mg/L N in the future if necessary.

The MBR process combines biological treatment with filtration to achieve secondary treatment plus advanced filtration. The MBR process replaces the function of secondary clarifiers and granular media (usually sand filters) or cloth disk filtration in the conventional wastewater treatment process.

Biological Treatment: The biological treatment process proposed provides, activated sludge treatment of physically screened raw wastewater. The two proposed biological treatment basins provide anoxic zones, aerobic zones (aerated), and swing zones (capability for both anoxic and aerobic treatment) for maximum removal of nutrients by microorganisms in various metabolic processes. Initial design will be for a 1.0 MGD flow with the ability to reduce Total Nitrogen to below 10 mg/L, with a goal of 8 mg/L or less, the system designed for modification to a system in the future that would remove more nutrients if needed.

The biological treatment basins are configured as single-pass basins with internal baffles to separate the different zones and facilitate serpentine flow and minimize potential for back-mixing between adjacent zones.

Screened wastewater and returned activated sludge (from the MBR process) will be combined and equally distributed between the biological treatment basins. This mixed liquor will flow through a first anoxic zone, a swing zone, two aerobic zones, and a second swing zone. The swing zones can be operated as either an aerobic or anoxic zone depending on what is needed to remove nutrients in the wastewater. (There will also be a future pump and piping from the second aeration zone back to the anoxic zone if needed in order to achieve additional denitrification to remove more nutrients prior to filtration).

At the end of the swing zone, the mixed liquor will then flow into a wet well. Pumps will transfer the mixed liquor to the MBR basins. The return activated sludge from the MBR process will be overflow by gravity to the beginning of the biological treatment process.

The dimensions of the biological treatment process area are approximately 200 feet by 60 feet.

MBR: The purpose of the MBR process is to remove suspended solids in the mixed liquor from the biological treatment process and provide a high-quality filtrate that can be effectively disinfected with UV disinfection methods. Membranes are immersed in open tanks of aerated mixed liquor. The membranes are hollow fibers with fixed pore size to prevent suspended solids from passing through. (The suspended solids resulting from the MBR system are the return activated sludge). Permeate pumps create a partial vacuum in the membrane fibers driving flow from the biological treatment process to the inside of the membrane fibers, filtering the flow. Each bundle of fibers consists of 370 sq. ft. of membrane area. These bundles are

grouped together and the number of total bundles needed is determined by plant flow requirements. Two MBR units are recommended for Phase 1 with the equivalent of one more train being needed for the second phase.

Scum and Waste Activated Sludge: The waste activated sludge and scum are removed on a regular basis at the end of the biological treatment process and just prior to the MBR system. They are discharged into the regional sewer collection system via the WAS pump station.

UV Disinfection: The UV Disinfection facility ensures an adequate dose of UV radiation to disinfect the treated effluent. It uses UV lamps to disinfect water. The process inactivates pathogens and other microorganisms, but does not leave a residual disinfecting effect in the recycled water, as chlorine does. Therefore, after primary disinfection with UV light, bulk sodium hypochlorite will be used to provide chlorine residual in the recycled water distribution system at the reclaimed water pump station. The performance standard for primary disinfection is a total coliform concentration of 2.2 MPN/100 ml maximum for the 7-day median; one instance per month of treated effluent exceeding 23 MPN/100 ml; and a single sample with a concentration of 240 MPN/100 ml.

The typical UV Disinfection system is an open channel, low pressure, high output system, with an automatic cleaning system for the UV lamps. However, the PDR recommends a close-channel UV system. The overall system consists of the inlet pipe from the MBR process, three UV treatment systems (with room for an additional system) and a pipe to the reclaimed water pump system. The UV treatment area is approximately 43 feet by 30 feet.

Reclaimed Water Pump Station: A reclaimed water pump station will be provided to convey the treated water for off-site and on-site recycled water uses. It will consist of a concrete clear well with vertical turbine pumps, a hydropneumatic tank to maintain plant water system pressure, a back pulse tank to store reclaimed water for membrane back pulsing, and a chlorine-feed to the clear well to provide residual chlorination of the reclaimed water.

Odor Control: An In-ground biofilter will be installed for treating foul air in the screening room of the headworks.

Operations Building: An administrative, small process laboratory and bathroom facilities will be located within the WRP.

Backup Generator: An emergency backup diesel generator (approximately 350 kW) will be maintained on the property to ensure the facility can continue to operate in the event of a electrical power outage. This generator will be located on a concrete pad adjacent to the WRP structure and an 8-hour capacity above ground diesel fuel storage tank, with a leak collection containment system, will be installed adjacent to the generator.

WAS Return: WAS will be pumped from the proposed Apple Valley WRP into the existing Otoe Road Lift Station force main to allow conveyance to the downstream portion of the collection and ultimate treatment at the Westside WRP. A wet well will be installed to facilitate transfer of the WAS to the Otoe Road Lift Station.

Electrical Requirements and Control System: Estimated power supply requirements for the Apple Valley WRP are estimated to be 700 kW per day. The WRP will be constructed to receive power from the local utility (SCE) and distribute it through the plant. A 480 VAC line will connect underground to adjacent electricity distribution lines owned by Southern California Edison (SCE). As described above, there will be a back-up generator incorporated in the WRP to ensure the plant can operate in the event electricity is temporarily unavailable from SCE.

The instrumentation and control system will be designed to monitor and control the WRP. Allen Bradley Programmable Logic Controllers (PLCs) will be used for this function at the proposed WRP. The PLCs would communicate using Ethernet over a fiber optic backbone. Within a control room, the operators will interface with the system using the Wonderware Human Machine Interface (HMI). At key locations in the plant, an Industrial Personal Computer will be loaded with Wonderware screens, and would also serve as remote HMIs.

Recycled Water Lift Station: The WRP would include a recycled water lift station that will pump the recycled water to the proposed percolation basins. This facility will consist of a concrete clear well pump station, vertical turbine pumps, a hydropneumatic tank to maintain plant water system pressure, a back pulse tank to store reclaimed water for membrane back pulsing, and a chlorine feed system to provide the residual chlorination of the reclaimed water. Refer to Figure 3-12 for this facility's location.

WRP Offsite Facilities

There are two types of offsite facilities.

Recycled Water Pipeline Two alternative alignments have been identified to transport the recycled water to one of two alternative percolation basin locations. This force main will be up to 10" in diameter and it is assumed that it will be installed at a rate of 200 lineal feet of pipeline per day. The Alternative 1 recycled water force main pipeline distance to the Alternative 1 percolation basins is about 12,500 feet; and to the Alternative 2 percolation basins is about 16,500 feet. The Alternative 2 recycled water force main pipeline distance to the Alternative 1 percolation basins is about 11,000 feet; and to the Alternative 2 percolation basins is about 15,000 feet. Refer to Figures 3-3 and 3-4, which show the location of the two alternative pipeline alignments

Percolation Ponds: Percolation ponds of approximately 16 acres in area would be built on an approximately 20 acre site where percolation would occur. There are two potential sites where percolation ponds could be constructed. No preferred alternative site has been determined at this time. The ponds would be constructed by grading the basins, including use of as much excavated material as possible to form the basin berms. Any excess excavated material would be made available to local contractors to be used as fill material.

Site Design Concepts: The facility design envisions placement of the facilities within two major structures on the property. Figure 3-14 shows a conceptual design for the Apple Valley WRP. It includes a non-metallic roof; CMU split face facade; site security fencing; and screening through use of berms and landscaping. Structure colors would be consistent with City design requirements, such as desert tones with split face blocks, etc. Exterior lighting will be minimal for safety purposes and will be directed onto the WRP site. Sound attenuation for noise facility

components will be provided, either directly on the equipment or through structural controls. The nearest residence is about 700 feet and park recreation activities will occur at a comparable distance from the facility. Noise attenuation at the WRP will conform with City noise requirements.

3.4.2 City of Hesperia Proposed Water Reclamation Facilities

The WRP proposed for the City of Hesperia would have an initial treatment capacity of 1.0 MGD average flow and a Phase 2 capacity of 4 MGD, which the potential build-out treatment capacity envisioned at this time. If approved, the 1.0 MGD capacity WRP would be installed in the near future. Implementation of the second and third phases would be dependent upon future growth in wastewater flows, recycled water demand and regulatory considerations. There are two proposed locations for the Hesperia WRP. Alternative A is located west of Interstate 15, as shown on Figures 3-5 and 3-6. The proposed Alternative B Hesperia WRP site is located east of Interstate 15 as shown on Figures 3-6 through 3-9. The proposal adds capacity to the regional system as a whole, but also ensures a constant, known, supply of recycled water is available from the proposed WRP within the local area. Waste activated sludge resulting from the treatment process will be returned to the regional sewage collection system for delivery to and treatment at the regional Westside WRP. The following analysis of WRP onsite facilities applies to both Alternative A and Alternative B.

Site

As described under the project location discussion above, two alternative locations are being considered for the Hesperia WRP. Alternative A is located in the vicinity of the intersection of Cataba Road and Acacia Road. Figure 3-5 and 3-6 show the site location and Figure 3-15 shows a typical WRP layout that would be installed at both locations. The site is approximately 240' x 420' or about 100,800 square feet or about 2.3 acres in size. Both the Alternative A site and Alternative B site contain more than five acres and the maximum area of disturbance on each site will about three acres.

Hesperia Water Reclamation Plant Design Requirements

The PDR evaluated the design performance requirements for the proposed Hesperia WRP and identified the preferred alternative design for the WRP and associated facilities. A copy of the two PDR documents for Hesperia is provided as Appendix 2 and Appendix 3 of the Technical Appendices to this document. The following is a summary of the PDR findings and recommendations, drawing heavily on the text in the PDR. Refer to the Technical Appendices if more detail is desired.

Influent Loading Assumptions: As previously noted, the hydraulic capacity of the initial treatment plant will be 1.0 MGD average flow. However, the “waste load” of the plant is equally or more important to plant design, and waste load can be characterized by the pounds of biochemical oxygen demand (BOD) in the influent flow. The pounds of waste load, or mass loading rate depends on two factors: the hydraulic flow rate, which is defined initially as 2.0 MGD; and the waste concentration of the flow. The PDR assumes the influent wastewater quality will be similar to the quality of influent entering the Regional Westside WRP. Table 3.4-3 shows the influent water quality assumptions used in the PDR.

City of Hesperia Water Reclamation Plant Design Requirements

The proposed design of the City of Hesperia Water Reclamation Plant (WRP) and related facilities was developed by the engineering consulting firm of Carollo Engineers in association with HDR through the preparation of a Preliminary Design Report for the City of Hesperia WRP published in July 2009. This document, termed a "PDR" evaluated the design performance requirements for the proposed WRP and identified the preferred alternative design for the WRP and associated facilities. A copy of this document is provided as Appendix 2 to this document. The following is a summary of the PDR findings and recommendations, drawing heavily on the text in the PDR.

Influent Loading Assumptions: As previously noted, the hydraulic capacity of the initial treatment plant will be 1.0 MGD average flow. However, the "waste load" of the plant is equally or more important to plant design, and waste load can be characterized by the pounds of BOD, TSS and TKN in the influent flow. The pounds of waste loads or mass loading rates depend on two factors: the hydraulic flow rate, which is defined initially as 1.0 MGD; and the waste concentrations of the flow. The design influent wastewater characteristics presented in the PDR are based on historical wastewater quality at the Hesperia Metering Station, located at the point of discharge to the VVWRA interceptor going to the Westside WRP.

Table 3.4-3 shows the influent water quality assumptions used in the PDR:

Table 3.4-3
DESIGN INFLUENT WASTEWATER QUALITY CHARACTERISTICS

Constituent	Unit	Annual Average[1]	Maximum Month[2]
Total BOD (Biological Oxygen Demand)	Mg/L	461	691
Soluble BOD	Mg/L	198	297
TSS (Total Suspended Solids)	Mg/L	439	659
NH_4-N (Ammonia Nitrogen)	Mg/L	29.3	38.1
TKN (Total Kjeldahl Nitrogen)	Mg/L	43.3	56.3
Alkalinity[3]	Mg/L	200	200
Temperature, Degrees[3]	C	17	17
pH[3]	log [H+]	7	7

Notes:
1 Total BOD, TSS, and Ammonia Nitrogen values based on 2005-2009 historical data at the Apple Valley Metering Station. Ammonia to TKN ratio and soluble BOD fraction of total BOD are based on 2007 influent data at the VVWRA Westside WRP (Westside Water Reclamation Plant Phase III Design Summary, HDR, March 1998).
2 Maximum month peaking factors of 1.5 (BOD and TSS) (and 1.3 (TKN and NH4-N) based on 2007 influent data at the VVWRA Westside WRP.
3 Based on 2007 influent data at the VVWRA WRP, Westside Water Reclamation Plant Phase III Design Summary (HDR, March 1998).

Influent Peak Flows: The City of Hesperia WRP has been designed as a scalping plant with a constant treatment flow. Therefore, hydraulic peaking factors have not been considered in the design of the WRP.

Influent Peak Mass Loadings: Like hydraulic peaking factors, influent mass loadings vary temporally (daily, weekly or monthly). The maximum anticipated constituent concentrations and peak loading factors used in the PDR are based on maximum month constituent concentrations shown in Table 3.4-3 and are 691 mg/L for BOD, 659 mg/L for TSS and 56.3 mg/L for TKN.

Assumed Treated Effluent Limitation: The treatment requirements, effluent limitations, will be established by the Regional Board through issuance of a Waste Discharge Requirements (WDR) permit. The WRP must be designed to meet these requirements, which are assumed to be established to minimize degradation of existing groundwater and surface water quality. Assumed/estimated treated effluent limits for the WRP design are shown on Table 3.4-4 (Table 1A.2 of the PDR).

Table 3.4-4
ANTICIPATED EFFLUENT DISCHARGE LIMITATIONS AND RECOMMENDED EFFLUENT DESIGN CRITERIA FOR THE CITY OF HESPERIA WRP

Parameter	VVWRA RFP Attachment A Effluent Limit	Title 22 Water Recycling Criteria	Draft Regulation for Groundwater Recharge Reuse	Recommended Effluent Design Criteria
pH	6.5-8.5	-	-	6.5-8.5
BOD_5 (mg/L) Avg. Monthly Avg. Weekly Max Daily	 10 15 30	-	-	 10 15 30
TSS (mg/L) Avg. Monthly Avg. Weekly Max Daily	 10 15 30	-	-	 10 15 30
Total Nitrogen (mg/L)	-	-	5	8/4[1]
Turbidity (NTU) 24hr - 5% of time sample max. Any time max.	-	 0.2 0.5	-	 0.2 0.5
Total Coliform (CFU/100 ml) 7-day median 30-day one sample max. Single sample maximum	-	 2.2 23 240	-	 2.2 23 24

Note:
1 Biological process will be designed to treat to a goal of 8 mg/L, with the flexibility to meet future anticipated goal of 4 mg/L (80 percent of maximum limits of 10 and 5 mg/L, respectively).

These treated effluent values are assumed to minimize degradation of existing groundwater quality and optimize reuse potential.

Solids Handling and Disposal: The WRP will generate waste activated sludge (WAS) that will require disposal or reuse in accordance with existing state and federal regulations. The proposed scalping plant would not treat the WAS further. Instead, the WAS will be put back into the regional sewage collection system and treated at the regional Westside WRP.

WRP Onsite Facilities: The overall treatment process selected for the Hesperia WRP is a Membrane Bioreactor approach to treating wastewater. The Hesperia WRP will be comprised of the following:

- Influent lift station (a separate lift station is proposed and discussed below)
- Screening - 2 mm rotary drum screens
- Activated sludge process - biological process to meet a total nitrogen limit of 10 mg/L, with flexibility to meet future nitrogen regulations of less than 5 mg/L
- Membrane filtration - submerged hollow fiber membrane filtration system
- Ultraviolet disinfection - using low pressure high output closed vessel technology to reduce overall energy consumption
- Reclaimed water pump station -deliver water for off-site and on-site uses
- Waste activated sludge - Pumped to downstream section of adjacent collection system
- Headworks odor control - In ground non-proprietary biofilter for treatment of foul air from the screening area.

Figure 3-16 provides a schematic representation, Process Flow Diagram, for the above treatment process and Figure 3-15 shows a typical layout. The following text describes some of these essential facilities.

Primary Treatment

Headworks and Grit Chamber: The headworks remove large and stringy objects from the wastewater and removes heavy and abrasive particles (grit) for disposal into a dumpster and then the local landfill. The PDR recommends an internally fed rotating drum screen for the influent. The location of the headworks is shown on Figure 3-15. It encompasses an area of about 40 feet by 40 feet. Screenings from the rotary drum screens are discharged to a washer and compactor. The washer assists in control of odors from the screened materials, while the compactor decreases the volume of screenings for disposal. Screenings are transferred to a dumpster for transport to a disposal site.

Two 2-mm rotary drum screens (one on stand-by) are proposed with a capacity of 2 MGD per screen. Influent flows on the downstream side of the headworks will be discharged to one pipe. Pumps and piping, as required, will be used to internally move material at the headworks.

Coarse screening and grit removal are provided for as future expansion features if needed to supplement the fine screens.

Secondary and Tertiary Treatment

Secondary/Tertiary treatment at the WRP will consist of an activated sludge process for reduction of Biological Oxygen Demand and nutrient removal, coupled with a membrane bioreactor technology (MBR) for solids-liquids separation. Initially a four-stage Bardenpho process will be used for reduction of BOD and nutrient removal to meet the limit of 10 mg/L N, and a goal of 8 mg/L N. The biological treatment basins can then be modified to accommodate a four-stage Bardenpho configuration to comply with the potential nutrient limit of 4 mg/L N in the future if necessary.

The MBR process combines biological treatment with filtration to achieve secondary treatment plus advanced filtration. The MBR process replaces the function of secondary clarifiers and granular media (usually sand filters) or cloth disk filtration in the conventional wastewater treatment process.

Biological Treatment: The biological treatment process proposed provides, activated sludge treatment of physically screened raw wastewater. The two proposed biological treatment basins provide anoxic zones, aerobic zones (aerated), and swing zones (capability for both anoxic and aerobic treatment) for maximum removal of nutrients by microorganisms in various metabolic processes. Initial design will be for a 1.0 MGD flow with the ability to reduce Total Nitrogen to below 10 mg/L, with a goal of 8 mg/L or less, with the system designed for modification to a system in the future that would remove more nutrients if needed.

The biological treatment basins are configured as single-pass basins with internal baffles to separate the different zones and facilitate serpentine flow and minimize potential for back-mixing between adjacent zones.

Screened wastewater and returned activated sludge (from the MBR process) will be combined and equally distributed between the biological treatment basins. This mixed liquor will flow through a first anoxic zone, a swing zone, two aerobic zones, and a second swing zone. The swing zones can be operated as either an aerobic or anoxic zone depending on what is needed to remove nutrients in the wastewater. (There will also be future pump and piping from the second aeration zone back to the anoxic zone if needed in order to achieve additional denitrification to remove more nutrients prior to filtration).

At the end of the swing zone, the mixed liquor will then flow into a wet well. Pumps will transfer the mixed liquor to the MBR basins. The return activated sludge from the MBR process will overflow by gravity to the beginning of the biological treatment process.

The dimensions of the biological treatment process area are approximately 200 feet by 60 feet.

MBR: The purpose of the MBR process is to remove suspended solids in the mixed liquor from the biological treatment process and provide a high-quality filtrate that can be effectively disinfected with UV disinfection methods. Membranes are immersed in open tanks of aerated mixed liquor. The membranes are hollow fibers with fixed pore size to prevent suspended solids from passing through. (The suspended solids resulting from the MBR system are the return activated sludge). Permeate pumps create a partial vacuum in the membrane fibers driving flow from the biological treatment process to the inside of the membrane fibers, filtering

the flow. Each bundle of fibers consists of 370 sq. ft. of membrane area. These bundles are grouped together and the number of total bundles needed is determined by plant flow requirements. Two MBR systems are recommended for Phase 1 with the equivalent of one more train being needed for the second and third phases.

Scum and Waste Activated Sludge: The waste activated sludge and scum are removed on a regular basis at the end of the biological treatment process and just prior to the MBR system. They are discharged into the regional sewer collection system via the WAS pump station.

UV Disinfection: The UV Disinfection facility ensures an adequate dose of UV radiation to disinfect the treated effluent. It uses UV lamps to disinfect water. The process inactivates pathogens and other microorganisms, but does not leave a residual disinfecting effect in the recycled water. Therefore, after primary disinfection with UV light, bulk sodium hypochlorite will be used to provide chlorine residual in the recycled water distribution system at the reclaimed water pump station. The performance standard for primary disinfection is a total coliform concentration of 2.2 MPN/100 ml maximum for the 7-day median; 1 instance per month of treated effluent exceeding 23 MPN/100 ml; and a single sample with a concentration of 240 MPN/100 ml.

The typical UV Disinfection system is an open channel, low pressure, high output system, with an automatic cleaning system for the UV lamps. However, the PDR recommends a close-channel UV system. The overall system consists of the inlet pipe from the MBR process, three UV treatment systems (with room for an additional system) and a pipe to the reclaimed water pump system. The UV treatment area is approximately 43 feet by 30 feet.

Reclaimed Water Pump Station: A reclaimed water pump station will be provided to convey the treated water for off-site and on-site recycled water uses. It will consist of a concrete clear well with vertical turbine pumps, a hydropneumatic tank to maintain plant water system pressure, a back pulse tank to store reclaimed water for membrane back pulsing, and a chlorine-feed to the clear well to provide residual chlorination of the reclaimed water.

Odor Control: An in-ground biofilter will be installed for treating foul air in the screening room of the headworks. Further, the treatment of biosolids (WAS) will not occur at this WRP site, as the WAS will be returned to the regional sewer collection system and delivered to the Westside WRP for final treatment and management.

Operations Building: An administrative, small process laboratory and bathroom facilities will be located within the WRP.

Backup Generator: An emergency backup diesel generator (approximately 350 kW) will be maintained on the property to ensure the facility can continue to operate in the event of a electrical power outage. This generator will be located on a concrete pad adjacent to the WRP structure and an 8-hour capacity above ground diesel fuel storage tank, with a leak collection containment system, will be installed adjacent to the generator.

WAS Return: WAS will be pumped from the proposed Apple Valley WRP into the existing Otoe Road Lift Station force main to allow conveyance to the downstream portion of the collection

and ultimate treatment at the Westside WRP. A wet well will be installed to facilitate transfer of the WAS to the Otoe Road Lift Station.

Electrical Requirements and Control System: Estimated power supply requirements for the Hesperia WRP are estimated to be 700 kW per day. The WRP be constructed to receive power from the local utility (SCE) and distribute it through the plant. A 480 VAC line will connect underground to adjacent electricity distribution lines owned by Southern California Edison (SCE). As described above, there will be a back-up generator incorporated in the WRP to ensure the plant can operate in the event electricity is temporarily unavailable from SCE.

The instrumentation and control system will be designed to monitor and control the WRP. Allen Bradley Programmable Logic Controllers will be used for this function at the proposed WRP. The PLCs would communicate using Ethernet over a fiber optic backbone. Within a control room, the operators will interface with the system using the Wonderware Human Machine Interface (HMI). At key locations in the plant, an Industrial Personal Computer will be loaded with Wonderware screens, and would also serve as remote HMIs.

Recycled Water Lift Station: The WRP would include a recycled water lift station that will pump the recycled water to the proposed percolation basins. This facility will consist of a concrete clear well pump station, vertical turbine pumps, a hydropneumatic tank to maintain plant water system pressure, a back pulse tank to store reclaimed water for membrane back pulsing, and a chlorine feed system to provide the residual chlorination of the reclaimed water. Refer to Figure 3-12 for this facility's location.

WRP Offsite Facilities

There are three types of offsite facilities.

Hesperia (Wastewater) Lift Station, Gravity Sewer and Force Main: Wastewater would be diverted from a 12-inch gravity sewer near the intersection of Mojave Street and Maple Avenue, approximately one half mile from the Alternative B proposed treatment plant, by an 18-inch sewer (~550 feet in length) and connect to the proposed lift station. The lift station would be a building of approximately 16 feet by 16 feet square surrounded by a 6-foot-high block wall on an approximate 10,000 square foot parcel on the south side of Mojave. A 12-inch force main (~1,500 feet in length) will connect the lift station to the proposed Alternative B WRP. Refer to Figure 3-7. Equipment at the lift station would include a wet well and centrifugal pump. The Hesperia Lift Station site plan is provided as Figure 3-17, and a layout is shown on Figure 3-18. Lift station odor control would be through a biofiltration system. Moist wood chips would allow microbes in the chips to remove hydrogen sulfide. The proposed lift station would be constructed in three phases: 1.0 MGD capacity; 2.0 MGD capacity; and potentially 4.0 MGD capacity. Phases 2 and 3 would include equipment upgrades. Phase two would add a pump impeller and motor and phase three would include installation of a third pump.

A wastewater force main from the Mojave Street lift station to the Alternative A Hesperia WRP site (west of I-15) would range from approximately 15,000 feet to 18,000 feet.

Recycled Water Pipeline: The recycled water pipeline would take water from the WRP to the percolation ponds and would require approximately 32,000 feet of 12 inch pipe. This pipeline

would be installed primarily in existing street right-of-way and would cross the railroad tracks at Mesa Street.

Percolation Ponds: Percolation ponds of approximately 12 acres in area would be built on an approximately 16-acre site where percolation, would occur. The ponds would be constructed by grading the basins, including use of as much excavated material as possible to form the basin berms. Any excess excavated material would be made available to local contractors to be used as fill material.

Site Design Concepts: The facility design envisions placement of the facilities within one or two structures on the property, and one lift station structure. Figure 3-14 shows a conceptual design for the Apple Valley WRP that is also representative of the Hesperia WRP and wastewater lift station designs. It includes a non-metallic roof; CMU split face facade; site security fencing; and screening through use of berms and landscaping. Structure colors would be consistent with City design requirements, such as desert tones with split face blocks, etc. Exterior lighting will be minimal for safety purposes and will be directed onto the WRP site. Sound attenuation for noise facility components will be provided, either directly on the equipment or through structural controls. The nearest residence is about 50 feet from the lift station facility and about 500 feet from residences as both the Alternative A and Alternative B WRP sites. Noise attenuation at the WRP will conform with City noise requirements.

3.4.3 Eastside Regional WRP Potential Site Area

As previously described, there are no proposed facilities proposed for the Eastside site at this time. VVWRA's intent is to compile a data base and constraints analysis for this several hundred acre area in order to define those areas that have substantial development limitations and those areas that have minimal environmental resource limitations. A compilation of site specific environmental resource constraints and opportunities will be included in this document.

3.4.4 Construction Scenario

A general construction scenario has been developed to assist the reviewer to understand how the proposed facilities will be installed and the amount of time required for their construction. This information also provides essential data for making the air quality impact forecast using the most current URBEMIS emission forecast model.

WRP
The construction activities for a WRP consist of the following range of activities: excavation; mass grading of approximately three acres of land, fine grading for each area proposed for development with facilities, such as access roads, parking, storage and landscaping; installation of WRP piping, electricity lines and other required support infrastructure; construction of foundations; construction of above ground facilities, including the exterior structure; installation of treatment equipment; and assembly of materials required for treatment.

Standard construction equipment will be used, ranging from dozers, graders and cranes, to backhoes. It is anticipated that the maximum number of construction personnel on the WRP project site on any given day will be 100. A maximum number of truck deliveries, probably during pouring of concrete for facilities, are forecasted at 25 per day. Note that to install wet

wells and other similar facilities at the WRP, excavation may be as deep as 25-30 feet in certain areas. Construction of a WRP is expected to require about 18 months.

Lift Station Modification
The modification of the existing lift station will be completed simultaneously with the Apple Valley WRP construction of the WRP and would likely take up to 18 months to complete.

Hesperia Wastewater Lift Station
The same sequence as outlined for the WRP will be required for the Hesperia Lift Station. It will require approximately 12 months to complete this facility.

Percolation Ponds
The percolation ponds would be located on an approximately 20-acre site and an estimated 16 of these acres would be used for percolation ponds. Standard construction equipment will be used, ranging from dozers and graders to backhoes. It is anticipated that the maximum number of construction personnel on the project site on any given day will be 25. The construction of the percolation ponds would occur simultaneously with the construction of the WRP and would take up to eight months to complete.

Sewer Collection, Force Mains and Recycled Water Pipelines
It is assumed that a sewer installation team can install approximately 200 to 400 lineal feet of sewer, force mains, or recycled water line per day. A team consists of the following:

200-400 feet of pipeline installed per day
1 Excavator
1 Backhoe
1 Paver
1 Roller
1 Water truck
10 Dump/delivery trucks (80 miles round trip distance)
Employees (11 members per team)

The emissions calculations are based upon the above assumptions for each pipeline installation team. For air emission calculations it is further assumed that pipelines will be installed concurrent with the treatment plant construction. Two teams will be installing pipelines for a maximum total of 800 lineal feet per day. It is assumed that sewer line installation will occur 100 days per year, resulting in the installation of up to 80,000 lineal feet of pipeline over this time period.

3.5 ENTITLEMENTS, APPROVALS AND OTHER AGENCY PARTICIPATION

There are a wide range of other agencies that may have an interest in or be involved in the review and approval of the recycled water program and facilities outlined above. The following list is not intended to be exhaustive, but it provides a sense of the agencies that may participate in the review or approval of this program and specific projects. The potential participating agencies are arranged based on the individual topics contained in the Initial Study Environmental Checklist Form, provided as Chapter 8, Subchapter 8.1 of this document.

Aesthetics: Local jurisdictions, Town of Apple Valley and City of Hesperia, possibly including building permits

Air Quality: Mojave Desert Air Quality Management District, permit the operation of the WDRs and possibly individual pieces of equipment (fx, stand-by emergency generator)

Biology: If listed species are involved the U.S. Fish and Wildlife Service and/or California Department of Fish and Game (CDFG) may have to issue incidental take permits. Local jurisdictions issue plant removal permits, for Joshua trees and native cactus. The Corps of Engineers, CDFG and Lahontan Regional Board may need to participate in review of any discharge of fill into or alteration of a streambed.

Hazards/Hazardous Materials or Wastes: The County Division of Airports and Caltrans Division of Airports may be involved with a review of airport operation conflicts related to the Alternative 2 percolation basin site in the Town of Apple Valley due to proximity to the Apple Valley Airport.

Hydrology & Water Quality: A wide range of participation will occur for these issues. The Lahontan Regional Board will issue Waste Discharge Requirements (WDR) and probably Water Recycling Requirements (WRR) for use of recycled water at both proposed WRPs. The California Department of Public Health must also review and approve the use of recycled water. The County and local jurisdictions must ensure that stormwater discharges from each of the facility sites meet the current municipal stormwater sewer standards (MS4); and a Stormwater Pollution Prevention Plan (SWPPP) must be implemented for each location where disturbance exceeds one acre. To construct a Notice of Intent must be submitted to the State Water Resources Control Board for a General Construction Permit, which is then enforced by the Regional Board. Finally, if any flood hazard areas are affected by the proposed project, County Flood Control, the City and Town, and FEMA may perform reviews for this project.

Land Use & Planning: The Town and City may issue conditional use permits for the facility and then building permits for construction, including grading and excavations.

Noise: Compliance with local jurisdiction Noise Element and Noise Ordinance may be necessary due to proximity of facilities to sensitive noise receptors.

Population/ Housing: No permits or review agencies are involved with the proposed project, with the possible exception of regional planning agencies, such as Southern California Association of Governments.

Other Interested Agencies:

Bureau of Reclamation: This agency may provide funding and VVWRA envisions publishing a joint EIR/EA to fulfill this agency's National Environmental Policy Act (NEPA) requirements.

Mojave Water Agency: This agency will provide review based on its role and the Mojave Basin Watermaster and general management for groundwater resources within the Alto Subbasin.

No other reviewing or permitting agencies have been identified.

3.6 CUMULATIVE PROJECTS

There are several major public utility projects under in the process of review and approval. These projects include the following:

- Modifications to the Westside WRP
- Replacement of certain segments of the regional sewer collection system, including the Nanticoke Gravity Sewer and the Santa Fe Avenue Sewer
- Mojave Water Agency implementation of the R3 Project, including new wells and pipelines.
- City of Victorville/Southern California Logistics Airport (SCLA) energy and wastewater treatment projects at the Airport.

3.7 USES OF THIS ENVIRONMENTAL IMPACT REPORT

Before any of the proposed facilities can be implemented, VVWRA must approve the proposed projects and the cities may issue development permits for the WRPs and percolation basins. These approvals will rely upon this Draft EIR as the basis for compliance with the CEQA. The cities would utilize the Draft EIR as CEQA Responsible Agencies. Other agencies listed under Section 3.5 may use this document as CEQA Responsible Agencies to grant other approvals or entitlements.

FIGURE 3-1
Regional Location

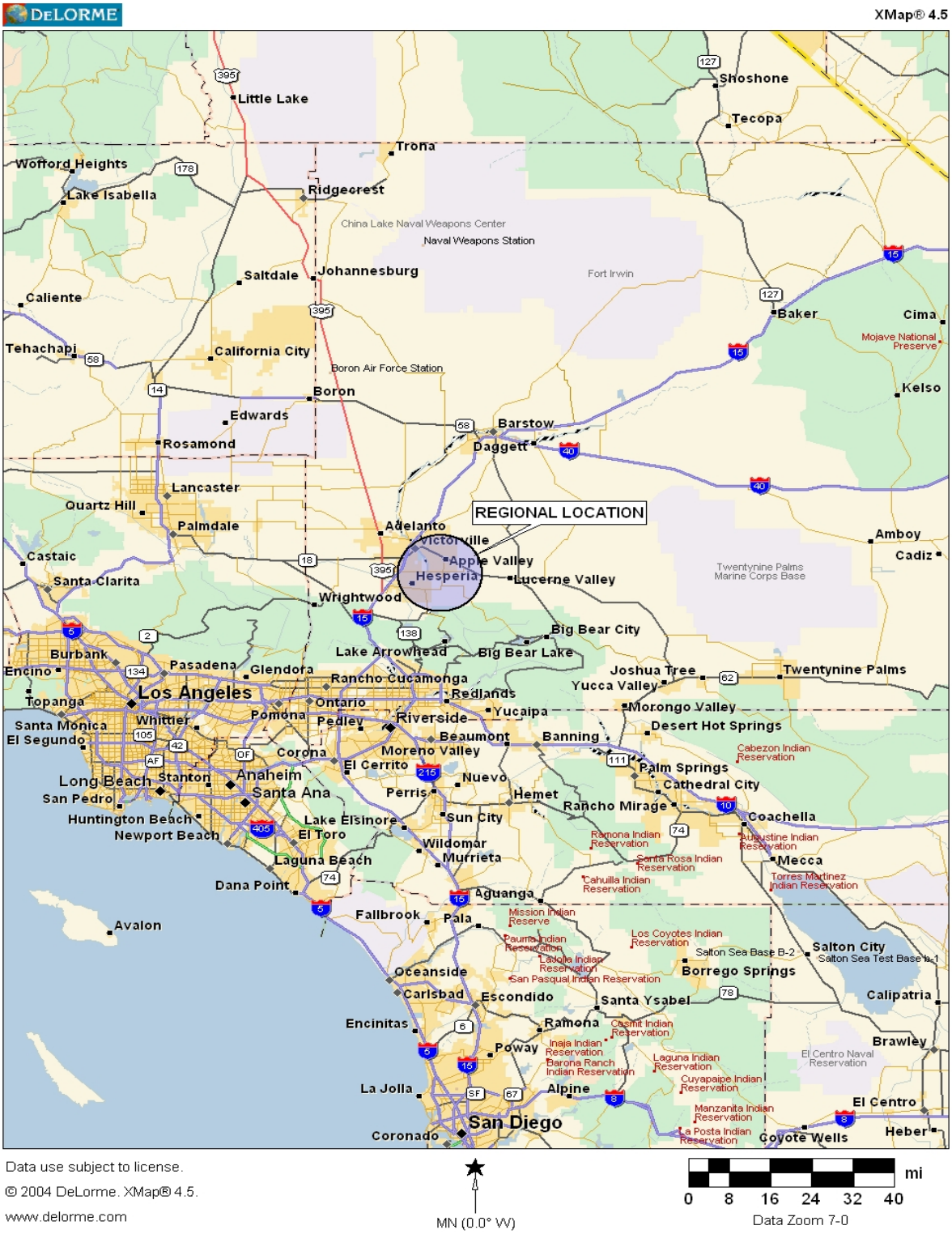

FIGURE 3-2
VVWRA Service Boundary

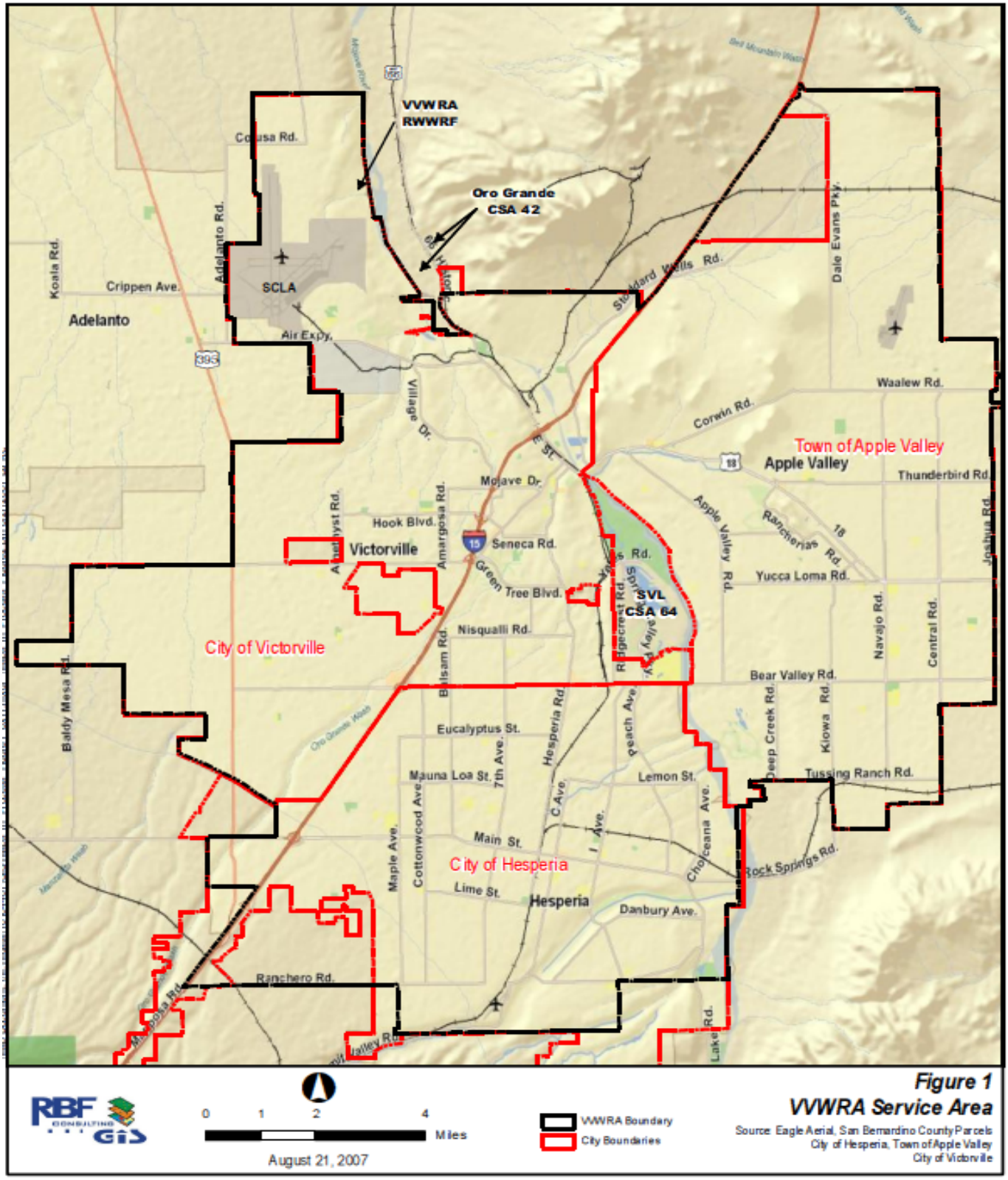

Source: RBF Consulting

FIGURE 3-3
Apple Valley WRP Facilities

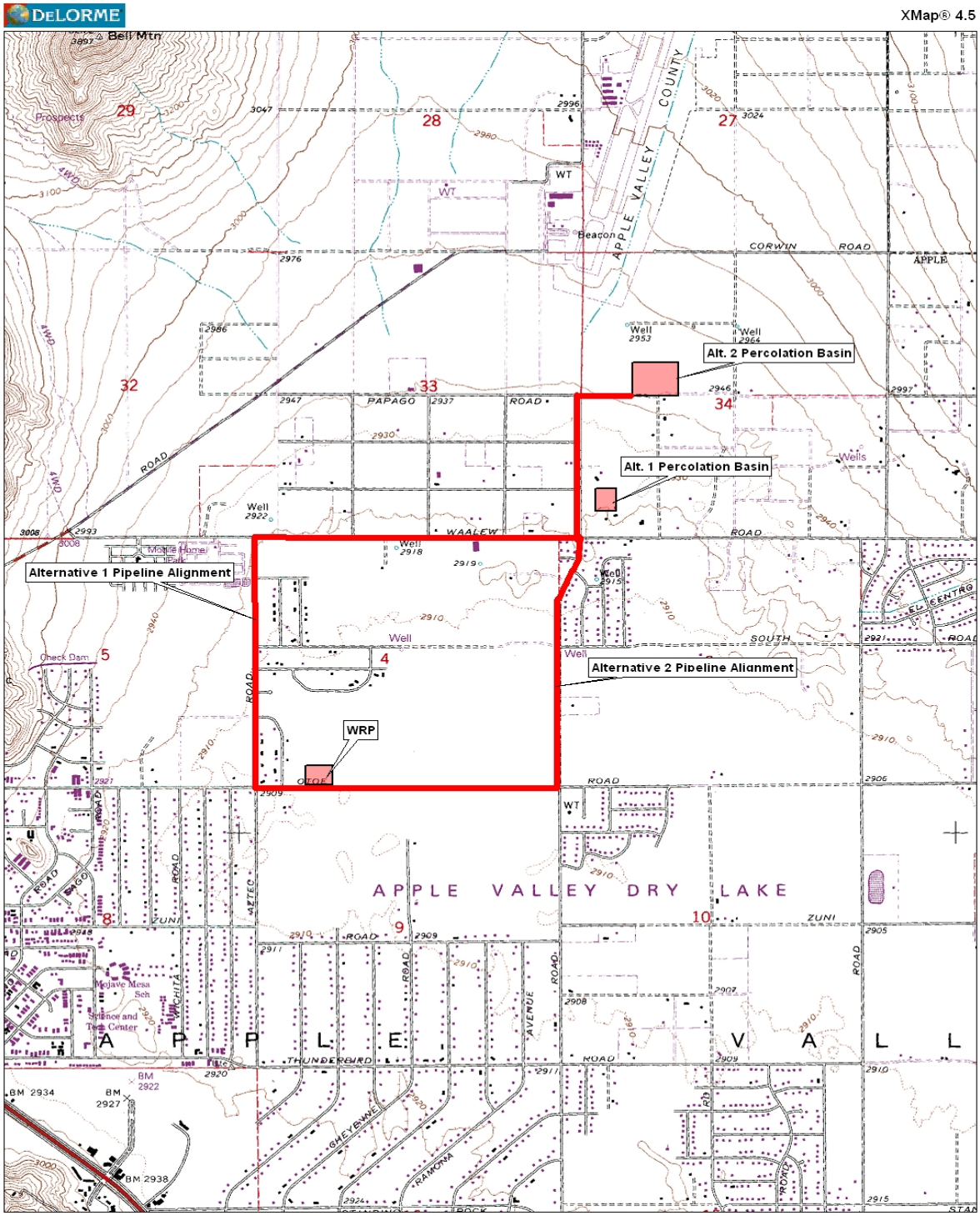

FIGURE 3-4
Apple Valley Water Reclamation Plant
Percolation Ponds Site – Alternatives 1 & 2

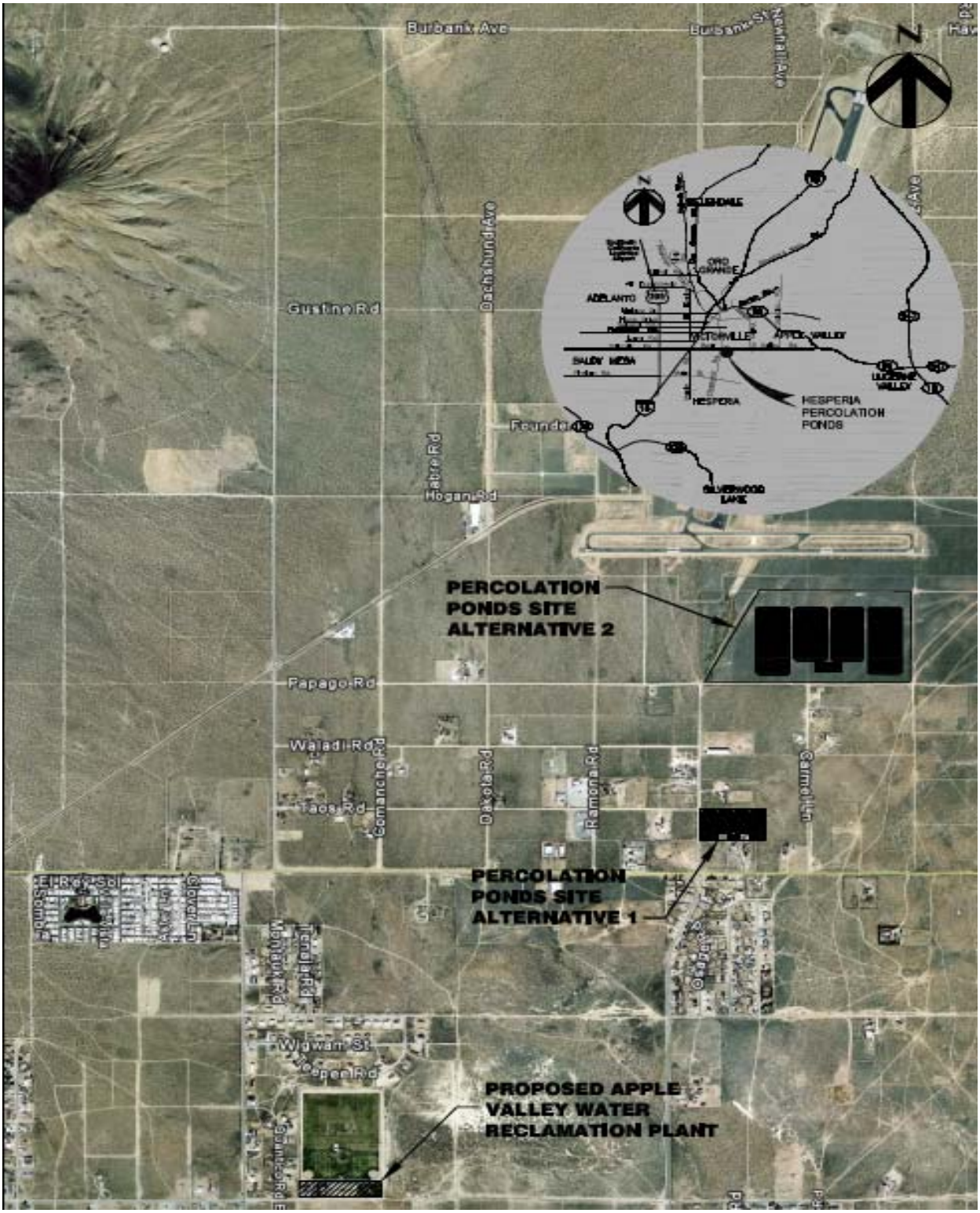

Source: Carollo Engineers, *Town of Apple Valley WRP PDR), December 2009*

FIGURE 3-5
Hesperia Lift Station and Force Main Alignment Alternatives

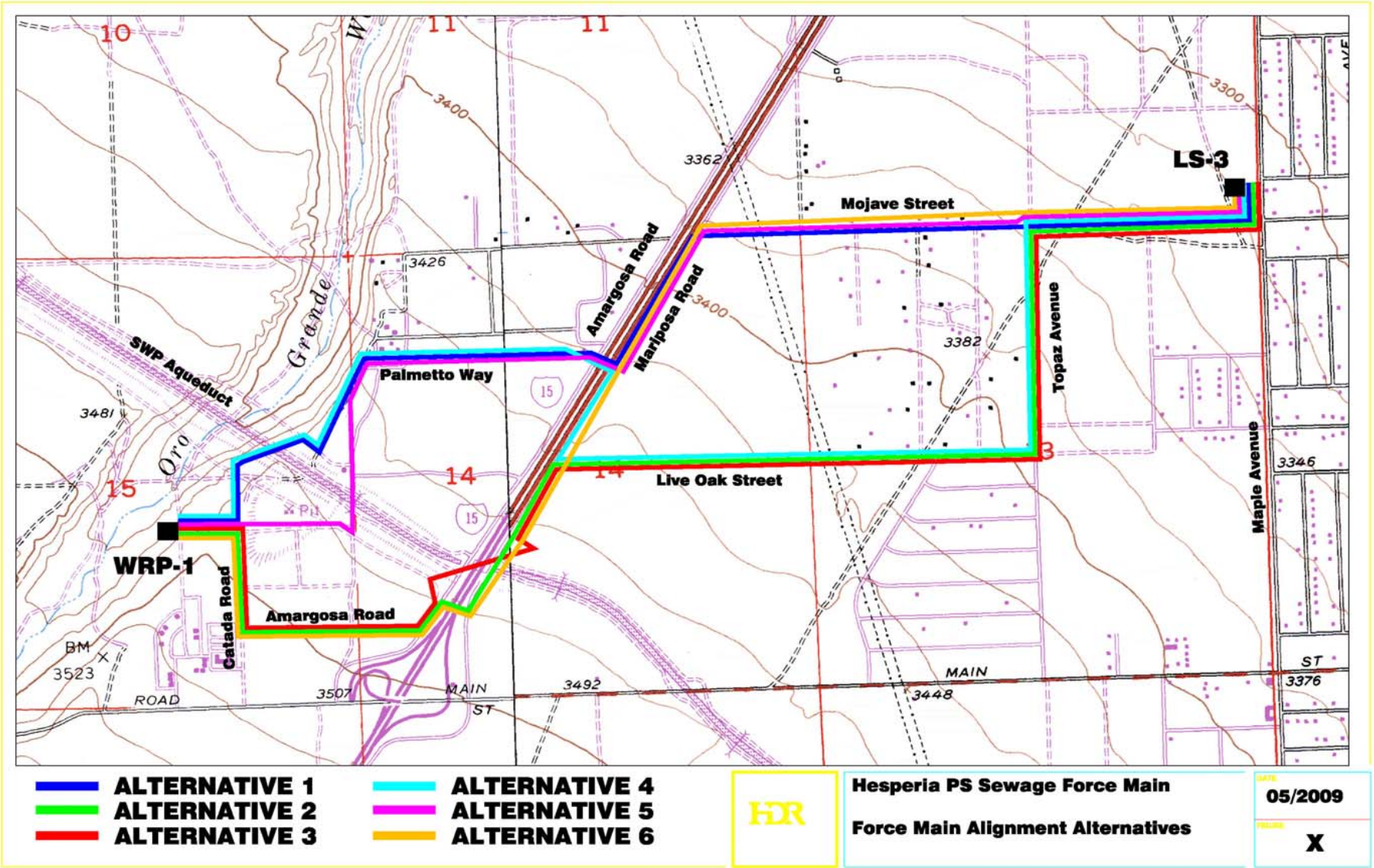

Source: Carollo / HDR, *City of Hesperia Lift Station and Force Main PDR, December 2009*

FIGURE 3-6
Alternative A – WRP West of Interstate Highway 15

Source: Carollo / HDR, *City of Hesperia Lift Station and Force Main PDR, December 2009*

FIGURE 3-7
Lift Station Location Map

Source: Carollo / HDR, *City of Hesperia Lift Station and Force Main PDR, December 2009*

FIGURE 3-8
Hesperia WRF Facility Sites

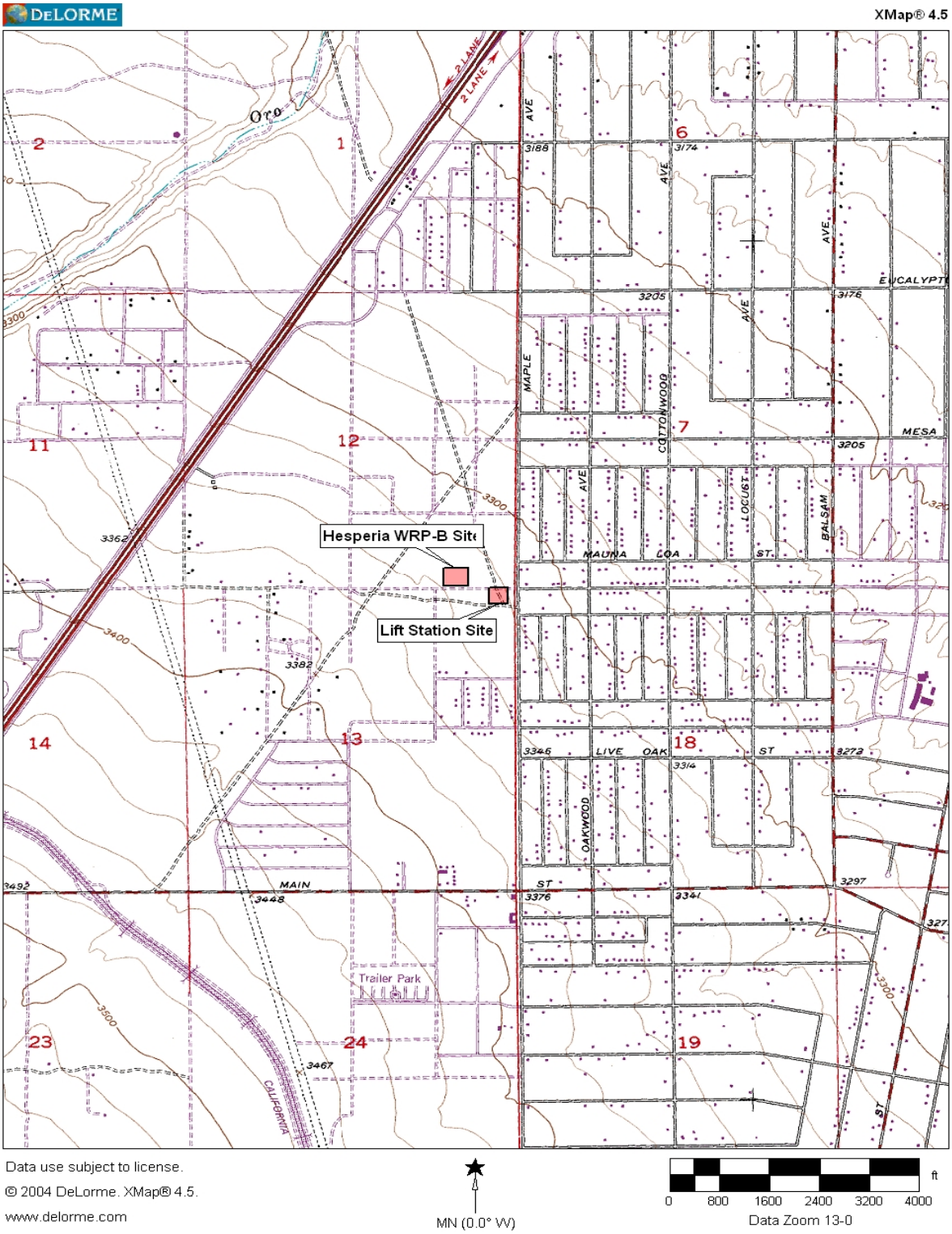

FIGURE 3-9
Overall Site Plan

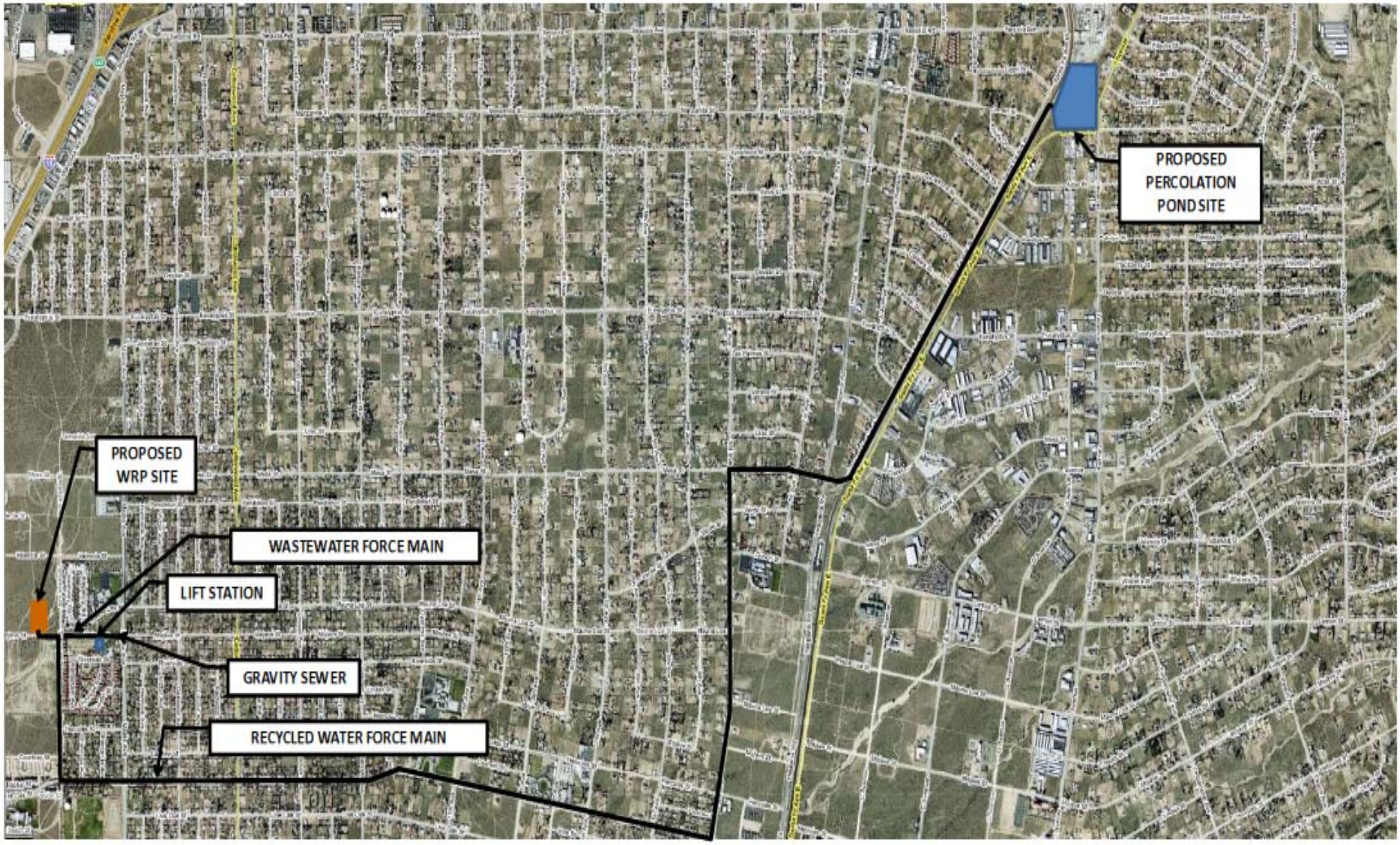

Source: Carollo / HDR, *City of Hesperia Lift Station and Force Main PDR, December 2009*

FIGURE 3-10
Eastside Regional WTTP Vicinity Map

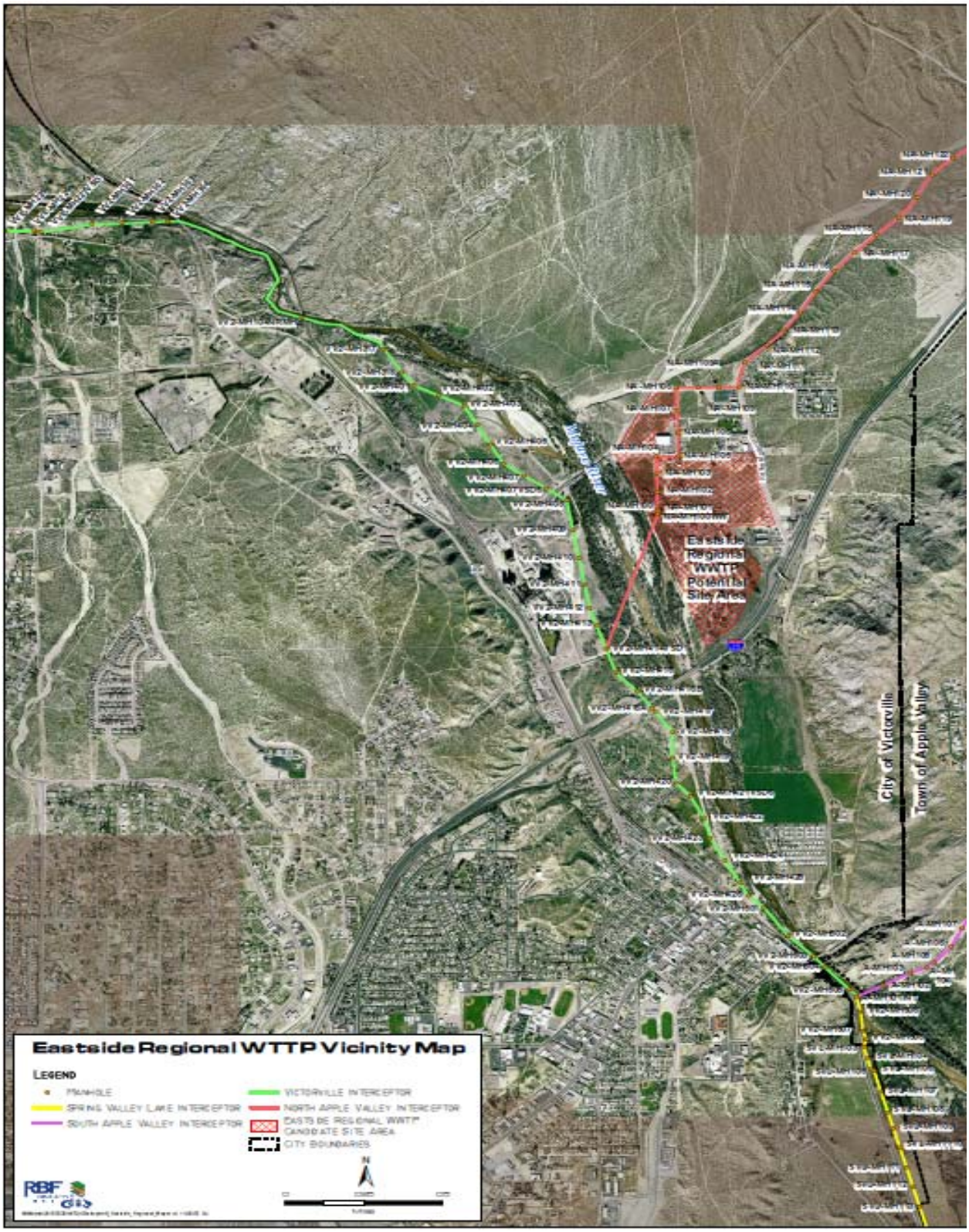

Source: *2009*

FIGURE 3-11
Eastside Regional WRP Potential Area

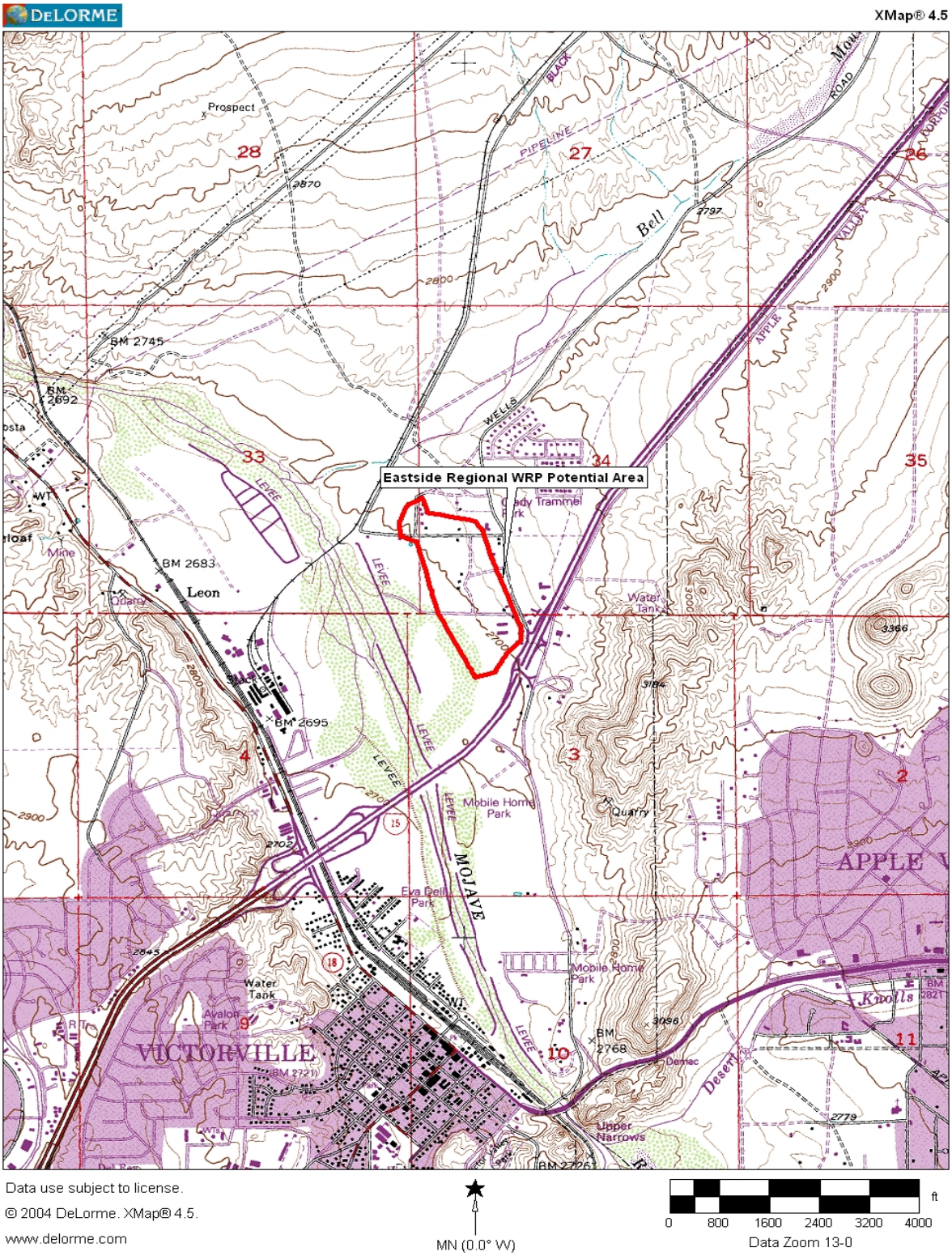

FIGURE 3-12
Site Layout

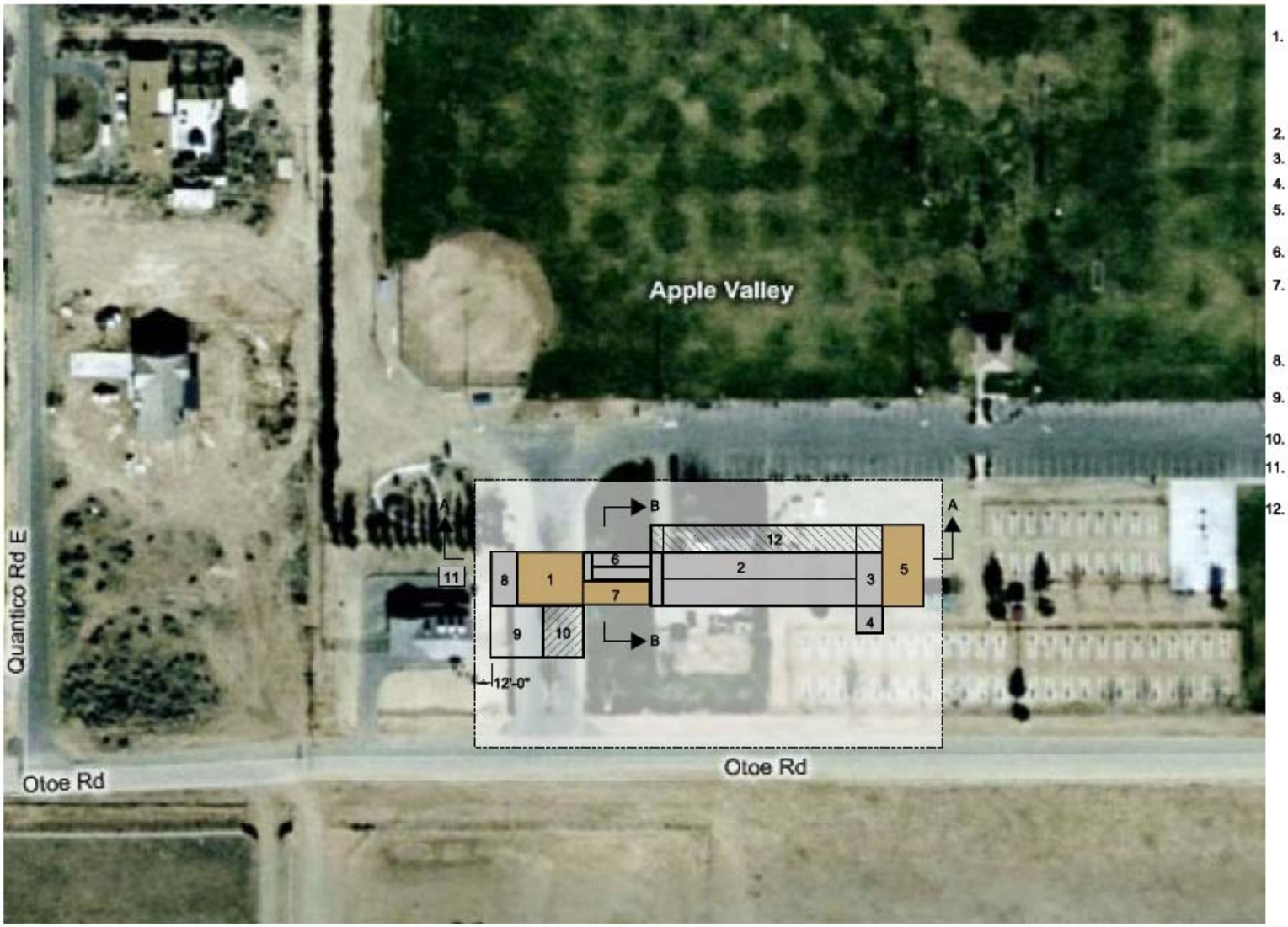

LEGEND

1. HEADWORKS/ MBR FACILITY BUILDING. FLOOR LEVEL: INFLUENT SCREENS, CITRIC ACID/ SODIUM HYPO STORAGE & FEED. LOWER LEVEL: UV SYSTEM & PERMEATE PUMPS
2. BIOLOGICAL BASIN
3. FEED FORWARD PUMP STATION
4. WAS PUMP STATION
5. PROCESS ELECTRICAL/ BLOWER BUILDING
6. SUBMERGED MEMBRANES
7. MBR ELECTRICAL/ BLOWER BUILDING FLOOR LEVEL: ELECTRICAL ROOM LOWER LEVEL: MEMBRANE AIR SCOUR BLOWERS
8. RECLAIMED WATER PUMP STATION
9. BIOFILTER (HEADWORKS ODOR CONTROL)
10. GRIT REMOVAL (FUTURE)
11. INFLUENT LIFT STATION EXPANSION
12. AERATION BASIN PHASE 2 EXPANSION (2 MGD)

Source: Carollo Engineers, *Town of Apple Valley WRP PDR, December 2009*

FIGURE 3-13
Process Flow Diagram

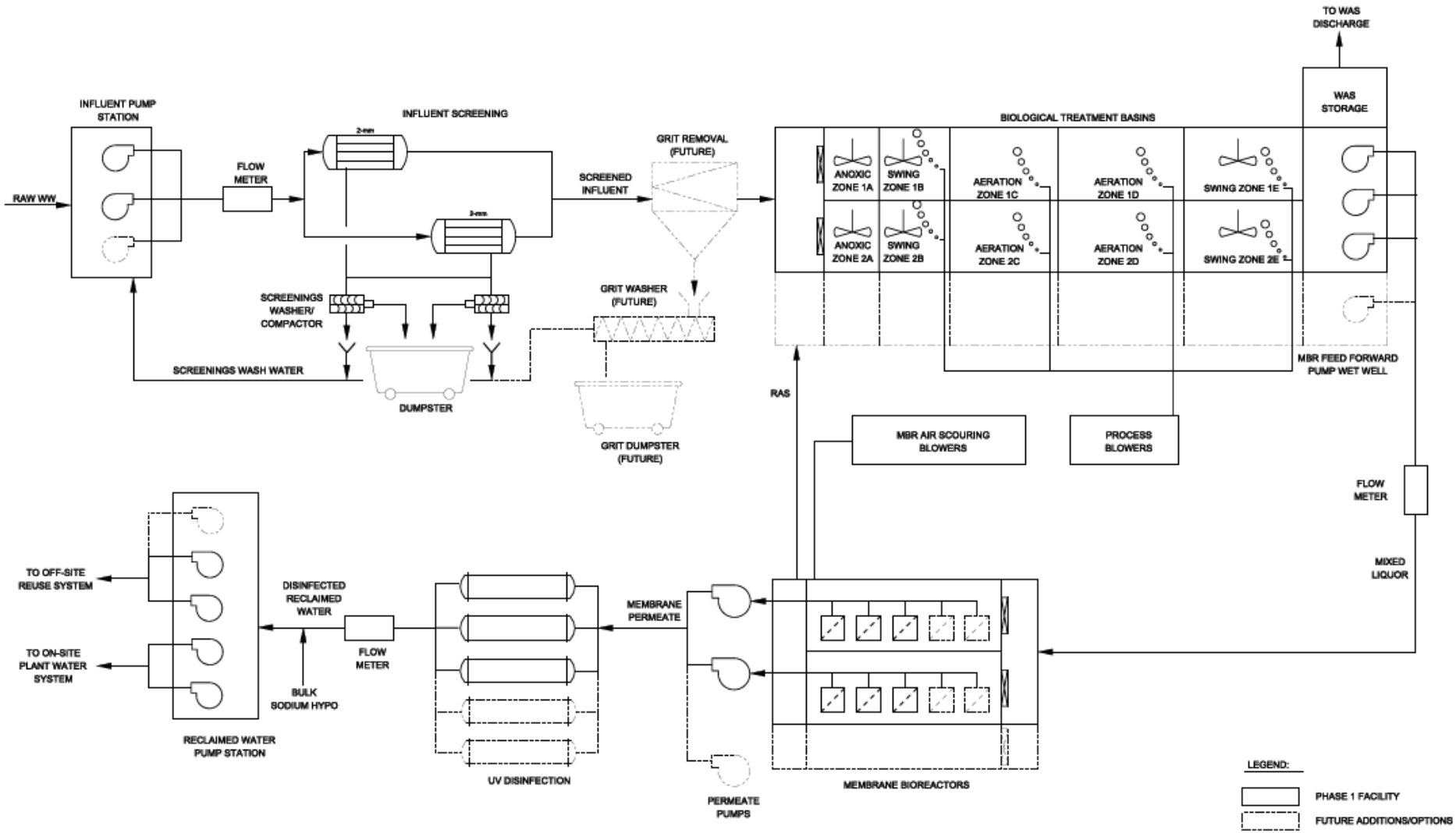

Source: Carollo Engineers, *Town of Apple Valley WRP PDR, December 2009*

FIGURE 3-14
Conceptual Architectural Elevations

Source: Carollo Engineers, *Town of Apple Valley WRP PDR, December 2009*

FIGURE 3-15
Site Layout

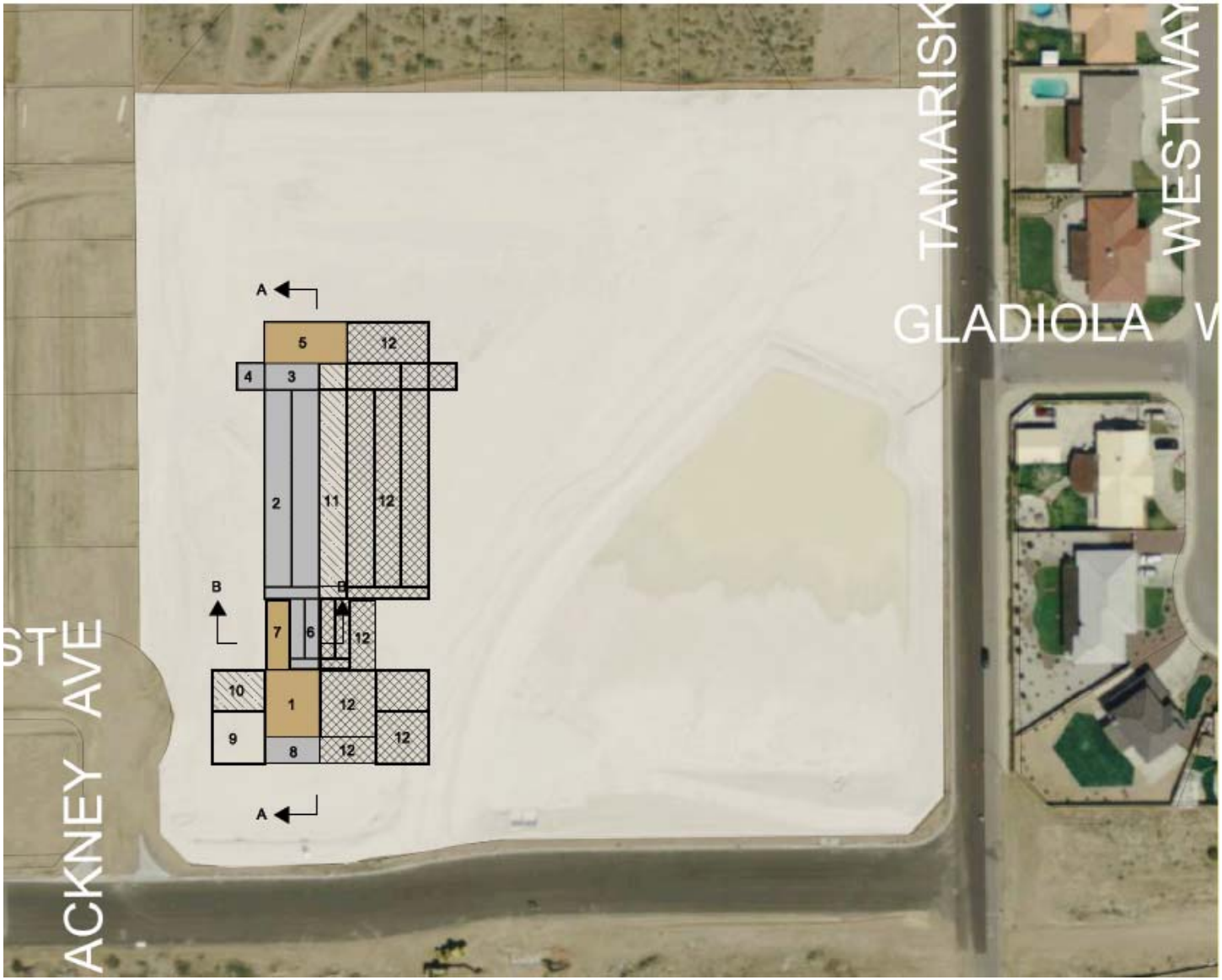

LEGEND

1. HEADWORKS/ MBR FACILITY BUILDING.
   FLOOR LEVEL: INFLUENT SCREENS, CITRIC ACID/ SODIUM HYPO STORAGE & FEED.
   LOWER LEVEL: UV SYSTEM & PERMEATE PUMPS
2. BIOLOGICAL BASIN
3. FEED FORWARD PUMP STATION
4. WAS PUMP STATION
5. PROCESS ELECTRICAL/ BLOWER BUILDING
6. SUBMERGED MEMBRANES
7. MBR ELECTRICAL/ BLOWER BUILDING
   FLOOR LEVEL: ELECTRICAL ROOM
   LOWER LEVEL: MEMBRANE AIR SCOUR BLOWERS
8. RECLAIMED WATER PUMP STATION
9. BIOFILTER (HEADWORKS ODOR CONTROL)
10. GRIT REMOVAL (FUTURE)
11. AERATION BASIN PHASE 2 EXPANSION (2 MGD)
12. PHASE 3 EXPANSION (4 MGD)

NORTH

Source: Carollo Engineers, *City of Hesperia WRP PDR, December 2009*

FIGURE 3-16
Process Flow Diagram

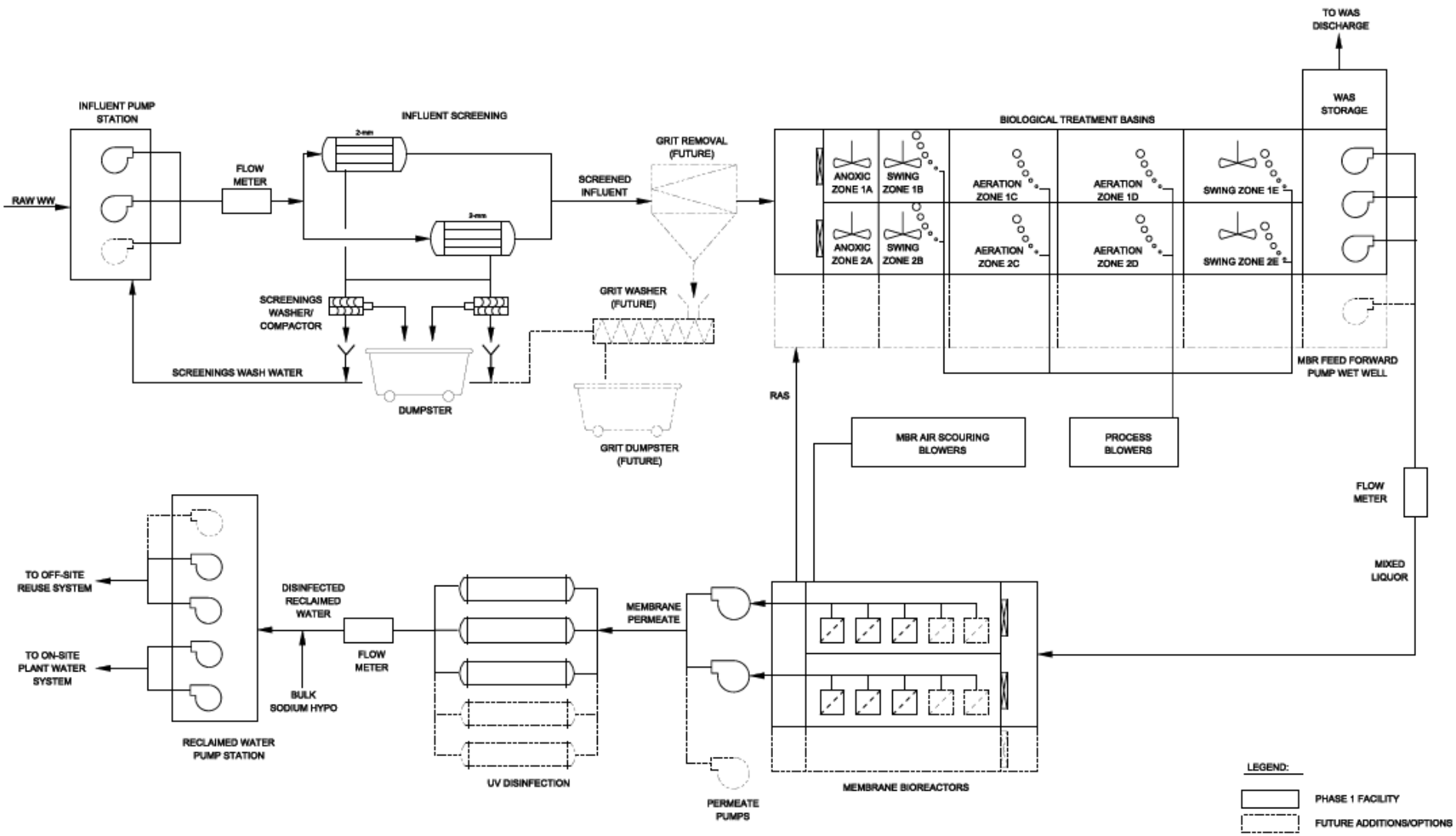

Source: Carollo Engineers, *City of Hesperia WRP PDR, December 2009*

FIGURE 3-17
Lift Station Site Plan

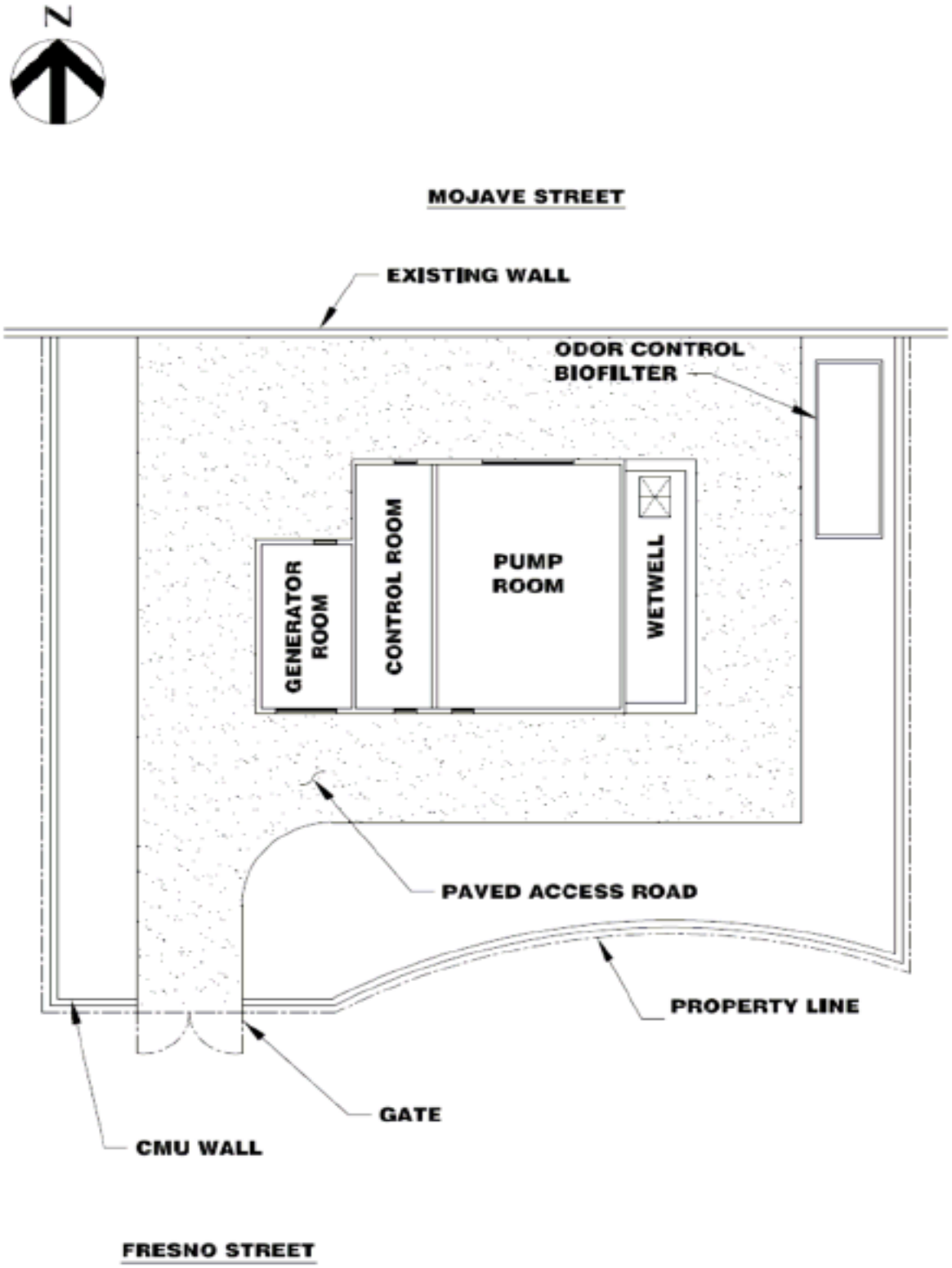

Source: Carollo / HDR, *City of Hesperia Lift Station and Force Main PDR, December 2009*

FIGURE 3-18
Hesperia Lift Station – Section 2

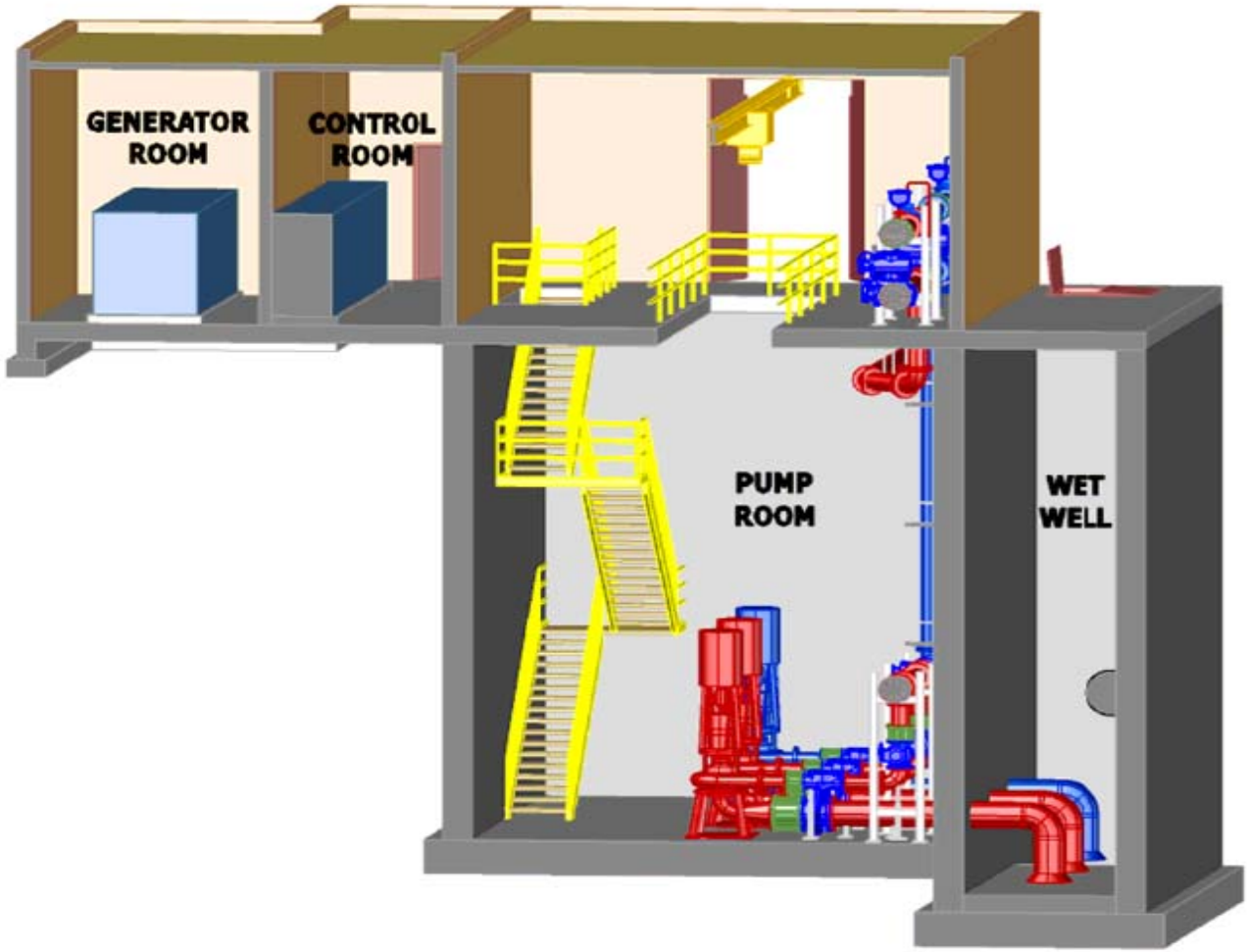

PHASE 1

PHASE 2

SECTION
NTS

Source: Carollo / HDR, *City of Hesperia Lift Station and Force Main PDR, December 2009*

CHAPTER 4 – ENVIRONMENTAL IMPACT EVALUATION

All Chapter 4 figures are located at the end of each subchapter; not immediately following their reference in text.

4.1 BACKGROUND

The Victor Valley Wastewater Reclamation Authority (VVWRA or Authority) will serve as the Lead Agency under the California Environmental Quality Act (CEQA) and will coordinate the preparation of an Environmental Impact Report (EIR) that will evaluate the potential significant environmental impacts that may result from constructing and operating occupying the "proposed project." The proposed project EIR will evaluate the potential significant environmental impacts that may result from constructing and operating two new subregional wastewater reclamation facilities in the Victor Valley: the Town of Apple Valley Wastewater Reclamation Plant and the City of Hesperia Wastewater Reclamation Plant, and Related Facilities. The wastewater would be captured upstream of the existing VVWRA Westside Wastewater Reclamation Plant (WRP) and be treated to meet Title 22 standards before delivery to customers for use as recycled water to offset demand for potable water. The recycled water produced from the two proposed WRPs could be used for landscape irrigation, industrial operations and recharge to the regional groundwater aquifer in the Alto Subbasin of the Mojave River Basin.

This program to implement subregional wastewater reclamation facilities in the Victor Valley is anticipated to be implemented over an extended period of up to 10 years. As funding becomes available during this period, the Town of Apple Valley and the City of Hesperia WRPs will be installed and begin operation with 1.0 MGD average flow of tertiary treatment capability. The recycled water produced from these WRPs will be utilized for landscape irrigation and industrial applications, and excess recycled water would be delivered to percolation ponds for recharge (percolation and possible future aquifer storage and recovery (ASR) wells) to the regional groundwater aquifer. As part of this overall recycled water program, a future WRP is also envisioned at the Eastside WRP site with the same initial capacity. As additional wastewater is generated and additional recycled water users are identified in the future, these WRPs may have their treatment capacity expanded in phases up to a maximum of 4.0 MGD average flow as currently envisioned. Expansion beyond this capacity is not anticipated or evaluated in this document. At this time no specific evaluation of a WRP is proposed at the Eastside WRP site, only an environmental constraints analysis will be performed.

Based on the findings of the Initial Study, the Authority concluded that a project EIR must be prepared to address the proposed installation and operation of the Hesperia and Apple Valley subregional WRPs. The decision to prepare an EIR is documented in the Initial Study and Notice of Preparation, which is provided in this document as Subchapter 8.1. The decision to prepare an EIR was based on the finding that the proposed project may have one or more significant effects on the environment in Victor Valley, including areas immediately adjacent to the proposed WRPs.

This chapter of the Draft Environmental Impact Report (DEIR) provides the detailed information used to forecast the type and significance of potential environmental impacts that implementation of the proposed project and related actions can cause if the project is implemented as described in Chapter 3, the Project Description.

In the following subchapters, each of the environmental topics identified in the Initial Study and further elaborated in Chapter 2 of this document as having a potential to cause significant environmental impact is evaluated. The environmental impact analysis section for each environmental topic is arranged in the following manner:

a. An introduction that summarizes the specific issues of concern for each subchapter, identified in the Initial Study and Notice of Preparation scoping process;

b. A summary of the current or existing environmental setting for each physical resource or human infrastructure system is presented as the baseline from which impacts will be forecast;

c. Based on stated assumptions, the potential direct and indirect impacts are forecast and the significance of impacts is assessed without applying any mitigation using identified criteria or thresholds of significance;

d. Recommended measures that can be implemented to substantially lessen potential environmental impacts are identified, and their effectiveness in reducing impacts to non-significant levels is evaluated;

e. Potential cumulative environmental impacts are assessed under each environmental topic, where applicable; and

f. Significant and unavoidable environmental impacts and any significant impacts that may be caused by implementing mitigation measures are addressed.

To provide the reviewer with a criterion or set of criteria with which to evaluate the significance of potential environmental impacts, this document provides issue specific criteria, i.e. thresholds of significance, for each topic considered in this DEIR. These criteria are either standard thresholds, established by law or policy (such as ambient air quality standards or thresholds of significance established by the Mojave Desert Air Quality Management District) or project-specific evaluation thresholds that are developed with the VVWRA Staff and used specifically for this project. After comparing the forecasted physical changes in the environment that may be caused by implementing the proposed project with the issue specific significance threshold criterion or criteria, a conclusion is reached on whether the proposed project has the potential to cause a significant environmental impact for the issue being evaluated.

Where appropriate and feasible, measures to reduce potential significant environmental impacts are identified and described in this section of the DEIR. Over the past several years, mitigation has evolved in scope and complexity. As environmental issues are addressed in a progressive and adaptive manner, previous measures developed to mitigate project specific impacts are eventually integrated into local, regional, state and federal statutes, rules and regulations, such as the Uniform Building Code or Water Quality Management Plans. Mitigation measures that become statutes or rules and regulations become mandatory requirements (not discretionary) and they no longer need to be identified as additional mitigation applicable to the Project, although they are often referenced to demonstrate that identified environmental impacts are capable of being and will be mitigated.

The text in the following subchapters summarizes all of the various measures anticipated to be incorporated into the project to reduce potential significant environmental effects, either to the extent feasible or to a level of nonsignificance. After determining the degree of mitigation that can be achieved by the proposed measures and after identifying any potential adverse impacts that the mitigation measures can cause, a conclusion is provided regarding the remaining significant and/or unavoidable adverse impact for each environmental topic, if any.

This document utilizes conservative (worst case) assumptions in making impact forecasts based on the assumption that the impact forecasts should over-predict (if they cannot be absolutely quantified) consequences, rather than under-predict them. Many technical studies were prepared for this document and they are incorporated by summarizing the technical information in this document to ensure technical accuracy. These technical studies themselves are compiled in a separate volume of the DEIR (Volume 2) and copies of Volume 2 will be distributed in electronic form and made available to all parties on distribution upon request. The information used and analyses performed to make impact forecasts are provided in depth in this document to allow reviewers to follow a chain of logic for each impact conclusion and to allow the reader to reach independent conclusions regarding the significance of the potential impacts described in the following subchapters.

This page left intentionally blank for pagination purposes.

4.2 AIR QUALITY

4.2.1 Introduction

This section of the DEIR focuses on the assessment of potential air quality impacts on the environment that may result from the implementation of the Town of Apple Valley and City of Hesperia subregional wastewater reclamation plants and related facilities. The Initial Study evaluation determined that implementation of the two Subregional could cause adverse impacts on air quality, primarily from nitrogen oxides (NOx), due to electricity consumption for pumps and other facilities that consume electricity in support of moving recycled water within the Basin. Depending upon the type and location of facilities being implemented, mitigation was identified to reduce construction-related air emission impacts from project implementation to a level of nonsignificance. Substantial construction emissions may also be generated from installing pipelines, installing percolation basins and constructing buildings.

4.2.2 Environmental Setting

An Air Quality Impact Analysis prepared by Giroux and Associates for the project is the basis for much of the information provided in this section. The Air Quality Technical Study is provided in Volume 2, Technical Appendices, to this document. The project is located entirely within the Mojave Desert Air Basin (MDAB) which is under the jurisdiction of the Mojave Desert Air Quality Management District (MDAQMD). The air quality regulatory jurisdictions within the project area include the U.S. Environmental Protection Agency (EPA), the California EPA, specifically the California Air Resources Board (CARB), and the MDAQMD.

4.2.2.1 Meteorology/Climate Setting

The climate of the Victor Valley is characterized by hot summers, mild winters, infrequent rainfall, moderate afternoon breezes, and generally fair weather. Average daily minimum winter temperature is 35°F, and average daily maximum summer temperature is 97°F. Temperatures typically average 62°F year-round. Rainfall within the MDAB averages around between 3 and 7 inches per year with light to moderate rain falling on only 10 days per year. The Victorville area may occasionally experience a light winter snowfall (12 inches per year)

The prevailing winds within the region provide a vehicle for visible smog to be transported from the South Coast Air Basin through the mountain passes to the MDAB. The rapid daytime heating of the lower air leads to convective activity. This exchange of upper air tends to accelerate surface winds during the warm part of the day when convection is at a maximum. During the winter, the rapid cooling of the surface layers at night retards this exchange of momentum which often results in calm winds.

The project area typically has poor air quality in the summer and good air quality in the winter due to the combination of onshore and offshore winds, summer inversions and moderate levels of air pollutant emissions generated within the air basin.

The project is located entirely within the MDAB which is under the jurisdiction of the MDAQMD. The MDAQMD has jurisdiction over the air basin in which the proposed project is located and is responsible for regulating stationary source emissions. The District has also been given the

authority to regulate mobile emissions as an indirect source. At a minimum the proposed project will require permits from the MDAQMD for back-up generators required to provide power if or when electric power is not available.

4.2.2.2 Air Quality Setting

Ambient Air Quality Standards (AAQS)

Ambient air quality standards (AAQS) are the levels of air quality considered safe, with an adequate margin of safety, to protect the public health and safety. They are designed to protect those people most susceptible to respiratory distress, such as asthmatics, the elderly, very young children, people already weakened by other disease or illness, and people engaged in strenuous work or exercise, called "sensitive receptors." Healthy adults can tolerate occasional exposure to air pollutant concentrations considerably above these minimum standards before adverse effects are observed. Recent research suggests, however, that long-term exposure to air pollution at levels that meet air quality standards may nevertheless have adverse health effects. For example, ozone exposure even at levels close to the ambient standard may lead to adverse respiratory health.

The federal Clean Air Act (CAA), the California Clean Air Act (CCAA), and the Air Quality Management Plan (AQMP), prepared and adopted by the MDAQMD, regulate air quality in the air basin. The following discussion describes the regulatory authority of the federal, state and local jurisdictions.

Federal Clean Air Act

The Federal CAA Amendments of 1990 required that the U.S. EPA review all national AAQS with respect to health impacts and propose modifications or new rules as appropriate. In addition, the amendments of the 1990 federal CAA are associated with the attainment and maintenance of air quality standards, permits and enforcement, toxic air pollutants, acid deposition, stratospheric ozone protection and motor vehicles and fuels.

The goal of Title I, the non-attainment provision, is to attain air quality standards for six criteria pollutants: ozone, oxides of nitrogen, oxides of sulfur, particulate matter (PM10), carbon monoxide, and lead. All non-attainment areas are designated or classified based on the severity of their non- attainment problem. These classifications determine the extent to which remedial actions must be taken within a given air quality planning area. The MDAB is designated as a “moderate” non-attainment area for the federal 8-hour ozone standard. The basin is an attainment area for PM-2.5, and a maintenance area for PM-10.

Federal ambient air quality standards are summarized in Table 4.2-1.

Table 4.2-1
STATE OF CALIFORNIA AIR RESOURCES BOARD AMBIENT AIR QUALITY STANDARDS

Pollutant	Average Time	California Standards [1]		National Standards [2]		
		Concentration [3]	Method [4]	Primary [3,5]	Secondary [3,6]	Method [7]
Ozone (O3)	1 Hour	0.09 ppm (180 µg/m3)	Ultraviolet Photometry	–	Same as Primary Standard	Ultraviolet Photometry
	8 Hour	0.070 ppm (137 µg/m3)		0.08 ppm (157 µg/m3)		
Respirable Particulate Matter (PM10)	24 Hour	50 µg/m3	Gravimetric or Beta Attenuation	150 µg/m3	Same as Primary Standard	Inertial Separation and Gravimetric Analysis
	Annual Arithmetic Mean	20 µg/m3		–		
Fine Particulate Matter (PM2.5)	24 Hour	No Separate State Standard		35 µg/m3	Same as Primary Standard	Inertial Separation and Gravimetric Analysis
	Annual Arithmetic Mean	12 µg/m3	Gravimetric or Beta Attenuation	15 µg/m3		
Carbon Monoxide (CO)	8 Hour	9.0 ppm (10 mg/m3)	Non-Dispersive Infrared Photometry (NDIR)	9 ppm (10 mg/m3)	None	Non-Dispersive Infrared Photometry (NDIR)
	1 Hour	20 ppm (23 mg/m3)		35 ppm (40 mg/m3)		
	8 Hour (Lake Tahoe)	6 ppm (7 mg/m3)		–	–	–
Nitrogen Dioxide (NO2) *	Annual Arithmetic Mean	0.030 ppm (56 µg/m3)	Gas Phase Chemiluminescence	0.053 ppm (100 µg/m3)	Same as Primary Standard	Gas Phase Chemiluminescence
	1 Hour	0.18 ppm (338 µg/m3		–		
Sulfur Dioxide (SO2)	Annual Arithmetic Mean	–	Ultraviolet Fluorescence	0.030 ppm (80 µg/m3)	–	Spectrophotometry (Paraosaniline Method)
	24 Hour	0.04 ppm (105 µg/m3)		0.14 ppm (365 µg/m3)	–	
	3 Hour	–		–	0.5 ppm (1300 µg/m3)	
	1 Hour	0.25 ppm (655 µg/m3)		–	–	–
Lead 8	30-Day Average	1.5 µg/m3		–	–	–
	Calendar Quarter	–		1.5 µg/m3	Same as Primary Standard	High Volume Sampler and Atomic Absorption

Pollutant	Average Time	California Standards [1]		National Standards [2]		
		Concentration [3]	Method [4]	Primary [3,5]	Secondary [3,6]	Method [7]
Visibility Reducing Particles	8 Hour	Extinction coefficient of 0.23 per kilometer – visibility of 10 miles or more (0.07 - 30 miles or more for Lake Tahoe) due to particles when relative humidity is less than 70 percent. Method: Beta Attenuation and Transmittance through Filter Tape.		**No Federal Standards**		
Sulfates	24 Hour	25 µg/m3	Ion Chromatography			
Hydrogen Sulfide	1 Hour	0.03 ppm (42 µg/m3)	Ultraviolet Fluorescence			
Vinyl Chloride 8	24 Hour	0.01 ppm (26 µg/m3)	Gas Chromatography			

Note: * On February 19, 2008, the Office of Administrative Law approved a new Nitrogen Dioxide ambient air quality standard, which lowers the 1-hour standard to 0.18 ppm and establish a new annual standard of 0.030 ppm. These changes will become effective March 20, 2008.

Footnotes

1 California standards for ozone, carbon monoxide (except Lake Tahoe), sulfur dioxide (1 and 24 hour), nitrogen dioxide, suspended particulate matter – PM10, PM2.5, and visibility reducing particles, are values that are not to be exceeded. All others are not to be equaled or exceeded. California ambient air quality standards are listed in the Table of Standards in Section 70200 of Title 17 of the California Code of Regulations.

2 National standards (other than ozone, particulate matter, and those based on annual averages or annual arithmetic mean) are not to be exceeded more than once a year. The ozone standard is attained when the fourth highest eight hour concentration in a year, averaged over three years, is equal to or less than the standard. For PM10, the 24-hour standard is attained when the expected number of days per calendar year with a 24-hour average concentration above 150 µg/m3 is equal to or less than one. For PM2.5, the 24-hour standard is attained when 98 percent of the daily concentrations, averaged over 3 years, are equal to or less than the standard. Contact U.S. EPA for further clarification and current federal policies.

3 Concentration expressed first in units in which it was promulgated. Equivalent units given in parentheses are based upon a reference temperature of 25°C and a reference pressure of 760 torr. Most measurements of air quality are to be corrected to a reference temperature of 25°C and a reference pressure of 760 torr; ppm in this table refers to ppm by volume, or micromoles of pollutant per mole of gas.

4 Any equivalent procedure which can be shown to the satisfaction of the ARB to give equivalent results at or near the level of the air quality standard may be used.

5 National Primary Standards: The levels of air quality necessary, with an adequate margin of safety to protect the public health.

6 National Secondary Standards: The levels of air quality necessary to protect the public welfare from any known or anticipated adverse effects of a pollutant.

7 Reference method as described by the EPA. An “equivalent method” of measurement may be used but must have a “consistent relationship to the reference method” and must be approved by the EPA.

8 The ARB has identified lead and vinyl chloride as 'toxic air contaminants' with no threshold level of exposure for adverse health effects determined. These actions allow for the implementation of control measures at levels below the ambient concentrations specified for these pollutants.

Source: California Air Resources Board (02/21/08)

California Clean Air Act

The CCAA, passed by the California Legislature and signed into law by the Governor in 1988, is a comprehensive air pollution control agenda for the state of California. State standards are, in most cases, more stringent than federal standards. The goal of the CCAA is to attain state air quality standards by the earliest practical date. Because California established AAQS several years before the federal action and because of unique air quality problems introduced by the restrictive dispersion meteorology in much of California, there is a considerable difference between state and national clean air standards. Those standards currently in effect in California are shown on Table 4.2-1.

The CCAA requires each air pollution control district of an air basin designated as in non-attainment of state ambient air quality standards to prepare and submit a plan for attaining and maintaining state standards. After further review of the relationship between fine particulate matter and human health effects, the California Air Resources Board (CARB) adopted new state standards on June 20, 2002 for PM2.5 that are more stringent that the federal standards. No specific control programs are in place to achieve this much more stringent standard. However, it does represent an air quality goal to dramatically reduce the adverse health effects from small-particle air pollution. Health effects from air pollutants are summarized in Table 4.2-2.

Each attainment plan must define the present and anticipated extent of non-attainment, including adopted and proposed measures to reduce emissions of the pollutant and/or its precursors, and their anticipated effectiveness; the availability and effectiveness of additional control measures; the earliest practicable attainment date; any legal, technological, or administrative impediment to developing and implementing an attainment plan; the relative significance of both natural and windblown emissions; and any additional information needed with respect to ambient air monitoring and air quality computer modeling, and estimated budgetary requirements to obtain the information.

Some of the CCAA requirements include reducing pollutants contributing to non-attainment by 5 percent per year, or 15 percent over a 3-year period, achieving an average commuter ridership of 1.3 persons per vehicle, reducing non-attainment pollutant exposures by 30 percent, and ranking control measures by implementation priorities.

There are no AAQS for non-criteria pollutants (such as diesel exhaust–the ARB identified diesel exhaust as a toxic air contaminant in 1998). Therefore, other guidelines are used to evaluate the potential air quality impact of diesel exhaust. For non-cancer effects, the California AB 2588 Air Toxics Hot Spots program criteria identify a hazard index. The hazard index (HI) is the ratio of a modeled concentration to a concentration (termed the reference exposure level) determined by the State of California Office of Environmental Health Hazard Assessment (OEHHA) below which no adverse health effects are expected to occur. This reference concentration for diesel exhaust is 5 ug/m3. If the hazard index is less than 1.0, then health effects are not expected. For cancer effects, Proposition 65 established the criteria of no significant risk level of 10 incremental cancers per one million exposed persons (10 x 10-6).

Table 4.2-2
HEALTH EFFECTS SUMMARY FOR AIR POLLUTANTS

Pollutants	Sources	Primary Effects
Ozone	Atmospheric reaction of organic gases with nitrogen oxides in sunlight.	Aggravation of respiratory and cardiovascular diseases. Irrigation of eyes. Impairment of cardiopulmonary function. Plant leaf injury.
Nitrogen Dioxide	Motor vehicle exhaust. High temperature. Stationary combustion. Atmospheric reactions.	Aggravation of respiratory illness. Reduced visibility. Reduced plant growth. Formation of acid rain.
Carbon Monoxide	Incomplete combustion of fuels and other carbon-containing substances, such as motor vehicle exhaust. Natural events, such as decomposition of organic matter.	Reduced tolerance for exercise. Impairment of mental function. Impairment of fetal development. Death at high levels of exposure. Aggravation of some heart disease (angina).
Fine Particulate Matter (PM-10)	Stationary combustion of solid fuels. Construction activities. Industrial processes. Atmospheric chemical reactions.	Reduced lung function. Aggravation of the effects of gaseous pollutants. Aggravation of respiratory and cardiorespiratory diseases. Increased cough and chest discomfort. Soiling. Reduced visibility.
Fine Particulate Matter (PM-2.5)	Fuel combustion in motor vehicles, equipment and industrial sources. Residential and agricultural burning. Industrial processes. Also, formed from photochemical reactions of other pollutants, including NOx, sulfur oxides and organics.	Increases respiratory disease. Lung damage. Cancer and premature death. Reduces visibility and results in surface soiling.
Sulfur Dioxide	Combustion of sulfur-containing fossil fuels. Smelting of sulfur-bearing metal ores. Industrial processes.	Aggravation of respiratory diseases (asthma, emphysema). Reduced lung function. Irritation of eyes. Reduced visibility. Plant injury. Deterioration of metals, textiles, leather, finishes, coating, etc.
Lead	Contaminated soil.	Impairment of blood functions and nerve construction. Behavioral and hearing problems in children.

Source: California Air Resources Board, 2002.

Air Quality Planning

The CARB coordinates and oversees both State and federal air pollution control programs in California, and has divided the State into 15 air basins. Significant authority for air quality control within each basin has been given to local Air Pollution Control Districts (APCD) or Air Quality Management Districts (AQMD) that regulate stationary source emissions and develop local non-attainment plans. The MDAQMD has jurisdiction over the air basin in which the proposed project is located and is responsible for regulating stationary source emissions, and has been given the authority to regulate mobile emissions as an indirect source.

The Mojave Desert Air Basin is comprised of 21,000 square miles consisting of four air districts, the Kern County APCD, the Antelope Valley AQMD, the Mojave Desert AQMD, and the eastern portion of the South Coast AQMD. The MDAQMD boundaries include portions of San Bernardino and Riverside counties.

Regional Air Quality

Monitoring of air quality in the project area is the responsibility of the MDAQMD. The closest monitoring stations to the various project sites are located at the Victorville Station at 14306 Park Avenue and Hesperia at Olive Street. Ozone, carbon dioxide, nitrogen oxide, 10micron diameter particulate matter (PM10) and fine particulate matter (PM-2.5) are monitored at the Victorville facility. Only Ozone and PM-10 are monitored at Hesperia. The air quality monitoring data from these stations are provided on Tables 4.2-3 and 4.2-4. Pollutant concentrations within the MDAB exceed the federal and State standards for ozone and particulate matter (PM-2.5). In addition, the basin is also a maintenance area for PM-10.

The MDAB air quality problems are caused by: unpaved road travel; construction activities; meteorological conditions and topographical constraints that slow down dispersal of pollutants out of the basin; a low ability to disperse pollutants vertically in the atmosphere; and a sunny climate that provides the photochemical energy that increases creation of ozone and other pollutants. As stated above, the MDAB is in non-attainment for ozone and particulate matter, but primary pollutants such as carbon monoxide (CO), nitrogen oxides (NOx), sulfur dioxide, sulfate, and lead do not exceed allowable levels and the MDAB is in attainment for these criteria pollutants.

Table 4.2-3
VICTORVILLE MONITORING STATION
PROJECT AREA AIR QUALITY MONITORING SUMMARY – 2003-2009
(Days Standards Were Exceeded and Maximum Observed Levels)

Pollutant/Standard	2003	2004	2005	2006	2007	2008	2009
Ozone							
1-Hour > 0.09 ppm (S)	22	8	16	9	7	16	8
8-Hour > 0.07 ppm (S)	72	39	53	47	45	59	53
8- Hour > 0.075 ppm (F)	41	19	33	28	27	30	25
Max. 1-Hour Conc. (ppm)	0.145	0.111	0.131	0.136	0.107	0.109	0.111
Max. 8-Hour Conc. (ppm)	0.126	0.091	0.107	0.105	0.091	0.098	0.097
Carbon Monoxide							
1-Hour > 20. ppm (S)	0	0	0	0	0	0	0
1-Hour > 9. ppm (S, F)	0	0	0	0	0	0	0
Max 1-Hour Conc. (ppm)	3.9	2.4	2.5	2.2	2.2	1.4	1.8
Max 8-Hour Conc. (ppm)	2.1	1.7	1.6	1.6	1.6	1.0	1.1
Nitrogen Dioxide							
1-Hour > 0.18 ppm (S)	0	0	0	0	0	0	0
Max 1-Hour Conc. (ppm)	0.090	0.080	0.077	0.079	0.071	0.074	0.064
Inhalable Particulates (PM-10)							
24-Hour > 50 $\mu g/m^3$ (S)	3/59	1/30	1/62	2/60	4/56	2/58	17/?[1]
24-Hour > 150 $\mu g/m^3$ (F)	1/49	0/26	0/59	0/52	1/56	**0/58**	-
Max. 24-Hr. Conc. ($\mu g/m^3$)	169.	53.	57.	56.	339. [1]	72.	307. [1]
Ultra-Fine Particulates (PM-2.5)							
24-Hour > 65 $\mu g/m^3$ (F)	0/108	0/124	0/109	0/63	0/64	0/56	NA
24-Hour > 35 $\mu g/m^3$ (F)*	0/108	0/124	0/109	0/63	0/64	0/56	NA
Max. 24-Hr. Conc. ($\mu g/m^3$)	28.0	34.0	27.0	22.0	28.0	19.0	NA

Notes: * reduced to 35 $\mu g/m^3$ in 2006
[1] data excluded due to high wind events
NA = not yet available

Source: Mojave Desert Air Basin-Victorville Air Monitoring Station Data Summary

Table 4.2-4
HESPERIA MONITORING STATION
PROJECT AREA AIR QUALITY MONITORING SUMMARY – 2003-2009
(Days Standards Were Exceeded and Maximum Observed Levels)

Pollutant/Standard	2003	2004	2005	2006	2007	2008	2009
Ozone							
1-Hour > 0.09 ppm (S)	43	28	41	22	24	29	18
8-Hour > 0.07 ppm (S)	93	67	89	76	75	80	64
8- Hour > 0.075 ppm (F)	70	53	67	50	47	58	43
Max. 1-Hour Conc. (ppm)	0.163	0.138	0.140	0.148	0.132	0.132	-
Max. 8-Hour Conc. (ppm)	0.133	0.133	0.130	0.127	0.128	0.124	0.101
Inhalable Particulates (PM-10)							
24-Hour > 50 $\mu g/m^3$ (S)	3/60	0/30	1/58	1/56	4/60	3/56	NA
24-Hour > 150 $\mu g/m^3$ (F)	0/60	0/30	0/58	0/56	0/60	**0/56**	NA
Max. 24-Hr. Conc. ($\mu g/m^3$)	119.	41.	53.	53.	88.	72.	NA

Notes: NA= not yet available

Source: Mojave Desert Air Basin-Hesperia Air Monitoring Station Data Summary.

4.2.3 Project Impacts

This section assesses potentially significant environmental impacts to air quality resulting from implementing the Town of Apple Valley and City of Hesperia Subregional Wastewater Reclamation Plants and Related Facilities Project. Section 4.2.3.1 sets forth the threshold criteria used to determine the significance of air quality impacts under State CEQA Guidelines, as well as under regional MDAQMD policies.

4.2.3.1 Significance Criteria

Appendix G of the California CEQA Guidelines offers the tests of air quality impact significance that are included in the standard Initial Study checklist. Air quality impacts are considered significant if they cause clean air standards to be violated where they are currently met, or if they will measurably contribute to an existing violation of standards. Any substantial emissions of air contaminants for which there is no safe exposure, or nuisance emissions such as dust or odors, may also be considered a significant impact.

Appendix G of the California CEQA Guidelines offers the following five tests of air quality impact significance. A project would have a potentially significant impact on air quality if it:

a. Conflicts with or obstructs implementation of the applicable air quality plan,

b. Violates any air quality standard or contributes substantially to an existing or projected air quality violation,

c. Results in a cumulatively considerable net increase in any criteria pollutant for which the project region is non-attainment under an applicable federal or state ambient air quality standard (including releasing emissions which exceed quantitative thresholds for ozone precursors),

d. Exposes sensitive receptors to substantial pollutant concentrations, and

e. Has a substantial, demonstrable negative aesthetic effect.

Further, Appendix I of the California CEQA guidelines states that a project could have a significant impact on air quality if it:

- Creates objectionable odors affecting a substantial number of people, and
- Alters air movement, moisture, or temperature, or causes a change in climate, either locally or regionally.

The MDAQMD identifies specific quantitative emission thresholds that are recommended to local agencies for determining significance of air emissions from a specific project. These thresholds are listed in Tables 4.2-5.

Table 4.2-5
MDAQMD EMISSIONS THRESHOLDS

Pollutant	Threshold (lb/day)	Threshold (tons/year)
Carbon Monoxide (CO)	548	100
Sulfur Oxides (SO2)	137	25
Reactive Organic Compounds (ROC)	137	25
Nitrogen Oxide (NOx)	137	25
Particulate Matter (PM10)	82	15

Section 176(c) of the Clean Air Act Amendments of 1990 prohibits federal participation in projects that would impede implementation of the state implementation plan (SIP) for federal non-attainment pollutants. If the project-related emissions from construction and operations are less than specified "*de minimis*" levels, no further SIP consistency demonstration is required. The MDAB is designated as a "moderate" non-attainment area for the federal 8-hour ozone standard. The Basin is a maintenance area for PM-10. Based upon these designations, the following emissions levels identified in Table 4.2-6 (below) are presumed evidence of SIP conformity:

Table 4.2-6
FEDERAL SIGNIFICANCE THRESHOLDS

Pollutant	Threshold (tons/year)
Nitrogen Oxide (NOx)	50
Reactive Organic Compounds (ROC)	50
Particulate Matter (PM2.5)	100
Particulate Matter (PM10)	100

In its CEQA Handbook (2007), the MDAQMD states that the following additional indicators should be used as screening criteria to determine if a project needs additional air quality evaluation:

- Generates total emissions (direct and indirect) in excess of the MDAQMD thresholds.
- Generate a violation of any ambient air quality standard when added to the local background
- Creates odors that could be considered a nuisance by any substantial number of people.
- Does not conform to applicable attainment or maintenance plans.
- Emits hazardous or toxic emissions that create an excess cancer risk of more than 10 in a million or a non-cancerous health index (HI) or more than 1.0.

Except in special circumstances, the CEQA Handbook notes that meeting the emissions thresholds is normally sufficient to demonstrate a less-than-significant impact.

4.2.3.2 Project Impact Analysis

Potential short-term air quality impacts attributable to the project are generally due to grading and construction, including onsite generation of fugitive dust, equipment exhaust, off-gasing of paving materials, and offsite emissions from construction employee commuting and/or trucks delivering building materials. Potential long-term air quality impacts are generally due to increased electrical consumption from equipment that provides water treatment and supply. The project involves the following project components: installation of approximately 79,000 lineal feet of pipeline; installation of percolation ponds; installation of one new lift station within the City of Hesperia and the modification of the existing lift station within the Town of Apple Valley; and, installation of a wastewater reclamation plant within the Town of Apple Valley and within the City of Hesperia. Emissions from these activities were calculated in an air quality technical report prepared by Giroux & Associates, which is provided as Appendix 1 in Volume 2, Technical Appendices, to this DEIR. Much of this information is brought forward in the following analysis to allow the reviewer to ascertain how the project emissions were forecast.

- **Would the proposed project interfere with the attainment of the federal or state ambient air quality standards by either violating or contributing to an existing or projected air quality violation? Would it conflict with or obstruct implementation of the applicable air quality plan?**

Short-term Construction Emissions

Construction activities include: excavation, mass grading, fine grading, road and parking area construction, pipeline installation, installation of electrical lines and other required support infrastructure, construction of foundations, construction and installation of above-ground facilities and equipment, and assembly and installation of treatment facilities. Heavy equipment is used to excavate, grade, and level. Trucks are used to haul away excavation material and to bring construction equipment and materials to the site. Equipment activity levels vary considerably throughout the construction of a project as well as on any given day. However, based on the construction scenario identified in Chapter 3, Project Description, the following air emission forecast has been compiled (refer to Volume 2, Technical Appendices).

Pipeline Phase

The pipeline phase will consist of up to a total of 200 to 400 feet of pipeline being installed each day. Soil hauling activities will occur due to the excavation of soil. Approximately 200 cubic feet of soil will be exported from the site each day. Emissions from excavation activities were estimated using an emission factor of 10 pounds per acre-day and an expected disturbed area of 0.5 acres. The pipeline phase will also consist of indirect carbon dioxide emissions from the manufacturing of steel. Volatile organic compounds (VOC) emissions are also expected to occur as a result of paving operations. The maximum number of acres paved per day during the pipeline phase will be 0.6 acre and the maximum amount of pipeline installed per day will be five tons.

Emissions from pipeline installation occur from fugitive dust, equipment exhaust, worker trips, pavement off-gas and carbon dioxide emissions due to the manufacture of steel. Maximum daily emissions from fugitive dust and pavement off-gas were generated using emission factors from URBEMIS 2007. Maximum daily emissions from off-road equipment were calculated using the CARB (California Air Resources Board) off-road model emission factors. Criteria pollutant emissions from pipeline construction activities are summarized in Table 4.2-7.

Table 4.2-7
PIPELINE CONSTRUCTION ACTIVITY EMISSIONS (pounds/day)

Activity	ROG	NOx	CO	SO_2	PM-10	PM-2.5	CO_2
Pipe Installation (160 days Hesperia, 83 days Apple Valley)							
No Mitigation	6.7	59.4	30.1	0.0	13.2	5.0	7,087.2
With Mitigation	6.7	53.8	30.1	0.0	4.9	1.9	7,087.2
MDAQMD Threshold	137	137	548	137	82	-	-

Source: URBEMIS2007 Model, Output in Appendix

In addition, a construction crew of 11 persons will be utilized during construction activities. A round trip commute distance of 50 miles per employee was assumed. The on-road emissions from construction crew commuting related to pipeline installation activities are summarized in Table 4.2.8

Table 4.2-8
PIPELINE 2010 ON-ROAD EMISSIONS FROM CREW COMMUTING (pounds/day)

Activity	ROG	NOx	CO	PM-10	PM-2.5
Car and Light Truck	0.5	0.5	4.5	0.4	0.3

The combined total worst-case emissions from mitigated construction emissions and employee commuting are summarized in Table 4.2.9.

Table 4.2-9
COMBINED EMISSIONS FROM WATER PIPELINE INSTALLATION AND EMPLOYEE COMMUTING (pounds/day)

Activity	ROG	NOx	CO	PM-10	PM-2.5
TOTAL	7.2	54.3	34.6	5.3	2.2
MDAQMD Threshold	137.	137.	548.	82.	-

Percolation Ponds Phase
The percolation pond phase of the project will include the installation of percolation ponds with an area of approximately 16 acres within the Town of Apple Valley and the installation of percolation ponds with an area of approximately 12 acres within the City of Hesperia, as described within Chapter 3, Project Description. Emissions from percolation pond construction occur from fugitive dust due to mass grading activities, equipment exhaust, and worker trips, facility construction, and equipment installation. Mass grading activities will consist of approximately two acres of soil being disturbed each day and 250 cubic feet of soil being exported from the site each day.

Maximum daily emissions from fugitive dust and pavement off-gas were generated using emission factors from URBEMIS 2007. Maximum daily emissions from off-road equipment were calculated using the CARB off-road model emission factors and worker trips were generated using EMFAC 2007 emission factors for on-road vehicles.

Criteria pollutant emissions from percolation pond construction activities are summarized in Table 4.2-10.

Table 4.2-10
PERCOLATION POND CONSTRUCTION ACTIVITY EMISSIONS (pounds/day)
(8 months Hesperia, 6 months Apple Valley)

Activity	ROG	NOx	CO	SO_2	PM-10	PM-2.5	CO_2
Grading							
No Mitigation	2.9	23.5	13.0	0.0	41.2	9.4	2,371.1
With Mitigation	2.9	20.0	13.0	0.0	14.6	3.2	2,371.1
Paving and Construction							
No Mitigation	3.0	17.6	12.6	0.0	1.5	1.4	1,753.4
With Mitigation	3.0	15.0	12.6	0.0	0.3	0.2	1,753.4
MDAQMD Threshold	137	137	548	137	82	-	-

Source: URBEMIS2007 Model, Output in Appendix

In addition, a construction crew of 25 persons will be utilized. A round trip commute distance of 50 miles per employee was assumed. The on-road emissions from construction crew commuting related to percolation pond construction activities are summarized in Table 4.2-11.

Table 4.2-11
PERCOLATION POND 2010 ON-ROAD EMISSIONS FROM CREW COMMUTING (pounds/day)

Activity	ROG	NOx	CO	PM-10	PM-2.5
Car and Light Truck	1.1	1.1	10.3	0.1	0.1

The combined total worst case emissions from mitigated construction emissions and employee commuting are summarized in Table 4.2-12.

Table 4.2-12
PERCOLATION POND CONSTRUCTION AND EMPLOYEE COMMUTING (pounds/day)

Activity	ROG	NOx	CO	PM-10	PM-2.5
TOTAL	4.1	21.1	23.3	14.7	3.3
MDAQMD Threshold	137.	137.	548.	82.	-

Lift Station Phase

The lift station phase of the project will include the installation of a new recycled water lift station within the City of Hesperia and modification of the existing Otoe Lift Station within the Town of Apple Valley, as identified within Chapter 3, Project Description. Emissions from lift station construction occur from fugitive dust due to mass grading activities, equipment exhaust, worker trips, cement and steel manufacturing, and architectural coating activities. Mass grading activities will consist of approximately one half an acre of soil being disturbed each day and 100 cubic feet of soil being exported from the site each day. Mitigation measures during the mass

grading activities of the percolation pond phase involve watering the active areas of the site two times daily.

Maximum daily emissions from fugitive dust were generated using emission factors from URBEMIS 2007. Maximum daily emissions from off-road equipment were calculated using the CARB off-road model emission factor and worker trips were generated using EMFAC 2007 emission factors for on-road vehicles. Indirect emissions of carbon dioxide from the manufacturing of steel were calculated using GHG Protocol emission factors and emissions of carbon dioxide due to the manufacture of cement were calculated using USEPA emission factors. Mitigation measures during the mass grading activities of the lift station phase involve watering the active areas of the site two times daily.

Operational emissions due to electricity usage were calculated using emission factors from the Climate Action Registry and the California Environmental Quality Act Handbook. Emissions from employee vehicles were calculated using EMFAC 2007 emission factors for on-road vehicles. The schedule of off-road equipment, on-road equipment, concrete usage, steel usage, and architectural coating usage for the grading and construction phases is based on information provided by TDA. The schedule of off-road equipment and on-road equipment for the foundation and trenching phases was based on default URBEMIS 2007 equipment.

Criteria pollutant emissions from lift station construction activities are summarized in Table 4.2-13.

Table 4.2-13
LIFT STATION CONSTRUCTION ACTIVITY EMISSIONS (pounds/day)
(18 months for Apple Valley, 8 months for Hesperia)

Activity	ROG	NOx	CO	SO_2	PM-10	PM-2.5	CO_2
Grading							
No Mitigation	2.4	19.4	11.3	0.0	6.0	2.0	1,939.0
With Mitigation	2.4	16.5	11.3	0.0	2.8	0.7	1,939.0
Paving and Construction							
No Mitigation	2.0	12.1	12.1	0.0	0.9	0.8	1,971.4
With Mitigation	2.0	10.9	12.1	0.0	0.3	0.3	1,971.4
MDAQMD Threshold	137	137	548	137	82	-	-

Source: URBEMIS2007 Model, Output in Appendix

In addition, a construction crew of 10 persons will be utilized. A round trip commute distance of 50 miles per employee was assumed. The on-road emissions from construction crew commuting related to lift station construction activities are summarized in Table 4.2-14.

Table 4.2-14
LIFT STATION 2010 ON-ROAD EMISSIONS FROM CREW COMMUTING (pounds/day)

Activity	ROG	NOx	CO	PM-10	PM-2.5
Car and Light Truck	0.5	0.5	4.1	0.0	0.0

The combined total worst case emissions from mitigated construction emissions and employee commuting are summarized in Table 4.2-15.

Table 4.2-15
LIFT STATION CONSTRUCTION AND EMPLOYEE COMMUTING (pounds/day)

Activity	ROG	NOx	CO	PM-10	PM-2.5
TOTAL	2.9	16.9	16.1	2.8	0.7
MDAQMD Threshold	137.	137.	548.	82.	-

Wastewater Reclamation Plant Phase
The wastewater reclamation facilities phase of the project will include the installation of wastewater treatment facilities and equipment within the Town of Apple Valley and the City of Hesperia, as identified within Chapter 3, Project Description. Emissions from wastewater treatment facilities construction occur from fugitive dust due to mass grading activities, equipment exhaust, worker trips, and cement and steel manufacturing. Mass grading activities will consist of approximately one half an acre of soil being disturbed each day and 500 cubic feet of soil being exported from the site each day.

Maximum daily emissions from fugitive dust were generated using emission factors from URBEMIS 2007. Maximum daily emissions from off-road equipment were calculated using the CARB off-road model emission factors and worker trips were generated using EMFAC 2007 emission factors for on-road vehicles. Indirect emissions of carbon dioxide from the manufacturing of steel were calculated using GHG Protocol emission factors and emissions of carbon dioxide due to the manufacture of cement were calculated using USEPA emission factors. Mitigation measures during the mass grading activities of the wastewater reclamation facilities phase involves watering the active areas of the site two times daily.

Operational emissions due to electricity usage were calculated using emission factors from the Climate Action Registry and the California Environmental Quality Handbook. Emissions from employee vehicles were calculated using EMFAC 2007 emission factors for on-road vehicles. The schedule of off-road equipment, on-road equipment, concrete usage, steel usage, and architectural coating usage for grading and construction activities is based on information provided by TDA. The schedule of off-road equipment and on-road equipment for the foundation and trenching phases was based on default URBEMIS 2007 equipment.

Criteria pollutant emissions from water reclamation facilities construction activities are summarized in Table 4.2-16.

Table 4.2-16
WRP CONSTRUCTION ACTIVITY EMISSIONS (pounds/day)
18 months duration

Activity	ROG	NOx	CO	SO_2	PM-10	PM-2.5	CO_2
Grading (1 month)							
No Mitigation	2.9	23.5	13.0	0.0	8.7	2.7	2,371.1
With Mitigation	2.9	20.0	13.0	0.0	2.9	0.7	2,371.1
Facility Construction and Equipment Installation (11 months)							
No Mitigation	4.0	22.4	21.2	1.6	1.6	1.4	3,487.0
With Mitigation	4.0	19.9	21.2	1.6	0.5	0.4	3,487.0
Pipe Installation (6 months)							
No Mitigation	3.1	19.7	12.0	0.0	1.4	1.3	2,025.3
With Mitigation	3.1	16.7	12.0	0.0	0.2	0.2	2,025.3
MDAQMD Threshold	137	137	548	137	82	-	-

Source: URBEMIS2007 Model, Output in Appendix

In addition to the above construction equipment, a construction crew of 100 persons will be utilized. A round trip commute distance of 50 miles per employee was assumed. The on-road emissions from construction crew commuting related to wastewater reclamation plant construction activities are summarized in Table 4.2-17.

Table 4.2-17
WRP CONSTRUCTION 2010 ON-ROAD EMISSIONS FROM CREW COMMUTING (pounds/day)

Activity	ROG	NOx	CO	PM-10	PM-2.5
Car and Light Truck	4.6	4.6	41.3	0.4	0.3

The combined total worst case emissions from mitigated construction emissions and employee commuting are summarized in Table 4.2-18.

Table 4.2-18
WRP CONSTRUCTION AND EMPLOYEE COMMUTING (pounds/day)

Activity	ROG	NOx	CO	PM-10	PM-2.5
TOTAL	8.0	24.5	62.5	3.3	1.0
MDAQMD Threshold	137.	137.	548.	82.	-

Long-Term Operation Emissions

WRPs may release small amounts of volatile organic compounds (VOCs) during decomposition or during aeration of liquids that contain dissolved gases. VOC emissions from wastewater processing vary with process, weather, and character of the wastewater stream. For domestic sewage, EPA in its emission factor handbook (AP-42) estimates that one million gallons per day

(MGD) of processing produces 15,600 pounds of methane per year. Assuming that the VOC fraction of methane is 2 percent, one MGD produces 312 pounds of VOC per year. For a proposed 2 MGD WRP running at 100 percent of maximum capacity, annual VOC increases could total 624 pounds per year (1.7 pound per day). According to the MDAQMD CEQA and Federal Conformity Guidelines (2009), the significance threshold for VOC emissions is 25 tons per year or 137 pounds per day. Therefore, the forecast project-related VOC emissions are well below the significance thresholds set forth by the MDAQMD.

The proposed WRPs will require increased electrical consumption to process wastewater. Treating 2.0 MGD requires approximately 645 kilovolt-amp (kVA) of electrical capacity. Assuming that the average power factor is 0.8, daily power consumption for each planned WRP 10,800 kilowatts. Because electrical power is derived from the regional grid, there is no direct correlation between consumption and the location of where power-generating emissions will be released. Electricity is generated by a combination of fossil fuel combustion and renewable resources (hydro, wind, etc.). There is therefore some unquantified air pollution impact from increased electrical demand, but that impact is more regionally cumulative.

In addition, wastewater processing produces residual solid material called “sewage sludge” or “biosolids”. Sludge must be periodically hauled away for disposal which generates truck traffic. Truck traffic also will result from the delivery of chemicals and other materials. The source of the chemicals and the solids disposal location are not yet identified. A 2 MGD WRP generates approximately 600 dry tons of biosolids per year. This will require one or two truck trips per week for disposal. Inbound truck traffic is similarly very limited. Truck traffic at a small WRP such as those planned at Apple Valley or Hesperia has a negligible air quality impact.

Wastewater treatment plants historically have potential odor issues (see further discussion of odors below). However, with properly operating odor control units, the air in the immediate vicinity or various treatment processes typically has a “wet earth” odor character. Within 500 feet, additional atmospheric dilution reduces the odor to below the detection threshold of even the most odor-sensitive persons. Both the two proposed Hesperia WRP locations and the Apple Valley site have at least a 500-foot buffer zone to the closest off-site residence.

Evaluation of Emissions

Comparing the emission forecasts contained in Tables 4.2-6 through 4.2-18 to the MDAQMD emission thresholds in Table 4.2-4, the unmitigated emissions of criteria pollutants from the construction phase of the project do not exceed the regional significance thresholds. Therefore, on a case-by-case project basis construction emissions are not considered to result in significant adverse impacts. The potential for cumulative emissions from several projects underway at any given time to generate emissions above MDAQMD significance thresholds is evaluated below in the cumulative impact discussion.

In addition, operational impacts will result from wastewater processing (VOC emissions), increased regional electrical consumption, increased vehicle trips, and potential odors. As stated above, these impacts are forecast to result in negligible air quality impacts and are not projected to exceed the regional significance thresholds.

Federal Conformity

The MDAB is designated as a non-attainment area for PM2.5 and ozone. The MDAB is designated as an attainment area with a maintenance plan for carbon monoxide (CO) and nitrogen dioxide (NO2). The basin is designated as an attainment area for SO2. In addition, the basin is also a maintenance area for PM-10. The attainment status of the criteria pollutants is summarized in Table 4.2-19.

Table 4.2-19
ATTAINMENT STATUS FOR CRITERIA POLLUTANTS

Pollutants	Status
CO	Attainment
Sox	Attainment
NOx	Attainment
PM10	Attainment (maintenance plan)
PM2.5	Non-attainment
Ozone (1-hour)	Non-attainment (moderate)
Ozone (8-hour)	Non-attainment (moderate)

Construction and operational emissions do not exceed the *de minimus* thresholds established in 40 CFR 93.153. Construction and operational emissions (in tons per year) for the proposed project and the corresponding *de minimis* thresholds are provided in the air quality technical study, Appendix 1 of Volume 2 of this document (Table 22 through Table 24). The emissions from construction and operation (in tons per year) are below 20 percent of the emission inventories for the MDAB.

Toxic Air Contaminants (TACs)

Construction equipment exhaust contains carcinogenic compounds within the diesel exhaust particulates. The toxicity of diesel exhaust is evaluated relative to a 24-hour per day, 365 days per year, 70-year lifetime exposure. Public exposure to heavy equipment operating in the distance for limited periods of time will be an extremely small fraction of the above dosage assumption. The sensitive receptors along the project alignment would be exposed to a much greater amount of diesel particulates over a much longer period of time by routine roadway operations. Based on the short-term of potential diesel exhaust emissions at any given location for the project components outlined above, future construction-related heavy equipment operations exhaust would not pose a significant public health risk.

During future operations only two sources of emissions may be generated. The first source, electricity consumption, does not result in localized toxic emissions from any sources within the MDAB. Therefore, no significant TAC emissions are forecast to occur from project implementation and no adverse long-term public health impacts are forecast to result from such emissions.

The second, possible source of TAC emissions from future operations may be generated by the wastewater treatment facilities associated with treatment of wastewater. As previously stated, a potential does exist for emission of volatile organic compounds (VOC). Mitigation is provided

below to address future instances when such treatment units may emit TACs to ensure that the emissions do not pose a public health hazard to any sensitive receptors.

In summary, with or without the use of mitigation measures to control air pollutant emission, peak daily construction activity emissions for specific project will be below CEQA MDAQMD thresholds. However, the non-attainment status of the MDAB requires that best management practices be employed to minimize dust and equipment exhaust emissions. Construction emissions of air contaminants would be temporary and cease when each project is fully constructed. Mitigation measures to reduce temporary impacts of construction are included in Section 4.2.4 below.

- **Would the proposed project result in a cumulatively considerable net increase in any criteria pollutant for which the project region is in non-attainment under an applicable federal or state ambient air quality standard (including releasing emissions which exceed quantitative thresholds for ozone precursors)?**

As discussed in the previous section, the MDAB exceeds ambient air quality standards for ozone and PM2.5. The MDAB air quality problems are caused by the following factors: transport of pollutants from the upwind South Coast Air Basin; unpaved road travel; construction activities; meteorological conditions and topographical constraints that slow down dispersal of pollutants out of the basin; a low ability to disperse pollutants vertically in the atmosphere; and a sunny climate that provides the solar energy that drives photochemical reactions that create ozone and other pollutants.

As detailed above in Tables 4.2-6 through 4.2-18, emissions associated with construction of the individual project components fall below the MDAQMD CEQA significance thresholds for all criteria pollutants, with or without the use of mitigation. Because of the non-attainment status of the air basin, best management practices for control of air pollutant emissions are required to be employed to minimize dust and equipment exhaust emissions. However, the project's emissions may be considered to be cumulatively considerable based on more than one phase of construction activity occurring at the same time in the future.

As a worst case, Table 4.2-20 summarizes combined total worst case mitigated emissions from construction emissions and employee commuting assuming that all projects are under simultaneous construction.

Table 4.2-20
WORST-CASE DAILY EMISSIONS
CONSTRUCTION CREW COMMUTING AND MITIGATED CONSTRUCTION ACTIVITY (lbs/day)

Activity	ROG	NOx	CO	PM-10	PM-2.5
WRP	8.0	24.5	62.5	3.3	1.0
Pipeline	7.2	54.3	34.6	5.3	2.2
Percolation Ponds	4.1	21.1	23.3	14.7	3.3
Lift Station	2.9	16.9	16.1	2.8	0.7
Total 1 Project Site	**22.2**	**116.8**	**136.5**	**26.1**	**7.2**
Total 2 Projects Sites	**44.4**	**233.6**	**273.0**	**52.2**	**14.4**
MDAQMD Threshold	137.	137.	548.	82.	-

According to Table 4.2-20, the regional air quality impacts associated with construction, when all projects are carried out simultaneously, are shown to be less-than-significant for all air pollutants, except NOx. If project phasing is staggered, than it is possible that NOx construction emissions could be below thresholds. Individually, no project component exceeds thresholds. Only when constructed simultaneously do projects exceed emissions thresholds for NOx.

Annual construction activity emissions were calculated by URBEMIS based upon the assumptions summarized in Table 4.2-21.

Table 4.2-21
CONSTRUCTION DURATION FOR EACH PROJECT COMPONENT

Project	Location	Duration
WRP	Apple Valley	18 months
Lift Station	Apple Valley	18 months
Lift Station	Hesperia	8 months
Percolation Ponds	Apple Valley	6 months
Percolation Ponds	Hesperia	6 months
Pipeline	Hesperia	200 days
Pipeline	Apple Valley	83 days

The annual URBEMIS emissions were compared to the MDAQMD annual emission thresholds. The assumed annual distribution of activity and associated annual emissions for project construction are summarized in Table 4.2-22.

Table 4.2-22
ANNUAL AIR POLLUTION EMISSIONS – MITIGATED EMISSIONS (tons/year)

Activity	Year	ROG	NOx	CO	SO_2	PM-10	PM-2.5	CO_2
Hesperia WRP	2011*	0.51	2.59	2.66	0.00	0.09	0.06	440.4
Apple Valley WRP	2011	0.51	2.59	2.66	0.00	0.09	0.06	440.4
Hesperia Lift Station	2011	0.17	0.99	1.03	0.00	0.05	0.03	168.23
Apple Valley Lift Station	2011	0.26	1.47	1.56	0.00	0.07	9,12	254.97
Hesperia Pipeline	2011	0.53	4.30	2.40	0.00	0.68	0.21	567.02
Apple Valley Pipeline	2011	0.28	2.23	1.25	0.00	0.20	0.08	294.12
Hesperia Perc. Pond	2011	0.19	1.01	0.81	0.00	0.16	0.04	118.39
Apple Valley Perc. Pond	2011	0.19	1.01	0.81	0.00	0.16	0.04	118.39
2011 Total		**2.64**	**16.19**	**13.18**	**0.0**	**1.5**	**0.52**	**2,401.92**
WRP Construction	2012	0.20	1.28	0.78	0.00	0.09	0.08	131.65
Apple Valley Lift Station	2012	0.12	0.65	0.75	0.00	0.02	0.02	128.11
2012 Total		**0.32**	**1.93**	**1.53**	**0**	**0.11**	**0.1**	**259.76**
MDAQMD Thresholds (tons/yr)	-	25	25	100	25	15	n/a	n/a

* The year 2011 was selected for the emission forecast as it represents the most conservative emissions from equipment.

According to Table 4.2-22, emissions from project construction activities will be well below MDAQMD thresholds. As previously noted, meeting the CEQA thresholds automatically demonstrates conformance with the SIP, even with all projects overlapping in time with the majority of construction occurring in a single year and all construction beginning at the same time.

Mitigation measures are identified below to reduce emissions to the lowest achievable levels, including a measure to avoid concurrent construction of project components that would exceed the MDAB construction activity significance thresholds.

Regarding operations, operational impacts will result from wastewater processing (VOC emissions), increased regional electrical consumption, increased vehicle trips, and potential odors. As previously stated, these impacts are forecast to result in negligible air quality impacts and are not projected to exceed the regional significance thresholds.

- **Would the proposed project expose sensitive receptors to substantial pollutant concentrations?**

There are "sensitive receptors," including residences, schools, and recreational facilities that are located within 1/4 mile of the proposed Town of Apple Valley and City of Hesperia subregional wastewater reclamation plants and related facilities. The only predictable short-term toxic emissions associated with the proposed project would be those associated with diesel fuel consumed by construction equipment. Long-term emissions will include those associated with wastewater treatment processes, electricity consumption, and vehicle trips associated with material transportation and worker trips. As discussed above, TAC emissions for the proposed project are considered less than significant during both construction and operational activities associated with the Project.

- **Would the proposed project generate vehicle trips that cause a CO hot spot?**

The proposed project does not include generation of substantial traffic in conjunction with any of the proposed future the Town of Apple Valley and City of Hesperia subregional wastewater reclamation plants and related facilities operations (about 100 trips per day at most). The MDAB is classified as an attainment area for CO. In addition, the local air quality monitoring station in Victorville indicates that CO thresholds were exceeded a maximum of 3.9 days per year within the last seven years. If the worst-case intersections in the air basin have no "hot spot" potential, any local impacts near the Town of Apple Valley and City of Hesperia subregional wastewater reclamation plants and related facilities will be well below thresholds with an even larger margin of safety.

- **Would the proposed project alter air movement, moisture, or temperature, or cause a change in climate, either locally or regionally?**

In response to the requirements of SB97, the state Resources Agency developed guidelines for the treatment of GHG emissions under CEQA in March, 2010. Section 15064.4 of the Code specifies how significance of GHG emissions is to be evaluated. Emissions identification may be quantitative, qualitative or based on performance standards. CEQA guidelines allow the lead agency to "select the model or methodology it considers most appropriate". The most common practice for infrastructure/combustion GHG emissions quantification is to use a computer model such as URBEMIS2007, as was used in the following analysis.

The California Air Resources Board (ARB) has developed an interim significance guideline for industrial projects or 7,000 metric tons of CO_2-equivalent annual emissions. Wastewater reclamation is not strictly an "industrial" process. However, in the absence of any adopted significance thresholds, VVWRA concludes that this is an appropriate screening level for use in the following analysis.

GHG Impact Analysis

GHG emissions would be potentially significant if the project would:

- Generate greenhouse gas emissions either directly or indirectly, that may have a significant impact on the environment.
- Conflict with an applicable plan, policy or regulation adopted for the purpose of reducing the emissions of greenhouse gases.

Construction Activity GHG Emissions

During project construction, the URBEMIS2007 computer model predicts that the indicated activities could generate the annual CO_2 emissions summarized in Table 4.2-23.

Table 4.2-23
ANNUAL CO_2 CONSTRUCTION EMISSIONS (tons/year)

Activity	Year	Short Tons CO_2 per Year	Metric Tons CO_2 per Year
Hesperia WRP	2011	440.4	400.4
Apple Valley WRP	2011	440.4	400.4
Hesperia Lift Station	2011	168.23	152.9
Apple Valley Lift Station	2011	254.97	231.8
Hesperia Pipeline	2011	567.02	515.5
Apple Valley Pipeline	2011	294.12	267.4
Hesperia Perc. Pond	2011	118.39	107.6
Apple Valley Perc. Pond	2011	118.39	107.6
2011 Total		**2,401.92**	**2183.6**
WRP Construction	2012	131.65	119.7
Apple Valley Lift Station	2012	128.11	116.5
2012 Total		**259.76**	**231.6**

Note: *Output provided in appendix

The screening level operational threshold is 7,000 metric tons (MT) of CO_2-equivalent (CO_2(e)) per year. As indicated in Table 4.2-23, construction activities are forecast to generate a total of 2,184 MT per year, which is well below the operational threshold. Further, this level would only be reached if all project components were to begin construction at the same time and occur in the same year.

Operational consumption of electricity will similarly create GHG emissions. Methane generated during decomposition of solid waste is also a GHG. Operational GHG emissions were calculated by combining energy consumption and/or methane production while their CO_2-equivalents are shown in the California Climate Action Registry CCAR (CCAR) reporting protocols (2009) as follows:

Electricity 10,800 KW/day x 724.12 lb/MW	=	8,689 lb/day
Methane 85 lb/day x 21 (global warming pot.)	=	1,795 lb/day
Total	=	10,484 lb/day
	=	1,913 short tons/year = 1,739 metric tons/year

The proposed project is substantially below the 7,000 metric ton per year GHG significance threshold which is acceptable to VVWRA. Nevertheless, the globally cumulative nature of GHG impacts and the ever-rising cost of energy require that any reasonably available control measures for energy conservation be implemented in the operation of the proposed wastewater treatment operations.

It is highly improbable that any measurable change in air movement, moisture, temperature, or climate change would occur as a direct result of future project implementation since none of the activities, construction or operation, is of a scale that could adversely impact these climate/weather parameters.

- **Would the proposed project creates objectionable odors affecting a substantial number of people or otherwise have a substantial, demonstrable negative aesthetic effect?**

During construction and operation, the proposed project would include vehicle operation with odors associated with exhaust emissions from the consumption of petroleum products (gasoline, diesel, etc.). During construction, odors associated with paving could also occur, but would be very short-term. None of these odors are normally considered so offensive as to cause sensitive receptors to complain. Both based on the short-term nature of some of these emissions and the characteristics of all of these emissions, no significant short-term odor impacts are forecast to result from implementing the proposed project.

Wastewater treatment plants have potential odor issues. Odor emissions derive primarily from sewage solids handling and processing. The headworks, the digesters, and the sludge dewatering components handle sewage solids capable of creating strong odors from biological decay of organic materials under anaerobic conditions. Odor strength is generally measured by the number of dilutions with fresh air required to reduce the odor to a level where fifty percent of a given population can no longer detect the odor. The odor strength is called the number of “odor units”, or OU, or dilution to threshold, or “D/T” of the sample.

Within the wastewater processing system, the measured D/T level of various compounds of a wastewater treatment process is as summarized in Table 4.2-24.

Table 4.2-24
D/T LEVELS FOR WASTEWATER TREATMENT PROCESSES

Source	D/T
Inlet Trunklines	2,000-4,000
Headworks	2,000-2,500
Primary Treatment	400-500
Dewatering	400-1,000

The measurements identified above are based upon measurements taken within confined spaces at each source location. The D/T levels are rapidly diluted by atmospheric air, or the air above the sources is treated by odor control units.

With properly operating odor control units, the air in the immediate vicinity or various treatment processes typically has 5-10 O.U. and has a “wet earth” odor character. Within 500 feet, additional atmospheric dilution reduces the odor to below the detection threshold of even the most odor-sensitive persons. Both the two proposed Hesperia WRP locations and the Apple Valley site have at least a 500-foot buffer zone to the closest off-site residence. Therefore, the odors produced by the treatment processes being conducted at the proposed WRP facilities is not forecast to affect sensitive receptors located within the vicinity of the proposed facilities.

Further, the proposed treatment facilities will return the solids to the sewer for transport to the Westside WRP and the onsite units will be enclosed where the odors can be captured and treated prior to discharge to the atmosphere. Thus, the potential odor effects of operating both Subregional WRPs are not forecast to rise to a level of significant adverse impact for the nearest sensitive receptors.

- **Would the proposed project result in population increases within the regional statistical area which would be in excess of that projected in the AQMP and in other than planned locations for the project’s build-out year?**

The Initial Study found that the proposed Town of Apple Valley and City of Hesperia subregional wastewater reclamation plants and related facilities implementation would have a less than significant impact with respect to causing or contributing to population increases, either directly or indirectly. The Initial Study also found that little or no displacement of housing, which might necessitate an increase in housing in another location would be expected to occur as a result of the Project. A full discussion of this topic can be found in Section XII, Population and Housing, of the Initial Study. Further, growth inducement is given additional consideration in Subchapter 4.5 of this document based on comments received. Because the potential for the project to result in population growth or displacement has already been addressed and found to be less than significant, no significant adverse impact is projected with respect to the Air Quality Management Plan. No further analysis is warranted with respect to induced population and the Air Quality Management Plan. No mitigation is required under this item.

4.2.4 Mitigation Measures

The Air Quality Impact Analysis identifies a limited range of mitigation measure for mandatory implementation to reduce potential air quality impacts of constructing and operating the Apple Valley and Hesperia Subregional WRP facilities. This list is expanded below to include a full range of measures that can be implemented to minimize air pollutant emissions, primarily during construction. It will be necessary to implement the mandatory measures for all project facilities. Those measures that are identified as "optional" should be considered for implementation on a case-by-case basis as individual construction contracts are awarded by VVWRA. The list of available mitigation measures follows.

4.2-1 ***Water active grading sites and haul roads at least three times daily and when dust is observed migrating from the site. (Mandatory)***

4.2-2 ***Pave or apply water three times daily, or apply non-toxic soil stabilizers on all unpaved access roads, parking areas, and staging areas. More frequent watering will occur if dust is observed migrating from the site during grading activities. (Mandatory)***

4.2-3 ***Enclose, cover, or water twice daily, or apply non-toxic soil binders, to any onsite stockpiles of debris, dirt or other dusty material. (Mandatory)***

4.2-4 ***Suspend all grading and excavation operations when wind speeds exceed 25 mph. (Mandatory)***

4.2-5 ***Replace ground cover or pave disturbed areas immediately after construction is completed in the affected area. (Mandatory)***

4.2-6 ***Hydro-seed, apply non-toxic chemical soil stabilizers or otherwise stabilize any cleared area which is to remain inactive for more than 10 days after clearing is completed. (Mandatory)***

4.2-7 ***Cover all trucks hauling soil, sand and other loose materials on local paved roadways. (Mandatory)***

4.2-8 ***Sweep or wash any site access points daily of any visible dirt deposition on any public roadway. (Mandatory)***

4.2-9 ***Reduce and control traffic speeds on unpaved roads to less than 15 mph. (Mandatory)***

4.2-10 ***Install sandbags or other erosion control measures to prevent silt runoff to public paved roadways. (Mandatory)***

4.2-11 ***To the extent feasible, limit the area subject to excavation, grading and other construction activity at any one time. (Optional)***

4.2-12 ***All equipment shall be properly tuned and maintained in accordance with manufacturer's specifications to minimize nitrogen oxide emissions. (Mandatory)***

4.2-13 ***General contractors shall maintain and operate construction equipment so as to minimize exhaust emissions. (Mandatory)***

4.2-14 ***Require 90-day low NOx tune-ups for off road equipment. (Mandatory)***

4.2-15 ***Use Tier3-rated engines during site grading for all equipment exceeding 100 horsepower, if available. (Optional)***

4.2-16 ***During construction, trucks and vehicles in loading and unloading queues would be kept with their engines off, when not in use, to reduce exhaust emissions. (Mandatory)***

4.2-17 ***Limit allowable idling to 5 minutes for trucks and heavy equipment. (Mandatory)***

4.2-18 ***Encourage car pooling for construction workers. (Optional)***

4.2-19 ***Limit lane closures to off-peak travel periods, when possible. (Optional)***

4.2-20 ***Park construction vehicles off traveled roadways, when possible). (Optional)***

4.2-21 ***Encourage receipt of materials during non-peak traffic hours. (Optional)***

4.2-22 ***VVWRA shall establish a monitoring program to track Hesperia and Apple Valley Subregional facility operational electricity consumption. As part of this monitoring program, those non-GHG emitting electrical generation projects implemented by VVWRA shall be quantified to demonstrate the specific reductions in both criteria pollutants and GHG relative that which would occur from relying on electricity delivered by the Southern California Edison (SCE) grid. To the extent feasible and consistent with each agency's ability, an objective of offsetting criteria pollutant and GHG electricity consumption emissions by 50%, relative to reliance on the SCE grid, will be established. (Optional)***

4.2-23 ***To the extent feasible, the VVWRA shall select landscaping that is fast-growing to create visual buffers at future Apple Valley and Hesperia Subregional facility sites to offset GHG emissions. Where landscaping is feasible, a landscape plan designed to initiate carbon sequestration and these plants shall be periodically harvested and/or replanted to maintain carbon sequestration. Alternatively, these agencies may choose to purchase annual or permanent carbon credits from the available carbon banks at the time that a facility begins operation. (Optional)***

4.2-24 ***To the extent feasible, VVWRA shall select electrical equipment for future Apple Valley and Hesperia Subregional project that minimize electricity consumption. VVWRA shall confer with SCE and electrical equipment manufacturers to implement this measure. Documentation of such efforts shall be retained in project files to verify that electricity consumption of such equipment has been given consideration before selecting a specific piece of equipment, such as a booster pump. This measure is not intended to dictate selection of equipment that minimizes electricity consumption, only to ensure that this criterion is clearly given consideration in the selection of such equipment. Where electricity savings are achieved they shall be documented. (Optional)***

Implementation of the above measures will ensure that individual air pollutant emissions from Subregional construction activities can be controlled to a less than significant impact level. As described above, combined construction activities have a potential to exceed the MDAQMD NOx emission threshold, but the above mandatory measures can reduce potential NOx emissions to the lowest achievable level. Even though operational emissions for the combined Subregionals are less than significant, including GHG emissions, the optional measures can also reduce long-term criteria and GHG emissions relative to the levels forecast for these facilities.

4.2.5 Cumulative Impacts

A portion of the air pollution in the MDAQMD is directly caused by human activities in the MDAB, and a substantial portion of the pollution is transported into the basin from upwind sources within the South Coast Air Basin. The human activities within the MDAB that generate air pollutant emissions include motor vehicle use, industrial emissions, and fugitive dust from disturbing native soil cover or other soil. The proposed project is located within an air basin with poor air quality for ozone and particulates. However, the proposed project does not propose any uses, or intensity of uses, that are not already authorized and anticipated under the existing AQMP and local and regional growth management plans.

Mitigation measures have been identified to minimize future emissions during construction and operation of the Town of Apple Valley and City of Hesperia subregional wastewater reclamation plants and related facilities project components. Mitigation has also been identified to reduce electricity consumption to the extent feasible when operating complex wastewater treatment systems. Regardless, a potential exists for the Town of Apple Valley and City of Hesperia subregional wastewater reclamation plants and related facilities construction activities and equipment electricity consumption to generate cumulatively considerable criteria pollutant emissions within the MDAB. This finding results in a potential cumulatively significant unavoidable adverse impact for future implementation of the Project when compared to the MDAQMD construction and operational emission thresholds of significance.

4.2.6 Unavoidable and Adverse Impacts

With mitigation measures, the individual construction projects, such as pipelines, percolation ponds, lift stations, etc.) are not forecast to result in significant adverse impacts on air quality. Short-term impacts of construction are unavoidable but with mitigation, and due to their short duration, would not be considered significant. Long-term impacts of the project, as previously analyzed, would not be considered significant with implementation of mitigation. The emission forecasts in the analysis above indicate that, on a case-by-case basis or specific project basis, air quality impacts would not be considered an unavoidable and significant impact.

However, as summarized above, the potential exists for the proposed Town of Apple Valley and City of Hesperia Subregional WRPs and related facility construction activities to generate cumulative considerable criteria pollutant emissions within the MDAB if constructed simultaneously. This finding results in a potential cumulatively significant unavoidable adverse impact for future implementation of the Project when compared to the MDAQMD construction and operational emission thresholds of significance. Thus, should the VVWRA Board determine to proceed with construction of both facilities concurrently in the future, a potentially significant, short-term air quality impact will occur and the Board will have to consider adoption of a Statement of Overriding Considerations to approve implementation of these two facilities.

4.3 BIOLOGICAL RESOURCES / LAND USE & PLANNING

4.3.1 Introduction

Information presented in this subchapter is taken from the City and County General Plans and supporting documents, the California Natural Diversity Database (CNDDB) for the project area and species specific documents from state and federal agencies.

Both the California and Federal endangered species acts provide legislation to protect the habitats of listed species as well as the species itself. If a state or federally listed endangered species were determined to be present within the project area, the proposed project may be constrained to avoid, minimize or offset (compensate for) effects to the species. Species specific mitigation measures would need to be agreed upon and implemented to the satisfaction of all jurisdictional agencies. These jurisdictional agencies may include some or all of the following: U.S. Fish and Wildlife Service (USFWS), California Department of Fish and Game (CDFG), the Regional Water Quality Control Board (RWQCB), and/or U.S. Army Corps of Engineers (ACOE).

Four scoping meetings were held for this proposed project. The first set of meetings were held in the Town of Apple Valley on June 15 and 17, 2010. The second set of meetings were held in the City of Hesperia on June 22 and 24, 2010. Substantive comments were received at the June 15, 2010 scoping meeting that focused on hydrology topics, but no comments were received on biological resource impacts.

Several comments on general biology issues were submitted in response to the Notice of Preparation. The State Water Resources Control Board identified unique biology information requirements for participation in the State Revolving Fund program. Both the Lahontan Regional Water Quality Control Board and the Apple Valley Ranchos Water Company identified concerns regarding reductions in discharge of wastewater into the Mojave River transition zone, downstream of the Westside Water Reclamation Plant. Information is provided in this section to address the general concerns expressed regarding species and floodplain impacts. Refer to the summary list of comments in Chapter 2 and also to copies of the comment letters themselves in Appendix 8.2 of this Volume of the Draft EIR. Although the CDFG received the Notice of Preparation, the CDFG did not submit a comment letter on the project.

One of the issues identified in the Land Use/Planning category asks if the proposed project would: "Conflict with any applicable habitat conservation plan or natural community conservation plan?" Although this issue was identified in the Initial Study as having no impact, because it so closely related to the biology resources evaluation contained in this subchapter, the Land Use & Planning issue quoted above has been integrated into this subchapter, and it will be evaluated in the analysis presented below.

4.3.2 Environmental Setting

TDA was contracted by the VVWRA to perform general biological surveys and habitat suitability evaluations for Mohave ground squirrel *(Spermophilus mohavensis),* desert tortoise *(Gopherus agassizii),* and western burrowing owl *(Athene cunicularia)* for the proposed WRPs project. TDA Biologist, Shay Lawrey conducted general assessment pedestrian surveys in the project

area on March 5, April 7, May 10, 20, June 1, 15 and July 9, 2010 by walking the site and noting habitat types, disturbance levels and animal species. Pedestrian surveys were conducted with the intention of observing all habitat types. Pipeline alignments were driven and the adjacent areas walked. Pedestrian surveys provided 100 percent coverage each proposed facility location. Wildlife species as detected during field surveys by sight, calls, tracks, scat, or other sign were recorded. In addition to species actually observed, expected wildlife usage of the site was determined according to known habitat preferences of regional wildlife species and knowledge of their relative distributions in the area. The faunal species surveys focused on a number of primary objectives: (1) recording of dominant vegetation communities; (2) identify potential suitable habitat for special status wildlife within the Project area; and (3) identify protected resources such as streams and drainages. The habitat evaluation for Mohave ground squirrel focused on occurrences of the species in the region, and CDFG's criteria for assessing potential impacts to Mohave ground squirrel: (1) Is the site within the range of the species? (2) Is there native habitat with a relatively diverse shrub component? (3) Is the site surrounded by development and therefore isolated from potentially occupied habitat?

The field surveys were conducted within an appropriate spring-summer survey window when most species are readily detectable. It is acknowledged that some wildlife species with a nocturnal pattern of activity or otherwise difficult to detect may have not been identified by the survey. No protocol-level nocturnal, trapping, or focused surveys for special-status were conducted as part of this project. During the general biological and habitat suitability surveys special attention was paid to detecting evidence of desert tortoise and burrowing owl activity.

In addition to the Town of Apple Valley and City of Hesperia wastewater reclamation plants, TDA also evaluated the Eastside Regional WRP site. Although no specific facilities are proposed for this WRP site at this time, TDA conducted a general biological evaluation and habitat suitability assessment for this site. The purpose of this report is to review the proposed project in sufficient detail to determine to what extent any sensitive species or species currently listed or formally proposed for listing as endangered or threatened under the federal Endangered Species Act (Act) or California Endangered Species Act (CESA) may be affected by the proposed project. This document presents information upon which decisions regarding project-related impacts can be reached and it is consistent with the San Bernardino County 2006 guidelines on biological report requirements. A copy of the General Biological Resources Assessment is provided in Volume 2, Technical Appendices, of the EIR for those interested in the more detailed evaluation of these resources. Portions of the text from this Assessment are incorporated in the following findings and analysis.

The Apple Valley-Hesperia area lies in the heart of the Victor Valley, on the southern rim of the Mojave Desert, to the north of the San Bernardino-San Gabriel mountain ranges. The soils in the project area consist of Cajon sand, Cajon-Wasco cool complex, Bryman loamy fine sand, Haplargids-calciorthids, Lucerne sandy loam, Riverwash, Victorville sandy loam, and Villa loamy sand. Soils are light yellowish brown, medium-grained alluvial sands in the Hesperia area, and are slightly darker brown in the Apple Valley area. The local climatic conditions in the project area are characterized by hot summers, mild winters, infrequent rainfall, and dry humidity. The average annual temperature is 62°F, with averages ranging between 35-97°F. The rainy season begins in November and continues through March, with the quantity and frequency of rain varying from year to year. The average annual rainfall is approximately 3.4 inches with a range of 1.1 to 11.2 inches. The rivers and streams in the high desert are dry most of the year

and surface water is available only at springs and where localized geology causes rising or groundwater to surface and flow aboveground. Surrounding land uses include vacant land, open space, residential development, recreational parks, and major arterial roads.

The primary vegetation communities within the overall project study area can be characterized as disturbed/degraded creosote bush scrub, alkali desert scrub, Joshua tree forest, disturbed ruderal weeds, and dry desert wash. The desert scrub community consists of low growing perennial plants with a few taller shrubs. Joshua tree forest is a mixed woodland community occurring between areas of desert scrub and higher elevation pinyon-juniper woodlands. Within the matrix of desert scrub, and Joshua tree forest, there are a number of plant and animal communities of limited distribution. Desert wash communities occur in the ephemeral, generally dry washes, that drain to the Mojave River from local uplands. These washes may contain a variety of vegetative communities, which are generally more robust and diverse than the desert scrub communities. Periodic flow enhances large shrub growth and results in a variability in the plant community in the washes. Along the road edges, interspersed within the Mojave creosote bush scrub are patches of bare ground, disturbed ground near the houses, and sparse habitat patches dominated by non-native species. There are high levels of on-going disturbance in the project study area. There are residential structures and off-road-vehicle (ORV) use, dogs, and trash dumping.

The two main recreational activities in the project area are ORV use and casual hiking. Throughout the project area, ORV use is moderate to heavy. There has been the creation of social trails that appear to be quite active, most notably in the proposed Eastside WRP site. With the nearby communities in the Victor Valley experiencing high levels of growth, increases in OHV use have already been noticed, and are expected to increase. The social trails have impacted parts of the project area by creating continuous disturbance that does not allow the impacted vegetation to recover to later seral stages. In addition, the ORV's themselves are a source of increased wildland fire ignitions and vectors that ultimately support invasive weeds, and field surveys found that these social trails are one of the primary areas where the weeds are observed in the greatest abundance.

The proposed site of the Apple Valley WRP and the adjacent lift station are located within the Lenny Brewster Sports Center at 21024 Otoe Road, a public park, and the pipeline alignments lie mostly in the existing rights-of-way of Dale Evans Parkway, Navajo Road, Waalew Road, and Otoe Road, including a short segment of the latter that remains unpaved. Of the two alternative locations for the percolation basin, one is situated on a vacant parcel on the east side of Waalew Road, between two single-family residences, and the other is within southern boundary the Apple Valley Airport, on land that appears to have been used as agricultural fields in the past.

The City of Hesperia has proposed two alternative locations for its WRP. Alternative A is located west of Interstate 15 (I-15). The specific proposed location of the WRP is located north of Main Street, south of Yucca Terrace Drive, and west of Catawba Road, along a westward extension of Acacia Road. The lift station proposed to serve both WRP alternatives occupies the same location. A sewer main presently follows the alignment of Maple Avenue. The proposed lift station site is located just west of Maple on the south side of Mojave Street, west of Tamarisk. A short gravity flow sewer would connect the existing sewer main in Maple to the lift station site on Mojave.

The City of Hesperia WRP B site (preferred alternative reclamation plant site) is proposed to be located on the north side of Mojave Street, just west of Tamarisk Avenue approximately one half mile west of Maple Avenue in the City of Hesperia.

The ground surfaces at both alterative WRP sites and both alternative lift stations sites in Hesperia have all been heavily disturbed. The WRP site on Mojave Street is enclosed by a chain-link fence and has been used for dumping trash, including broken pieces of paving materials such as asphalt and concrete. The lift station site located south of Mojave Street appears to have been graded into a pad in the past, although it is now overgrown with ruderal vegetation, while the one north of Mojave Street is currently used as a paved parking lot. The ground surface at the percolation pond site has been slightly disturbed in the northern and eastern portions, but is otherwise mostly in a native state. With a few exceptions, the proposed pipeline alignments lie within the highly disturbed rights-of-way of various existing paved roads.

As noted above, a gravity sewer will connect the existing sewer main in Maple Avenue, at the intersection of Maple and Mojave, to the lift station. In order to connect the lift station to the proposed WRP B Alternative site a short segment of force main will be installed in Mojave Street over a distance of about 1,500 feet. In addition, the project would include a force main between the WRP and a manhole located at the intersection of Maple Avenue and Mauna Loa Street to return to the collection system the waste activated sludge generated by the treatment process.

The final component of the Hesperia WRP facilities is a recycled water force main that would deliver recycled water from the WRP alternative sites to the percolation basin. The force main would extend as follows: from the WRP east along Mojave Street to Tamarisk Avenue; south along Tamarisk to Willow Street; east along Willow to 3rd Avenue; east along Mesa Street to Santa Fe Avenue; and finally, northeast along Santa Fe Avenue to the proposed percolation basin site which is located at the northwest corner of the intersection of Manzanita Street and I Avenue and Manzanita Street and Osbrink Drive. To connect to the WRP-A the force main would extend west from the intersection of Tamarisk and Willow along the Live Oak Street alignment to Amargosa Road; then west along Amargosa to Cataba Road; and finally, north along Cataba to Acacia where the force main will turn west into the WRP A site. It is possible that onsite percolation basins may be installed at the WRP A site. No layout of basins has been identified for this site, but the site specific investigations evaluated an area sufficient to include such basins.

The Eastside WRP site encompasses an approximate 50-acre area located between the Mojave River on the west, I-15 on the south, Stoddard Wells Road on the east and north, Dante Street on the north and the Mojave Northern Railroad track alignment on the northwest. This site in Victorville is located on the eastern bank of the Mojave River, in an area that is occupied by a mixture of native and non-native vegetation on an alluvial-fan that runs the length of the property. A handful of buildings stand along a few roads or driveways on or adjacent to the property.

4.3.2.1 Town of Apple Valley Project Site

Habitat

The plant communities within and adjacent to the Apple Valley project site study area can be characterized as a blend of landscaped, bare ground, disturbed/degraded creosote bush scrub and disturbed ruderal weeds. Vegetation within this project area is typical of many locations in the southwestern Mojave Desert, with elements of both desert and foothill vegetation. Perennial plants include creosote bush (*Larrea tridentada*), California buckwheat *(Eriogonum fasciculatum),* and desert needlegrass *(Achnatherum speciosum).* Annual plants detectable at the time of surveys included sticky Mojave sun-cups *(Camissonia campestris),* little gold-poppy *(Eschscholzia minutiflora),* purple desert lupine *(Lupinus schockleyi),* and desert dandelion *(Malacothrix glabrata)*. Other annuals observed were exotic, invasive species, such as split grass *(Schismus* sp.), shortpod mustard *(Hirschfeldia incana),* tumble mustard *(Sisymbrium altissimum)*, sisymbrium *(S. orientale),* hare barley *(Hordeum murinum),* red brome *(Bromus madritensis* ssp. *rubens),* and cheat grass *(B. tectorum),* or native plants adapted to disturbance, such as red-stemmed filaree *(Erodium cicutarium),* and fiddleneck *(Amsinckia tessellata).*

Fauna

Side-blotched lizard *(Uta stansburiana),* western whiptail *(Cnemidophorus tigris),* and desert spiny lizard *(Sceloporus magister)* were the only reptiles observed. Other locally common reptile species that may occur include zebra-tailed lizard *(Callisaurus draconoides),* desert homed lizard *(Phrynosoma platyrhinos),* red racer *(Masticophis flagellum),* glossy snake *(Arizona elegans),* gopher snake *(Pituophis melanoleucus),* and various rattlesnake species *(Crotalus* ssp.).

Common, resident bird species observed that may nest on-site or in adjacent areas included California quail *(Callipepla californica),* California towhee *(Pipilo crissalis),* mourning dove *(Zenaida macroura),* homed lark *(Eremophila alpestris),* verdin *(Auriparus flavipes),* black-throated sparrow *(Amphispiza bilineata),* and sage sparrow *(Amphispiza belli).* Raptors included red-tailed hawk *(Buteo jamaicensis).* Species typically associated with urbanizing areas were common and included rock dove *(Columba livia),* common raven *(Corvus corax),* northern mockingbird *(Mimus polyglottos),* house finch *(Carpodacus mexicanus),* and house sparrow *(Passer domesticus).*

All detected mammals are common to the region. Small burrowing mammals included California ground squirrel *(Otospermophilus beecheyi),* Botta pocket gopher *(Thomomys bottae),* kangaroo rat *(Dipodomys sp),* and desert wood rat *(Neotoma lepida).* Medium-sized mammals included black-tailed hare *(Lepus californicus)* and Audubon cottontail *(Sylvilagus audubonii).* Coyote *(Canis latrans)* was the only predator detected.

Special Status Species

Figure 4.3-1 depicts sensitive species occurrences near the project. Based on observations made in the field during the surveys, marginally suitable habitat exists in the adjacent areas to the project area but not within the project footprint for the following species:

1) Burrowing owl – moderate potential of occurrence due to suitable habitat, and presence of friable soils, ground squirrel burrows and an ample food source.

2) pallid San Diego pocket mouse– moderate potential of occurrence due to suitable habitat, and presence of friable soils, small mammal burrows and an ample food source
3) desert tortoise – low potential of occurrence due to the presence of marginally suitable habitat, friable soils, ground squirrel burrows and food source.
4) coast horned lizard – moderate potential of occurrence due to suitable habitat, and presence of friable soils and an ample food source (red ants).

No evidence of these species was found during field surveys.

4.3.2.2 Hesperia Project Site

Habitat

The plant communities within the Hesperia project site study area can be characterized as a blend of disturbed/degraded alkali desert scrub, creosote bush scrub, Joshua tree forest, disturbed ruderal weeds, and dry desert wash. Perennial plants included Joshua tree, creosote bush (*L. tridentada*), allscale (*Atriplex polycarpa*), cheese bush (*Hymenoclea salsola*), winterfat (*Krascheninnikovia lanata*), linear-leaf goldenbush *(Ericameria linearifolius),* rubber rabbitbrush *(C. nauseosus),* Anderson's box-thorn *(Lycium andersonii),* peachthorn *(L. cooperii),* California buckwheat *(E. fasciculatum),* spiny hopsage *(Grayia spinosa),* and desert needlegrass *(A. speciosum).* Annual plants included many native wildflower species, such as sticky nama *(P. membranaceum),* Mojave sun-cups *(C. campestris),* little gold-poppy *(E. minutiflora),* purple desert lupine *(L. schockleyi),* Golden linanthus *(L. aureus),* sand blossoms *(Linanthus parryae),* California coreopsis *(Coreopsis californica),* Pringle's woolly daisy *(Eriophyllum pringlei),* common tidy tips *(Layia platyglossa),* and desert dandelion *(M. glabrata)*. Other annuals observed were exotic, invasive species, such as split grass *(Schismus* sp.), Saharan mustard *(Brassica tournefortii),* shortpod mustard *(H. incana),* tumble mustard *(S. altissimum)*, London rocket (S. *irio)* , sisymbrium *(S. orientale),* hare barley *(H.murinum),* red brome *(B. madritensis* ssp. *rubens),* and cheat grass *(B. tectorum),* or native plants adapted to disturbance, such as red-stemmed filaree *(E. cicutarium),* Lemmon's lessingia *(Lessingia lemmonii),* and fiddleneck *(A. tessellata).*

Fauna

Side-blotched lizard *(Uta stansburiana),* western whiptail *(Cnemidophorus tigris),* and desert spiny lizard *(Sceloporus magister)* were the only reptiles observed. Other locally common reptile species that may occur include zebra-tailed lizard *(Callisaurus draconoides),* long-nosed leopard lizard *(Gambelia wislizenii),* desert homed lizard *(Phrynosoma platyrhinos),* red racer *(Masticophis flagellum),* glossy snake *(Arizona elegans),* gopher snake *(Pituophis melano-leucus),* long-nosed snake *(Rhinocheilus lecontei),* and various rattlesnake species *(Crotalus* ssp.).

Common, resident bird species observed that may nest on-site or in adjacent areas included California quail *(Callipepla californica),* California towhee *(Pipilo crissalis),* California thrasher *(Toxostoma redivivum),* mourning dove *(Zenaida macroura),* homed lark *(Eremophila alpestris),* verdin *(Auriparus flavipes),* black-throated sparrow *(Amphispiza bilineata),* and sage sparrow *(Amphispiza belli).* Raptors included red-tailed hawk *(Buteo jamaicensis)* and great horned owl *(Bubo virginianus).* Species typically associated with urbanizing areas were common and included rock dove *(Columba livia),* common raven *(Corvus corax),* northern mockingbird

(Mimus polyglottos), house finch *(Carpodacus mexicanus),* and house sparrow *(Passer domesticus).*

All detected mammals are common to the region. Small burrowing mammals included California ground squirrel *(Otospermophilus beecheyi),* Botta pocket gopher *(Thomomys bottae),* kangaroo rat *(Dipodomys sp),* and desert wood rat *(Neotoma lepida).* Medium-sized mammals included black-tailed hare *(Lepus californicus)* and Audubon cottontail *(Sylvilagus audubonii).* Coyote *(Canis latrans)* was the only predator detected.

Special Status Species

Figure 4.3-2 depicts sensitive species occurrences near the project. Based on observations made in the field during the surveys suitable to marginally suitable habitat exists on site and adjacent to the site for the following species:

1) Burrowing owl – moderate potential of occurrence due to suitable habitat, and presence of friable soils, ground squirrel burrows and an ample food source. Documented in the vicinity of the site.
2) pallid San Diego pocket mouse– moderate potential of occurrence due to suitable habitat, and presence of friable soils, small mammal burrows and an ample food source
3) desert tortoise – low potential of occurrence due to the presence of marginally suitable habitat, friable soils, ground squirrel burrows and food source. Documented within five miles of the site.
4) coast horned lizard – moderate potential of occurrence due to suitable habitat, and presence of friable soils and an ample food source (red ants).
5) Mohave ground squirrel – low potential of occurrence due to marginally suitable habitat, and presence of friable soils. Site lacks an ample food source. Documented within five miles of the site.
6) Le Conte's thrasher– moderate potential of occurrence due to suitable habitat for foraging and potentially nesting. Documented within five miles of the site.
7) Booth's evening-primrose – low potential of occurrence marginally suitable habitat. Documented within ten miles of the site.
8) white pygmy-poppy – low potential of occurrence marginally suitable habitat. Documented within five miles of the site.
9) short-joint beavertail – low potential of occurrence marginally suitable habitat. Documented within five miles of the site.

No evidence of the species listed above was found during survey.

4.3.2.3 Potential Eastside Site

Habitat

The plant communities within the project area can be characterized as a blend of disturbed/degraded alkali desert scrub, creosote bush scrub, and disturbed ruderal weeds. Perennial plants included creosote bush (*L. tridentada*), allscale (*A. polycarpa*), cheese bush (*H. salsola*), rubber rabbitbrush *(C. nauseosus),* Anderson's box-thorn *(L. andersonii),* peachthorn *(L. cooperii),* California buckwheat *(E. fasciculatum),* spiny hopsage *(G. spinosa),* and desert needlegrass *(A. speciosum).* Annual plants included sticky nama *(P. membranaceum),* Mojave

sun-cups *(C. campestris),* little gold-poppy *(E. minutiflora),* purple desert lupine *(L. schockleyi),* Golden linanthus *(L. aureus),* sand blossoms *(L. parryae),* California coreopsis *(C. californica),* Pringle's woolly daisy *(E. pringlei),* and desert dandelion *(M. glabrata)*. Other annuals observed were exotic, invasive species, such as split grass *(Schismus* sp.), shortpod mustard *(H. incana),* sisymbrium *(S. orientale),* hare barley *(H. murinum),* red brome *(Bromus madritensis* ssp. *rubens),* cheat grass *(B. tectorum),* red-stemmed filaree *(E. cicutarium),* Lemmon's lessingia *(L. lemmonii),* and fiddleneck *(A. tessellata).*

Located just west-southwest of the Eastside study area is the Mojave River, which is the largest drainage system in the Mojave Desert. The River's source is in the San Bernardino Mountains, above Hesperia. The West Fork of the Mojave flows into Silverwood Lake, formed by Cedar Springs Dam, which discharges in the Mojave River Forks Reserve area. Downstream, Deep Creek meets the West Fork, forming the Mojave River, immediately upstream of the Mojave River Dam. Downstream of the dam, the Mojave River flows north and east, underground in most places, through Hesperia, Victorville, and Barstow and terminates at Soda/Silver Dry Lake near Baker, California. In this reach of the Mojave River a fresh water marsh occurs, surrounded by dense, tall, multi-canopy riparian habitat. The riparian habitat within the project area is in various seral stages and generally consists of tall, multilayered, open, canopy riparian forests. The dominant vegetative species within this riparian forest include Eucalyptus, Freemont cottonwood (*Populus fremontii),* black cottonwood, (*P. tremuloides*) and several tree willows (*Salix* spp). Characteristic species, in addition to the eucalyptus and cottonwood, include black willow (*S. goodingii*) narrow-leved willow (*S. exigua*), arroyo willow (*S. lasiolepis*), red willow (*S. laevigata*), sandbar willow (*S. hindsiana*), mulefat (*Baccharis salicifolia*) Sycamore (*Platanus recemosa)* and elderberry *(Sambucus mexicana).* In addition to fresh water marsh and riparian habitat, alkali desert scrub, creosote bush scrub, and grassland habitats occur adjacent to the river to the north-northeast.

Fauna

Western skink *(Eumeces skiltonianus, s*ide-blotched lizard *(Uta stansburiana),* western whiptail *(Cnemidophorus tigris),* and desert spiny lizard *(Sceloporus magister)* were the only reptiles observed. Other locally common reptile species that may occur include zebra-tailed lizard *(Callisaurus draconoides),* long-nosed leopard lizard *(Gambelia wislizenii),* desert homed lizard *(Phrynosoma platyrhinos),* red racer *(Masticophis flagellum),* glossy snake *(Arizona elegans),* gopher snake *(Pituophis melanoleucus),* long-nosed snake *(Rhinocheilus lecontei),* and various rattlesnake species *(Crotalus* ssp.).

Several bird species were noted in this study area such as the California quail *(Callipepla californica),* California towhee *(Pipilo crissalis),* California thrasher *(Toxostoma redivivum),* mourning dove *(Zenaida macroura),* sage sparrow *(Amphispiza belli),* red-tailed hawk *(Buteo jamaicensis,* white-tailed kite *(Elanus leucurus)*, Cooper's hawk (*A. cooperii*), golden eagle *(Aquila chrysaetos),* great horned owl *(Bubo virginianus),* rock dove *(Columba livia),* common raven *(Corvus corax),* northern mockingbird *(Mimus polyglottos),* house finch *(Carpodacus mexicanus),* and house sparrow *(Passer domesticus).*

In the riparian habitat south of the proposed Eastside site seral bird species were readily observed such as the great blue heron *(Ardea herodias),* blackcrowned night-heron *(Nycticorax nycticorax),* tree swallow *(Tachycinera bicolor),* red-winged blackbird *(Agelaius phoeniceus),* marsh wren *(Cistothorus palustris),* piedbilled grebe *(Podilymbus podiceps),* ruddy duck *(Oxyura*

jamaicensis), American coot *(Fulica americana),* mallard *(Anas platyrhynchos),* killdeer *(Charadrius voci/erus),* common yellowthroat, and song sparrow.

Species that nest in the riparian stands include the Anna's hummingbird *(Calypte anna),* northern flicker *(Colaples auratus),* Cassin's kingbird *(Tyrannus vociferans),* American crow, European starling, Bullock's oriole *(Icterus bullockir),* and house finch. Nests of the red-tailed hawk *(Buteo jamaicensis)* and red-shouldered hawk are regularly found in the riparian as well, probably because they are often the tallest trees available. Oriole and kingbird nests are locally concentrated in riparian. The commonly encountered winter visitors in the riparian forests are the ruby-crowned kinglet *(Regulus calendula),*white-crowned sparrow *(Zonotrichia leucophrys),* American pipit *(Anthus rubescens)* and savannah sparrow *(Passerculus sandwichensis)*.

All detected mammals are common to the region. Small burrowing mammals included California ground squirrel *(Otospermophilus beecheyi),* Botta pocket gopher *(Thomomys bottae),* kangaroo rat *(Dipodomys sp),* and desert wood rat *(Neotoma lepida).* Medium-sized mammals included black-tailed hare *(Lepus californicus),* Audubon cottontail *(Sylvilagus audubonii),* Coyote (*Canis latrans*), raccoon (*Procyon lotor*), and striped skunk (*Mephitis mephitis*).

<u>Special Status Species</u>
Figure 4.3-3 depicts sensitive species occurrences near the parcel. Based on observations made in the field during the surveys suitable to marginally suitable habitat exists on site for the following species:

1) Burrowing owl – moderate potential of occurrence due to suitable habitat, and presence of friable soils, ground squirrel burrows and an ample food source. Documented within 5 miles of the site.
2) pallid San Diego pocket mouse– moderate potential of occurrence due to suitable habitat, and presence of friable soils, small mammal burrows and an ample food source
3) desert tortoise – low potential of occurrence due to the presence of marginally suitable habitat, friable soils, ground squirrel burrows and food source. Documented within 5 miles of the site.
4) coast horned lizard – moderate potential of occurrence due to suitable habitat, and presence of friable soils and an ample food source (red ants).
5) Mohave ground squirrel – low potential of occurrence due to marginally suitable habitat, and presence of friable soils. Site lacks an ample food source.
6) Le Conte's thrasher– moderate potential of occurrence due to suitable habitat for foraging and potentially nesting. Documented within 5 miles of the site.
7) white pygmy-poppy – low potential of occurrence marginally suitable habitat. Documented within 5 miles of the site.

Outside and to the west-southwest of the project site suitable habitat exists for the following species:

1) Cooper’s hawk- observed
2) yellow warbler-observed
3) southwestern willow flycatcher-documented
4) yellow breasted chat-observed

5) Mohave river vole-documented
6) least Bell's vireo-observed and documented

4.3.3 Regulatory Aspects

4.3.3.1 Federal Endangered Species Act

The USFWS administers the federal Endangered Species Act (ESA) of 1973. The ESA provides a legal mechanism for listing species as either threatened or endangered, and a process of protection for those species listed. Section 9 of the ESA prohibits "take" of threatened or endangered species. The term "take" means to harass, harm, pursue, hunt, shoot, wound, kill, trap, capture, or collect, or to attempt to engage in such conduct. "Take" can include adverse modification of habitats used by a threatened or endangered species during any portion of its life history. Under the regulations of the ESA, the USFWS may authorize "take" when it is incidental to, but not the purpose of, an otherwise lawful act. Take authorization can be obtained under Section 7 or Section 10 of the ESA.

This project will not result in, and there is no risk of, take of a federally listed species.

The ESA requires Federal agencies to insure that activities they authorize, fund, or carry out are not likely to jeopardize the continued existence of any listed species, or destroy or adversely modify its critical habitat, if any is designated.

All three aspects of the project area fall within Category 3 Habitat for desert tortoise. No aspect of the project is not found within desert tortoise critical habitat, which was designated in 1994 (U.S. Fish and Wildlife Service 1994a) or within a Desert Wildlife Management Area as recommended in the Desert Tortoise (Mojave Population) Recovery Plan (U.S. Fish and Wildlife Service 1994b) and formally adopted in March 2006 as a result of the West Mojave Plan (U.S. Bureau of Land Management 2005). The nearest such areas are the Ord-Rodman Critical Habitat Unit and Desert Wildlife Management Area, and the Fremont-Kramer Desert Wildlife Management Area which are located approximately 10 miles north of the project area.

4.3.3.2 Migratory Bird Treaty Act

The USWFS also affords protection to migratory birds through the Migratory Bird Treaty Act (MBTA). The MBTA protects all resident and migratory wild birds found in the United States, except the house sparrow, starling, feral pigeon, and resident game birds. Resident game birds are managed separately by each state. The MBTA makes it unlawful for anyone to kill, capture, collect, possess, buy, sell, trade, ship, import or export any migratory bird including feathers, parts, nests or eggs.

4.3.3.3 Waters of the United States and Streambeds

The Corps regulates discharges of dredged or fill material into *waters of the United States*. These *waters* include wetlands and non-wetland bodies of water that meet specific criteria. Corps regulatory jurisdiction is pursuant to Section 404 of the Federal Clean Water Act (CWA).

The Regional Water Quality Control Board also regulates discharges of dredged or fill material into *waters of the United States* pursuant to Section 401 of the Federal CWA. The Regional Board's role is to ensure that disturbances in the stream channel do not cause water quality degradation.

Unlike the Corps, CDFG regulates not only the discharge of dredged or fill material, but all activities that alter streams and lakes and their associated habitat. The CDFG, through provisions of the California Fish and Game Code (Sections 1601-1603), is empowered to issue agreements for any alteration of a river, stream, or lake where fish or wildlife resources may be adversely affected. Streams (and rivers) are defined by the presence of a channel bed and bank, and at least an intermittent flow of water. The CDFG typically extends the limits of their jurisdiction laterally beyond the channel banks for streams that support riparian vegetation. In these situations the outer edge of the riparian vegetation is generally used as the lateral extent of the stream and CDFG jurisdiction. CDFG regulates wetland areas only to the extent that those wetlands are a part of a river, stream, or lake as defined by CDFG. Seasonal ponds are within the CDFG definition of wetlands.

Oro Grande Wash is a Water of the US and a streambed and as such falls under the regulatory jurisdictions of the Corps, RWQCB and CDFG.

4.3.3.4 California Endangered Species Act

CDFG also administers the California Endangered Species Act (CESA). The State of California considers an endangered species one whose prospects of survival and reproduction are in immediate jeopardy. A threatened species is likely to become an endangered species in the near future in the absence of special protection or management, and a rare species is one that may become endangered if its present environment worsens. "Species of Special Concern" is an informal designation used by CDFG for some declining wildlife species that are not proposed for listing as threatened or endangered, such as the burrowing owl. This designation signifies that these species are recognized as sensitive by CDFG and may require a special permit for direct impacts.

In coordination with the USFWS the CDFG also administers the MBTA which provides protections for nesting birds that are both residents and migrants, whether or not they are considered sensitive by resource agencies. The CDFG Code 3503 makes it illegal to destroy any birds' nest or any birds' eggs. Code 3503.5 further protects all birds in the orders Falconiformes and Strigiformes (Birds of Prey, such as hawks and owls) and their eggs and nests from any form of take.

4.3.4 <u>Project Impacts</u>

4.3.4.1 Significance Thresholds

The impact evaluation presented below focuses on the proposed physical changes to area landscape and any potential adverse impacts these changes may have on the biological resources. Implementation of this project has the potential to have a significant impact on biological resources within the project area.

Two biological resource issues from the CEQA Initial Study checklist were found to be less than significant and were thus dismissed in the Initial Study. The remaining issues of concerns that would cause impacts to biological resources to be considered significant according to CEQA Guidelines (§15064 and Appendix G) are if the direct, indirect or cumulative effects of the proposed project would:

a. Have a substantial adverse effect, either directly or through habitat modifications, on any species identified as a candidate, sensitive, or special status species in local or regional plans, policies, or regulations, or by the California Department of Fish and Game or U.S. Fish and Wildlife Service?

b. Have a substantial adverse effect on any riparian habitat or other sensitive natural community identified in local or regional plans, policies, regulations, or by the California Department of Fish and Game or U.S. Fish and Wildlife Service?

c. Have a substantial adverse effect on federally protected wetlands as defined by Section 404 of the Clean Water Act (including, but not limited to, marsh, vernal pool, coastal, etc.) through direct removal, filling, hydrological interruption, or other means?

d. Interfere substantially with the movement of any native resident or migratory fish or wildlife species or with established native resident or migratory wildlife corridors, or impede the use of native wildlife nursery sites?

e. Conflict with any local policies or ordinances protecting biological resources, such as a tree preservation policy or ordinance?

f. Conflict with the provisions of an adopted Habitat Conservation Plan, Natural Community Conservation Plan, or other approved local, regional, or state habitat conservation plan? A comparable threshold is expressed in the following language in the "Land Use and Planning" section of the Initial Study Environmental Checklist Form. It reads: "Conflict with any applicable habitat conservation plan or natural community conservation plan?"

The California Native Plant Society (CNPS) publishes and regularly updates the "Inventory or Rare and Endangered Vascular Plants of California." CNPS gathers information from the CNDDB, the CDFG, and amateur and professional botanists throughout the state. Plants listed by CNPS, but not officially listed by the State, nevertheless receive protection under CEQA: that is, impacts to CNPS listed species may be considered significant.

Finally, the State CEQA Guidelines also incorporate the following threshold for determining significant biological resource impacts. Section 15065, "Mandatory Findings of Significance," states that a project having the following impacts shall be considered significant. "The project has the potential to: substantially degrade the quality of the environment; substantially reduce the habitat of a fish or wildlife species; cause a fish or wildlife population to drop below self-sustaining levels; threaten to eliminate a plant or animal community; substantially reduce the number or restrict the range of an endangered, rare or threatened species;…" These issues are addressed as part of the general discussion under issues a-g below.

Each of these issues will be evaluated in the detailed impact analysis presented below. These thresholds of significance will be utilized in this EIR to evaluate the potential impacts associated with implementation of this project.

a. Would the project have a substantial adverse effect, either directly or through habitat modifications, on any species identified as a candidate, sensitive, or special status species in local or regional plans, policies, or regulations, or by the California Department of Fish and Game or U.S. Fish and Wildlife Service?

Apple Valley

No direct impacts will result to sensitive species within the project foot print because all areas within the footprint are developed and currently in use. The WRP facilities are sited within a public park and the associated pipeline alignments lie mostly in the existing paved road with a short segment within an existing unpaved road. The percolation basins will be situated in either a vacant parcel between two single-family residences or on a fallow field adjacent to the Apple Valley Airport. Based on the pre-survey data review and field investigations, TDA concludes that the sensitive species listed above in the results section are currently absent from the project footprint.

There is very little likelihood of wild tortoises or burrowing owl entering the project site from adjacent areas, either to pass through the site or establish residency. Observable human disturbances included (in descending order of prevalence) residences, recreation, paved roads, dirt roads and trails, piles of discarded vegetation waste, domestic dog signs, and off-highway vehicle tracks. It is possible however that a desert tortoise and/or burrowing could passively enter and pass through the site.

This project will not remove any substantial area of foraging habitat for any sensitive species with a potential to occur on site or in the immediate area.

Hesperia

East of the I-15 Freeway, no direct or indirect impacts will result to sensitive species within this project footprint because the footprint occurs in areas that are surrounded by chain link fencing, used for dumping trash, used as paved parking, graded, and/or are near residences and within developed paved and un paved roads that are currently in use. There is no likelihood that a desert tortoise or burrowing owl would enter into the project area between Maple Avenue and West Santa Fe Avenue. It is possible however, that a desert tortoise and/or burrowing owl could passively enter and pass through the facility location sited east of West Santa Fe Avenue and between Maple Avenue and the I-15.

West of the I-15 Freeway, direct impacts may result to suitable Mohave squirrel (MGS) habitat. Exact acreages related to this potential impact have not been calculated since designs of the alternatives are conceptual at this time. It is possible that 5 to 10 acres of suitable Mohave ground squirrel habitat could be impacted should the WRP-1 be site selected near the Oro Grande Wash and associated pipelines be constructed in the paved and dirt roads adjacent to suitable MGS habitat.

The MGS is designated as a Threatened species by the California Fish and Game Commission. MGS have been reported between 1,800 and 5,600 feet elevation from a wide range of habitats including creosote bush scrub, Joshua tree woodland, juniper woodland, Mohave mixed woody

scrub, and saltbush scrub (U.S. Bureau of Land Management 2005), which is found on-site near the Oro Grande Wash. The Alternative A project site is located within the elevational range of the species. There is a moderate level of diversity of native perennial plants, with about nine perennial species identified. In the northern part of the range, winter fat and spiny hop-sage are ecologically important shrubs for MGS. Lawrey tallied 4 spiny hop-sage adjacent to the alignment and 2 winter fat in the western half of the project area. In any case, the presence of these plants does not confirm that the MGS occurs. Although, the west half of the project site is somewhat isolated from other suitable MGS habitat by the California Aqueduct I-15, Highway 395 and existing development, MSG are documented in the area. Given the above information and without focused survey, TDA cannot conclude that MSG is absent from the west half of the project site property. The site is within the vicinity of MSG detections, perennial diversity is moderate, and the site is not completely isolated from undeveloped habitat. Therefore, any disturbance to suitable MSG habitat will require an incidental take permit from the CDFG.

As for desert tortoise or burrowing owl, neither species was located during survey. However, they are documented in the near vicinity of the project area west of I-15 and as a result, either of these two species could enter the project area to pass through or to set up residence. Mitigation measures are identified to address the potential impact to these sensitive species for Alternative A facilities located west of I-15.

The USGS-designated blueline stream, Oro Grande Wash, is present in the project area. It is a jurisdictional dry desert wash (a water of the State and United States) that supports Joshua trees and other cacti protected under specific sections of the local ordinances of the Cities of Hesperia, Victorville, and Adelanto County of San Bernardino. A Protected Plant Plan is typically required by these municipalities before the project can be initiated within these local jurisdictions. Any impacts within the jurisdictional areas of Oro Grande Wash will require permits from the regulatory agencies that have jurisdiction, Corps, CDFG and Regional Board.

<u>Eastside</u>
There are no facilities planned on this site at this time. The biological evaluation was done at a constraints level and the likelihood for the sensitive species identified above to occur on site is low to moderate. No fatal flaws were identified for the future use of this site as a WRP facility.

The two primary sensitive resources near the proposed parcel are Mohave ground squirrel habitat and the Mojave River riparian habitat, and all of the associated sensitive species known to occur there. Construction within the Eastside parcel may require an incidental take permit for Mohave ground squirrel from the CDFG. Prior to any specific development, a survey for this species should be completed. Further, any planned facilities will need to avoid and/or minimize any indirect affects to the riparian area located west southwest of the parcel. Avoidance of the portion of the site that contains riparian habitat and waters of the State and United States will eliminate any direct impact to these biological resources. By undertaking appropriate buffer management actions between any future subregional facilities, including management of issues such as light and glare, stormwater runoff, and noise, and the Mojave River riparian habitat and adjacent woodlands, potential significant biological resource effects can be controlled to a less than significant impact level.

b. Would the project have a substantial adverse effect on any riparian habitat or other sensitive natural community identified in local or regional plans, policies, regulations or by the California Department of Fish and Game of U.S. Fish and Wildlife Service?

Please refer to the hydrology section of this report, which addresses the potential impacts to the Mojave River Transition Zone and the riparian/wetland habitat it supports, due to future modifications of VVWRA discharges from the Westside WRP to the Transition Zone.

Based on the analysis in the Biological Resources Assessment, the proposed project will not have a direct adverse impact any riparian habitat or other sensitive natural community that occurs within the southern Mojave Desert. There is no riparian habitat with the project area of effect (APE) for the Apple Valley Subregional facilities. There is also no riparian habitat within the project APE for the Alternative B Hesperia Subregional facilities. There is no riparian habitat at any location within the project APE for the Alternative A Hesperia Subregional facilities. However, if any facilities must cross Oro Grande Wash, a potential exists to disturb the channel at the bottom of this major wash feature. At this time it does not appear that the channel will be disturbed, but as a contingency measure for the construction of the Subregional plant site shown on Figure 3-5, a mitigation measure is included to provide for adequate compensatory mitigation in accordance with loss of "waters" of the United States or State of California. With implementation of the mitigation measure outlined below, any disturbance of "waters" in Oro Grande Wash will be mitigated to a less than significant impact level.

The only riparian/wetland area located within the project APE occurs at the future Eastside WRP site. The western edge of this site encroaches on the riparian habitat within and adjacent to the Mojave River channel. Since there is no Subregional facility designed for this location at this time, it is not possible to determine whether a future facility will cause impacts to such habitat or to "waters" associated with the Mojave River. For the time being the design objective for a future Eastside WRP site will be strict avoidance of either riparian/wetland habitat and waters of the United States and State of California. If this design objective cannot be met for some reason when a future Eastside WRP is designed, then the mitigation measure outlined below will ensure that adequate compensatory mitigation is provided for the loss of any such habitat or jurisdictional waters.

c. Would the project have a substantial adverse effect on federally protected wetlands as defined by Section 404 of the Clean Water Act (including, but not limited to, marsh, vernal pool, coastal, etc.) through direct removal, filling, hydrological interruption, or other means?

The proposed Subregional facilities are not forecast to adversely impact any jurisdictional waters based on the current design. It is remotely possible that one or more of the Hesperia or Eastside Subregional facilities may result in the temporary or permanent fill of an unknown amount of jurisdictional waters. At this time it is not possible to clearly define the acreage impacts to jurisdictional waters due to the lack of a site specific design showing such impacts at the Hesperia Alternative A Subregional site or Eastside Subregional site. Regardless, the project may require regulatory permits from the CDFG, the Corps and the RWQCB for impacts to jurisdictional waterways. Mitigation is outlined which can be implemented to offset or compensate for both the temporal and permanent loss of riparian habitat that will occur as a result of the proposed project.

d. Would the project interfere substantially with the movement of any native resident or migratory fish or wildlife species or with established native resident or migratory wildlife corridors, or impede the use of native wildlife nursery sites?

None of the project APEs contain the fundamental resources or locational characteristics to support a wildlife movement corridor. With one or two exceptions, all of the pipelines follow existing roadways; the WRPs are proposed for highly disturbed locations, including a public park; and the percolation ponds are bounded by man-made features, including roadways or airport facilities. A review of the applicable General Plans (County, Town of Apple Valley and City of Hesperia) did not identify any wildlife movement corridors within these highly disturbed suburban and rural developed areas. Since no adverse impact can occur to wildlife movement corridors, no mitigation is required.

The Eastside WRP site is located on the northeastern edge of the Mojave River as shown on Figures 3-10 and 3-11. This Mojave River channel serves as a wildlife movement corridor, but any future Eastside WRP facilities would not be located within the channel. As noted above, when future Eastside WRP facilities are designed, they will be designed with the objective of avoiding direct effects on the Mojave River channel and adjacent riparian habitat and to provide sufficient buffer to minimize any conflicts with the habitat and wildlife movement values of the channel. If this cannot be achieved, then a follow-on evaluation of direct and indirect effects will be required in a subsequent or follow-on environmental document.

e. Conflict with any local policies or ordinances protecting biological resources, such as a tree preservation policy or ordinance?

Segments of the Town of Apple Valley Subregional pipelines may adversely impact locally protected plants, including Joshua trees or cacti. Segments of the Hesperia Subregional pipelines and the Alternative A WRP site contain locally protected plants that may be adversely impacted by construction activities. Therefore, mitigation will be required and this will be implemented through a mitigation measure outlined below that requires the preparation and implementation of a Protected Plant Plan that conforms with the local jurisdiction requirements of the Town, City or County, depending on location. With implementation of this measure adequate protection will be extended to locally protected biological resources, including Joshua trees and cacti.

f. Conflict with the provisions of an adopted Habitat Conservation Plan, Natural Community Conservation Plan, or other approved local, regional, or state habitat conservation plan? Or Conflict with any applicable habitat conservation plan or natural community conservation plan?

No adopted habitat conservation plans or natural community conservation plans are known to encompass the Apple Valley or Hesperia Subregional WRPs APE. Similarly, no such plans encumber any of the Eastside Subregional WRP project site. The proposed Apple Valley and Hesperia Subregional WRP facilities would not infringe upon any area known to be proposed as a conservation area nor would it prevent the consolidation of the proposed conservation lands. This is primarily because no sensitive habitat with sufficient value to be protected occurs within the overall project APE. No impact is expected, and no mitigation is required.

g. Plants listed by CNPS, but not officially listed by the State, nevertheless receive protection under CEQA: that is, impacts to CNPS listed species may be considered significant.

Based on the surveys conducted by TDA biologists, no CNPS listed plant species were located within the Subregional WRP APEs (Apple Valley, Hesperia or Eastside), so no potential to

adversely impact such plant species can occur from implementing the proposed project. No mitigation is required.

4.3.5 Mitigation Measures

Regardless of survey results and conclusions given, Mohave ground squirrel, tortoises and burrowing owl are protected by applicable State and/or federal laws. As such, if any of these species are found on-site at the time of construction, all activities likely to affect the animal(s) should cease and the VVWRA and regulatory agencies should be contacted to determine appropriate management actions. Importantly, nothing given in this report, including recommended mitigation measures, is intended to authorize the incidental take of any protected species during project construction. Such authorization must come from the appropriate regulatory agencies, including CDFG (i.e., authorization under section 2081 of the Fish and Game Code) and USFWS.

Although, no desert tortoise or burrowing owls were observed during the focused surveys, the following contingency mitigation measures shall be implemented in case either species are found within the project alignment prior to construction or if an individual of either species enters the project site.

4.3-1 ***Prior to, and, within 30 days of the start of any land disturbance activities, at all project locations, except those bounded by man-made facilities on all sides (such as a roadway through a residential subdivision), a qualified biologist shall conduct focused surveys to determine if desert tortoise or burrowing owl have migrated into the project area of potential effect (APE). If either species is encountered, land disturbance activities shall not commence until the biologist has implemented appropriate measures according to the CDFG and USFWS to clear the site for construction.***

4.3-2 ***A biologist/monitor shall be present at the site during initial land disturbance activities. The biologist/monitor shall remain on-call during construction activities in developed roads. If tortoise or burrowing owls are encountered during construction, construction activities shall be halted in the vicinity of the find and the biologist/monitor called to the site. The contractor shall implement the recommendations of the biologist/monitor.***

4.3-3 ***All personnel associated with the construction on the site shall attend a worker education class. This class shall include general information regarding the MGS, desert tortoise, and burrowing owl; relevant Federal and State laws; and worker responsibilities when working in Mojave desert habitat.***

The following mitigation can reduce the impact to the Mohave ground squirrel (MGS) to a less than significant level.

4.3-4 ***Permanent impacts to the acreage west of I-15 disturbed in support of the proposed Hesperia Alternative A Subregional WRP facilities shall assume presence of MGS and loss of an unquantified amount of occupied MGS habitat will occur as a result of the project.***

a. ***The project proponent shall provide compensation for permanent impacts to MGS habitat by protecting in perpetuity (through property or mitigation bank credit acquisition) habitat for the sensitive species at a ratio of not less than 1:1 (protected: destroyed.) The mitigation property may be acquired by purchase of mitigation credits in a mitigation bank acceptable to the regulatory agencies,***

purchase of occupied habitat in the project area, or rehabilitation of degraded habitat adjacent to known occupied habitat.

b. The project proponent will provide an endowment, to be determined at the time the impact is quantified, adequate to fund ongoing management requirements for the property purchased or rehabilitated.

c. Temporary impacts of habitat are proposed to be mitigated by appropriate revegetation to be approved by the agencies.

d. If required by the Agencies, precautionary mitigation measures will include exclusionary fence placement around construction in areas where MGS are documented to occur to be maintained for the duration of project construction activities. The fenced area will be trapped for MGS, and all MGS will be removed from inside the fenced, relocated to outside of the fenced area and all rodent burrows collapsed within the disturbed area. Night lighting may have an indirect effect on adjacent habitat and any night lighting shall be focused on the immediate area of construction and night lighting shall be limited in time to the minimum night construction essential to support the project.

e. The final mitigation may differ from the above values based on negotiations between the project proponent and CDFG for an incidental take permit (2081 Permit). The project proponent shall retain a copy of the incidental take permit as verification that the mitigation of MGS impacts at a project site has been accomplished. The VVWRA concludes that this is sufficient mitigation for loss of habitat and impacts to MGS as a result of the project. If the regulatory permitting agency(ies) issue permits for this project that specify a different mitigation than provided in this measure, the VVWRA will ensure implementation of such mitigation as long as it is equivalent to or not less than that specified in this measure.

Regarding active bird nests, the following mitigation measure will be applied to this program.

4.3-5 To avoid an illegal take of active bird nests, any grubbing, brushing or tree removal will be conducted outside of the State identified nesting season of February 15 through September 1. Alternatively, project impact areas will be evaluated by a qualified biologist prior to initiation of ground disturbance to determine the presence or absence of nesting birds.

The following mitigation can reduce the impact to rivers, streambeds or wetlands to a less than significant level.

4.3-6 Prior to discharge of fill or streambed alteration of either of the channels along the project alignment, the VVWRA shall obtain regulatory permits from the U.S. Army Corps of Engineers, Lahontan Regional Water Quality Control Board and the California Department of Fish and Game, where required. Mitigation can be provided by purchasing into any authorized mitigation bank; by selecting a site of comparable acreage near the site and enhancing it with a native riparian habitat or invasive species removal in accordance with a habitat mitigation plan approved by regulatory agencies; or by acquiring sufficient compensating habitat to meet regulatory agency requirements. Typically, regulatory agencies require mitigation for jurisdictional waters without any riparian or wetland habitat to be mitigated at a 1:1 ratio. For loss of any riparian or other wetland areas, the mitigation ratio will begin at 2:1 and the ratio will rise based on the type of habitat, habitat quality, and presence of sensitive or listed plants or animals in the affected area. A revegetation plan using native riparian vegetation common to the project area shall be prepared and reviewed and approved by

the appropriate regulatory agencies. The agencies can impose greater mitigation requirements in their permits, but the VVWRA will utilize the ratios outlined above as the minimum required to offset or compensate for impacts to jurisdictional waters, riparian areas or other wetlands.

The following measures will be implemented to address local plant protect ordinances.

4.3-7 In the event that one of the sensitive plant species identified in the CNDDB is positively identified on site, during construction, the plant will be flagged and avoided until the CDFG is notified and takes their opportunity to salvage the plant.

4.3-8 As required by the San Bernardino County plant protection Ordinance (or City or Town ordinances), the project proponents shall develop a cactus relocation plan to offset impacts to Joshua trees and other cactus species that may need to be removed as part of this project. This plan will identify the number and species of cactus to be protected in place or removed and relocated.

The following contingency measures will be implemented to ensure that potential impacts are fully mitigated if desert tortoise or MGS are discovered within the overall project APE.

4.3-9 Following the pre-construction survey, a qualified biologist will make a determination: (1) if a biological monitor shall be present at the site during all land disturbance activities; (2) if desert tortoise fencing needs to be installed around the perimeter of the construction work zone; or (3) if no further action is required.

a. If a desert tortoise is encountered during construction, no person including the biologist will touch the animal. Instead, the biologist will observe the area to see if the desert tortoise has an established burrow or if it is just wandering through the site. If it is clearly just moving through the site, all construction activity near the tortoise will cease until it is safely out of the area. The biologist will contact the USFWS and CDFG to coordinate with them for further instruction. At that time it may be appropriate to erect exclusionary fencing to prevent the re-entry of the desert tortoise back into the site. If the biologist finds that the desert tortoise is residing in a burrow on site, then all construction must cease until the USFWS and CDFG have issued take authority to relocate the tortoise out of the area in the vicinity of the burrow. In this case, land disturbance activities shall not commence until the biologist has implemented the required measures according to the CDFG and USFWS to clear the site for construction.

b. The biologist/monitor shall remain on-call during construction activities. If a desert tortoise is encountered during construction following the initial phases of ground disturbance, construction activities shall be halted in the vicinity of the find and the biologist/monitor called to the site. The contractor shall implement the recommendations of the biologist/monitor. Implementation of the above measures is protective of the environment. Should the regulatory agencies determine an alternative, equivalent mitigation program during acquisition of regulatory permits, such measure shall be deemed equivalent to the above measures and no additional environmental documentation shall be required to implement a measure different than outlined above.

4.3-10 Within 30 days of the start of any land disturbance activities, a qualified biologist shall survey the site to determine if burrowing owls are present and nesting in the construction area. If burrowing owl are encountered and determined to be nesting, land disturbance activities shall not commence until the biologist has implemented the required measures according to the CDFG to clear the site for construction. One such measure may be to passively relocate the owls once the young have fledged the nest.

This type of relocation requires the construction of artificial burrows in the near vicinity and collapsing of the old burrows once the owls have clearly flushed out of the site. If burrowing owls are encountered during construction, construction activities shall be halted in the vicinity of the find and the biologist/monitor called to the site. The contractor shall implement the recommendations of the biologist/monitor.

4.3-11 All project activities will be limited to a well-defined and visually delineated area. Prior to grading and construction activities, the limits of disturbance will be clearly marked with flagging, stakes, or fencing.

4.3-12 All project construction activities shall implement measures to minimize the potential to introduce invasive plant species into construction sites. This shall be accomplished by requiring the contractor to verify that construction equipment used at the WRP facility sites have been washed to minimize introduction of invasive plant species. Also, following construction activities, VVWRA shall monitor and remove invasive plant species until disturbed areas at all facilities are revegetated with native species or covered with hardscape, such as paving, gravel cover, etc.

With implementation of the above mandatory and contingency mitigation measures, all potential adverse impacts to biological resources can be reduced to a less than significant impact level.

4.3.6 Cumulative Impacts

Cumulative biological resource impacts occur when such resources are not avoided, protected or mitigated as outlined above. Based on the mitigation requirements outlined to ensure that biological resources are avoided or otherwise protected or mitigated, no cumulative significant adverse biological resource impacts are forecast to occur if the VVWRA Subregional WRPs and support facilities are implemented as analyzed in this section. The habitat that will be lost in conjunction with this project is of low quality and has no sensitive characteristics. Therefore, its loss has no potential to contribute to a cumulatively considerable loss of sensitive habitat. Based on field studies, no direct impact on riparian/wetland habitat, desert tortoise or MGS is forecast to occur. However, contingency measures have been identified to reduce any loss of habitat that is occupied by these biological resources to a less than significant level. Thus, any impact to these resources cannot result in a cumulatively considerable impact to the individual species or to the regional habitat supporting these species.

4.3.7 Unavoidable and Adverse Impacts

The biological resource evaluation presented above indicates that, with implementation of appropriate mitigation measures, the VVWRA Subregional WRP Project will not cause any significant unavoidable adverse biological resource or land use/planning conflict impact. Mitigation has been incorporated that would reduce all potential adverse biological impacts of the proposed project to a less than significant impact level.

FIGURE 4.3-1
Sensitive Species Record in the Vicinity of the Apple Valley Project Site

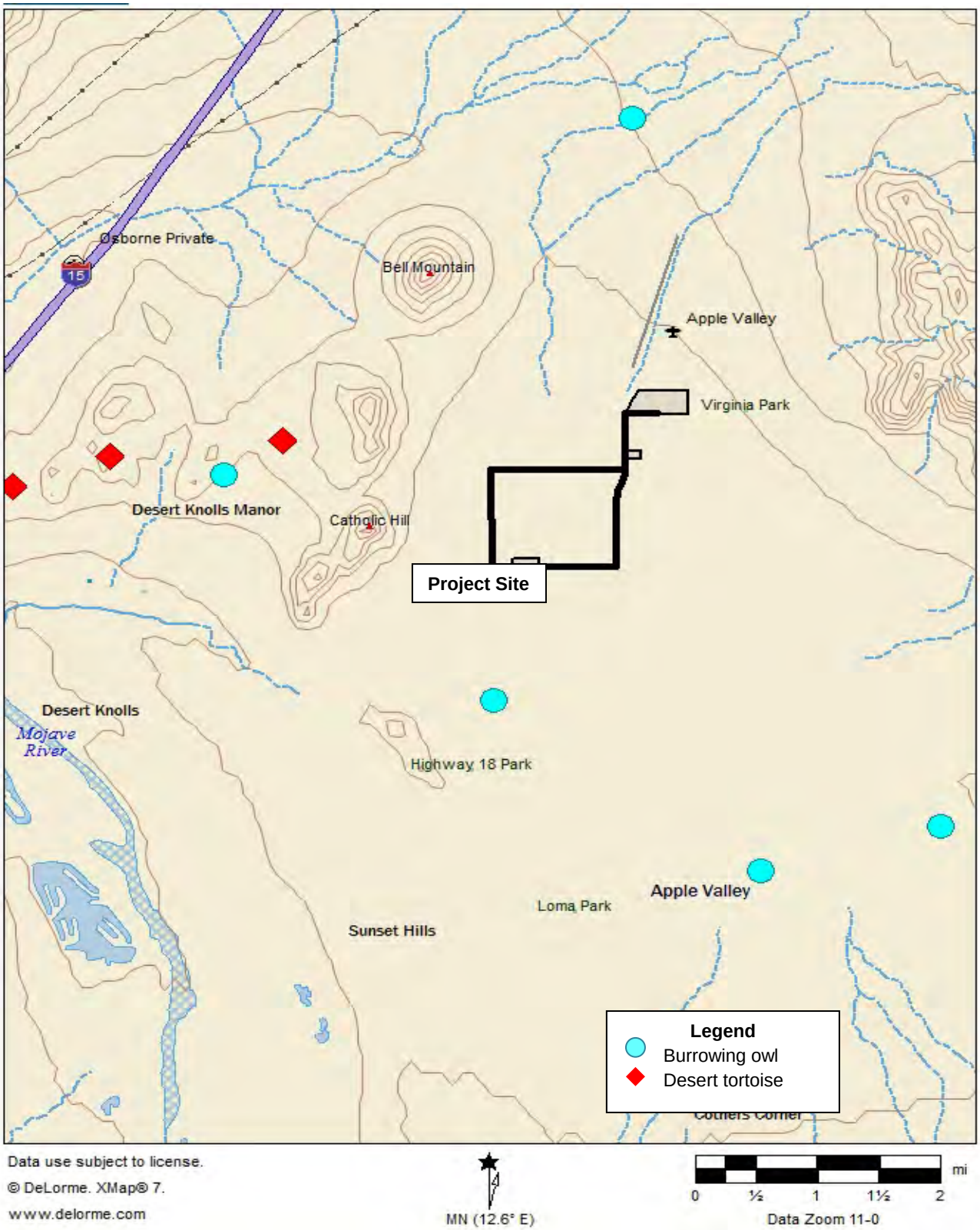

FIGURE 4.3-2
Sensitive Species Records in the Vicinity of the Hesperia Project Site

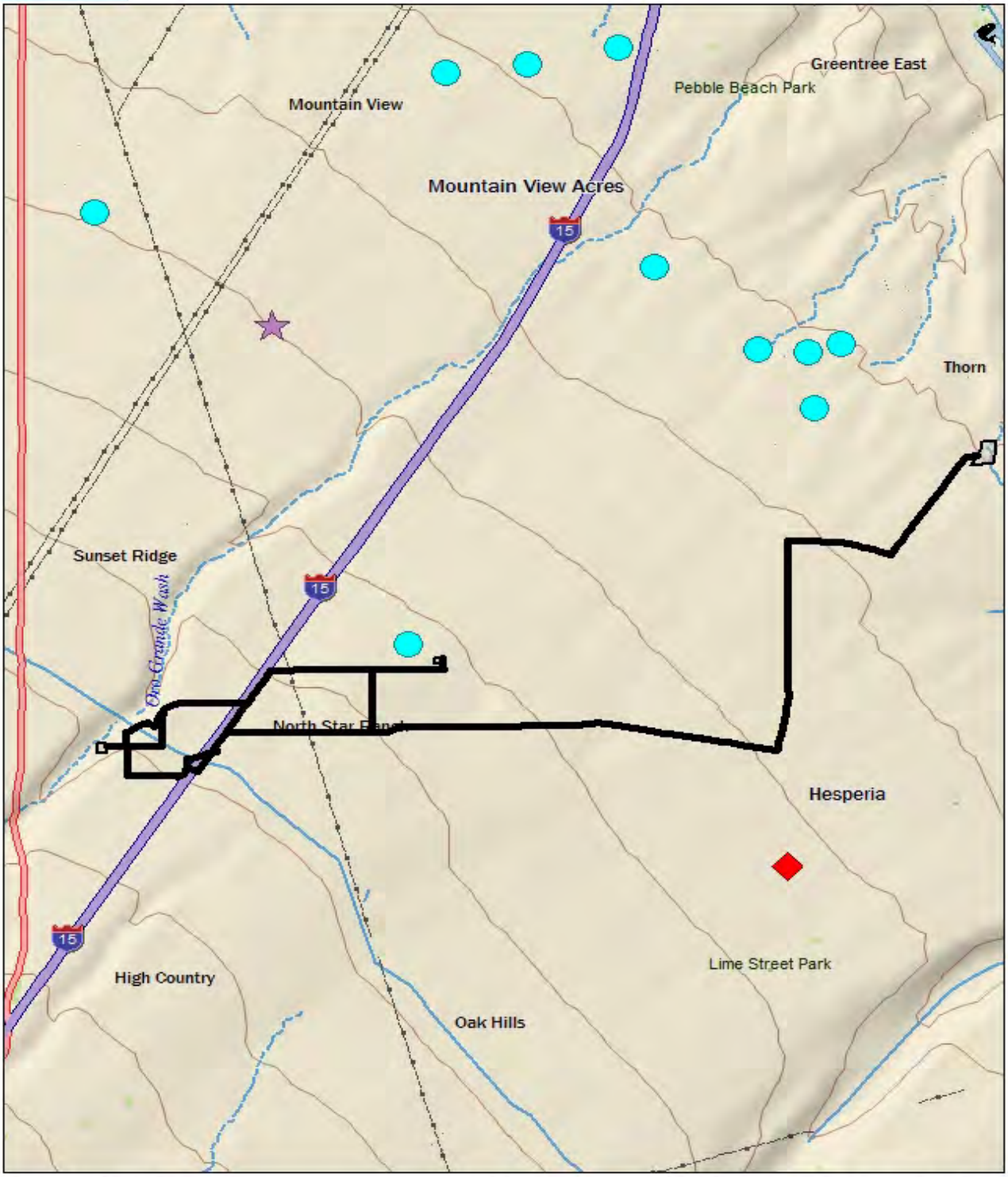

Data use subject to license.
© DeLorme. XMap® 7.
www.delorme.com

MN (12.6° E)

0 ¼ ½ ¾ 1 1¼ 1½ 1¾ mi
Data Zoom 11-1

FIGURE 4.3-3
Sensitive Species Records in the Vicinity of the Proposed Eastside Parcel

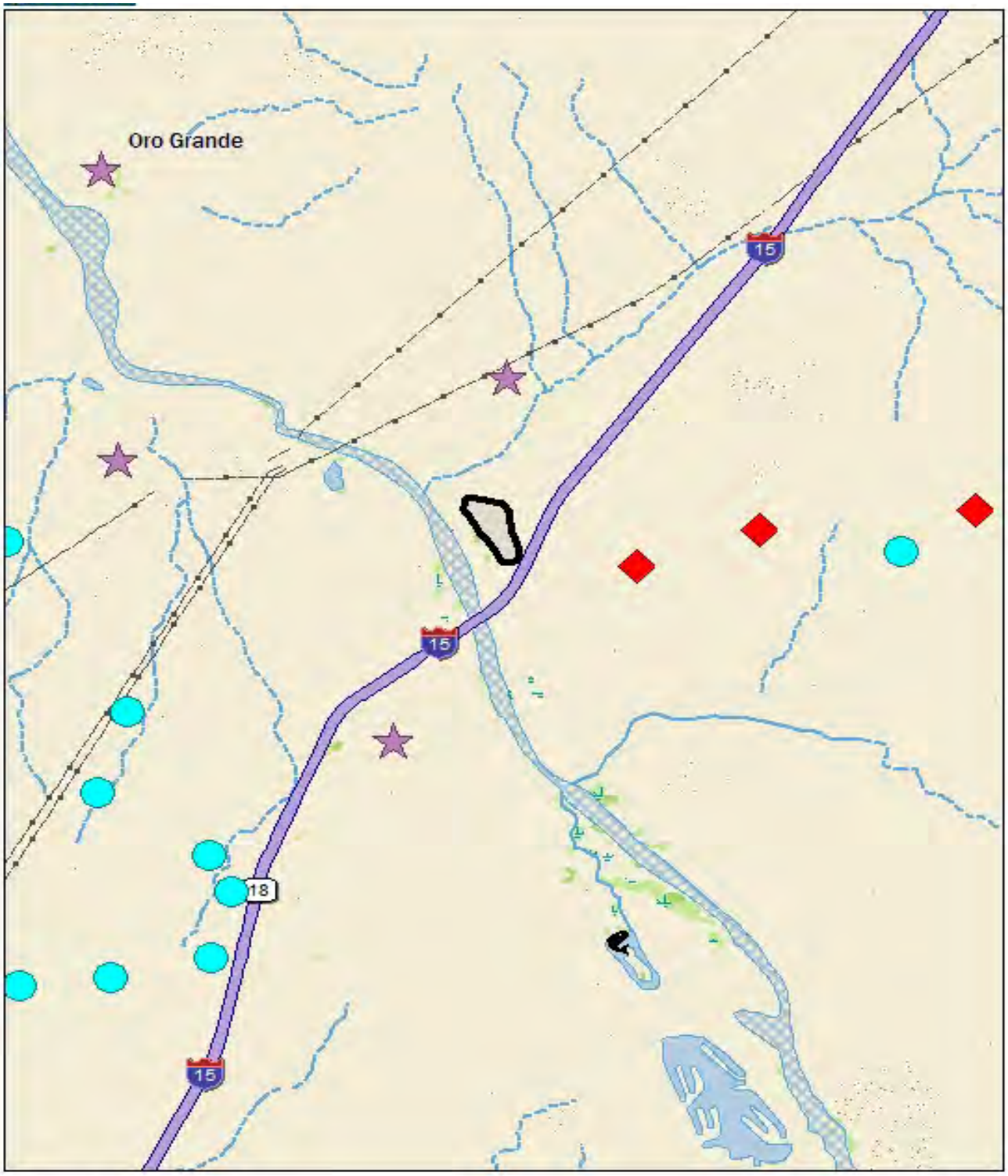

Data use subject to license.
© DeLorme. XMap® 7.
www.delorme.com

MN (12.6° E)

0 ¼ ½ ¾ 1 1¼ 1½ mi
Data Zoom 11-0

4.4 CULTURAL RESOURCES

4.4.1 Introduction

Cultural resources are the physical remains of past human activities that are addressed in the CEQA process in a manner similar to natural resources. The term "cultural resources" encompasses archaeological resources of historic and prehistoric origin. Such resources include artifacts, refuse, and features in both surface and subsurface contexts, that are greater than 50 years in age and/or meet other established criteria to qualify as historic in nature. Prehistoric resources differ from historic resources in that they date from before written records were kept by a culture. Prehistoric and historic resources may occur together on the same site. Paleontological resources, the fossil remains or traces of past life forms, are also addressed in this section because both archaeological and paleontological resources can be exposed during grading, trenching or other ground disturbing activities. A brief explanation of each type of resource follows.

1. Prehistoric archaeological resources in California typically include the remains of villages and campsites, food processing locations, lithic (stone) resource procurement and tool-making locations, and burial and cremation areas. They may also consist of trails, rock art and geoglyphs (ground figures) and isolated artifacts. Prehistoric archaeological resources are the result of activities of the ancestors and predecessors of contemporary Native Americans who occupied the area of potential effect (APE) prior to European recordation of history for the area. In many cases, these resources retain special traditional and sacred significance for contemporary Native Americans.

2. Historic archaeological resources include refuse deposits such as can and bottle dumps, filled-in privy pits and cisterns, melted adobe walls and foundations, collapsed structures and associated features, and roads and trails. They may relate to mission activities, travel and exploration, early settlement, homestead activities, cattle and sheep herding, lumbering, and mining, among other themes. In southern California, historical archeological resources date from the earliest Spanish Mission activities (ca. 1770) when the first Europeans arrived and began to record historical activities in the project area.

   Historic resources are intact structures of any type that are 50 years or more of age. These resources are sometimes called the "built environment" and include houses or other structures, irrigation works, and engineering features, among other items.

3. Paleontological resources are the fossil remains or traces of past life forms, including both vertebrate and invertebrate species, as well as plants. These resources are found in geologic strata conducive to their preservation, typically sedimentary formations. All vertebrate fossils are considered to be significant because they provide information about past environments that occurred at the project location. Other kinds of paleontologic resources must be evaluated individually for significance depending on their potential scientific value.

Known cultural resources are those which have been identified through formal recognition on one or more of the following inventories: National Register of Historic Places, California

Archaeological Inventory, California Historic Resources Inventory, California Historical Landmarks, Points of Historic Interest and others.

The purpose of this DEIR is to provide the necessary information and analysis to determine whether the proposed project would have any adverse effects on archaeological resources, as defined by the National Historic Preservation Act (NHPA) Section 106 and CEQA, that may exist within the project "area of potential effect" (APE), or on paleontological resources; collectively termed "cultural resources" in this document.

4.4.2 Environmental Setting

4.4.2.1 Prehistoric Period

The project area was part of the traditional territory of the Serrano and Vanyume Indians until their populations were removed to the various missions around 1834. The Vanyume Indians, who did not have a very large population, were the northern neighbors of the Serrano Indians. The Serrano Indian territory was centered on the San Bernardino Mountains, extending from Victorville to Twentynine Palms. The group of Vanyume Indians disappeared before 1900. The Serrano descendants can be found today at the San Manuel and Morongo Indian Reservations (CRM Tech 2004).

4.4.2.2 Historic Period

The Victor Valley area was explored by the Spanish explorer, Francisco Garces, in 1776 and was first colonized by the Europeans in 1860. The Mojave Trail was originally an ancient Indian trading route, which was incorporated into the Old Spanish Trail in the early 1830s. In the 1850s, the Mormon Trail or Salt Lake Trail, a historic wagon road extending between Utah and southern California, followed the same route. Since the 1850s, the Victor Valley has served as a crucial component of major east/west transportation routes, including the Santa Fe Railway, U.S. Route 66, and the I-15 Freeway.

Agricultural activities played a dominant role in the early development of the Victor Valley area. Due to the discovery of large deposits of limestone and marble, cement manufacturing became the leading industry in the Valley by the 20th century. George Air Force Base, established in 1941, also added to the local economy. The City of Victorville was established in 1962. Both the City of Hesperia and the Town of Apple Valley were incorporated in 1988. (Please refer to the Identification and Evaluation of Historic Properties Report for the Town of Apple Valley and City of Hesperia Wastewater Reclamation Plants and Related Facilities Project in Volume II of this document for a more detailed account with references.)

4.4.2.3 Paleontologic Resources

Surface alluvium of varying depth in the Apple Valley and Victorville portions of the project area is Holocene in origin, while Pleistocene age alluvium is present within the Hesperia portion of the project area. All of the Apple Valley portions of the project area are highly sensitive for subsurface prehistoric cultural remains. The higher elevation areas near the Mojave River within the City of Victorville, specifically the low ridge that runs the entire length of the Eastside WRP project area, have a high potential for buried archaeological remains; however,

southwestern portion and northeast side of the project area are considered low in potential for such materials. The City of Hesperia portions of the project area also have a low potential for buried prehistoric archaeological remains. (Please refer to the Identification and Evaluation of Historic Properties Report for the Town of Apple Valley and City of Hesperia Wastewater Reclamation Plants and Related Facilities Project in Volume II of this document for a more detailed account with references.)

4.4.3 Environmental Impacts

4.4.3.1 Thresholds of Significance

The purpose of this study is to identify any cultural resources within or adjacent to the project area, and to assist the VVWRA in determining whether such resources meet the official definitions of "historic resources," as provided in the California Public Resources Code or would otherwise be considered significant resources.

According to PRC §5020.1(j), "historical resource' includes, but is not limited to, any object, building, site, area, place, record, or manuscript which is historically or archaeologically significant, or is significant in the architectural, engineering, scientific, economic, agricultural, educational, social, political, military, or cultural annals of California." Specifically, CEQA guidelines state that the term "historical resources" applies to any such resources listed in or determined to be eligible for listing the California Register of Historical Resources, included in the local register of historical resources, or determined to be historically significant by the Lead Agency (Title 14 CCR §15064.5(a) (1-3)).

Regarding the proper criteria for the evaluation of historical significance, CEQA guidelines mandate that "a resource shall be considered by the lead agency to be 'historically significant' if the resource meets the criteria for listing on the California Register of Historical Resources" (Title 14 CCR §15064.5(a)(3)). A resource may be listed in the California Register if it meets any of the following criteria:

(1) Is associated with events that have made a significant contribution to the broad patterns of California's history and cultural heritage.
(2) Is associated with the lives of persons important in our past.
(3) Embodies the distinctive characteristics of a type, period, region, or method of construction, or represents the work of an important creative individual, or possesses high artistic values.
(4) Has yielded, or may be likely to yield, information important in prehistory or history. (PRC §5024.1(c))

A significant cultural resource impact would be any one impact that resulted in the damage, disturbance or destruction of an archeological, paleontological, or other historic/cultural resource. The Cities of Victorville and Hesperia and the Town of Apple Valley have not enacted a local historic preservation ordinance; therefore, the cultural resources evaluation adopted a local perspective for evaluation of local resources using the California register criteria.

4.4.3.2 Project Impacts

Would the project cause a substantial adverse change in the significance of a historical resource as defined in Section 15064.5?

The CRM Tech Identification and Evaluation of Historical Properties Report dated September 22, 2010 evaluated the historical significance of resources within the project areas. The evaluation included a search of available historical records through the Archaeological Information Center (AIC), located at the San Bernardino County Museum and review of historical maps and photos. The CRM Tech technical study is provided in Volume 2, Technical Appendices for review by the public.

According to the AIC, portions of the proposed Town of Apple Valley and City of Hesperia Subregional WRPs and related facilities project areas within the Town of Apple Valley, City of Hesperia, and City of Victorville were evaluated for historical resources in approximately 30 previous cultural resources studies; however, the project area in its entirety had not been previously surveyed. A total of 93 historical/archaeological cultural resources, including 11 isolates and 2 pending sites were previously identified within a one mile radius of the project area. Of these, 14 of the sites and 3 of the isolates were prehistoric, while the remaining sites and isolates dated to the historic period. Further, 12 of the 14 previously recorded prehistoric sites and all 3 of the prehistoric isolates were found in or near the Eastside WRP site, along the banks of the Mojave River. The remaining two prehistoric sites were recorded in Apple Valley.

The historical survey of the project area found that 10 built-environment features met the threshold for formal evaluation as potential historical resources. These features include the National Old Trails Highway, the Mojave Trail, the Southern California Edison Power Line, Toll Road-Houghton's Crossing Road, Atchison, Topeka, and Santa Fe Railway, two prehistoric fire hearths, Murray's Dude Ranch, the South Sierra Power Company Transmission Line, the East Branch of the California Aqueduct, and a Historic-Era Refuse Deposit. Upon further evaluation, the two historic transportation lines, the National Old Trails Highway and the Santa Fe Railway, qualify as historical resources under CEQA. The remaining features do not demonstrate historic significance despite dating to the historic period and require no further consideration. The two historical resources in the project area are detailed below.

National Old Trails Highway represents the alignment of the former U.S. Route 66, which was one of the main arteries of the National Highway System of 1926. The Old National Highway alignment crosses the project area at Eucalyptus Road, west of Santa Fe Avenue, along the proposed pipeline alignment within the City of Hesperia. Where the recorded alignment crosses the project area, the former Route 66 now serves as Hesperia Road, which has been repeatedly upgraded and regularly maintained. Due to the lack of any retained historical character, the proposed project's impacts to this feature will not result in a significant adverse affect on a "historic property or resource."

Atchison, Topeka, and Santa Fe Railway, now the BNSF Railway line) was constructed in the mid-1880s. The Santa Fe Railway line crosses the project area near the intersection of Santa Fe Avenue and Capri Street in the City of Hesperia. As previously stated, the Santa Fe Railway remains fully functional as part of the BNSF Railway system, which has been repeatedly replaced and upgraded over the years. Therefore, due to the lack of remaining historic integrity,

impacts to this feature will not result in a significant adverse affect on a "historic property or resource."

Thus, based on the findings related to identified cultural resources and the analysis of potential effects from implementing the proposed project, no adverse historical resource impacts are forecast to result from implementing the Apple Valley and Hesperia Subregional WRP projects. Although no mitigation is required to address potential for any known significant historical resources, contingency mitigation measures are provided below to address the exposure of unknown subsurface resources from installation of WRP facilities, particularly pipelines which may be trenched below previous disturbances along roadway alignments.

Would the project cause a substantial adverse change in the significance of an archaeological resource pursuant to Section 15064.5?

Based upon an evaluation of the project area conditions, the CRM Tech September 22, 2010 report determined that the project areas located within the City of Hesperia generally have a low potential for subsurface deposits of prehistoric cultural remains. However, the portion of the project area that lies within the Town of Apple Valley has a high sensitivity for subsurface prehistoric cultural remains due to the project's location near the shoreline of the Apple Valley Dry Lake, an ancient freshwater lake, which is considered highly sensitive for Native American cultural remains. Further, the future Eastside WRP site contains an alluvial ridge formation overlooking the Mojave River, which was determined to have a high potential for buried archaeological remains.

The proposed Apple Valley WRP and lift station site are located within a site already developed as a public park. The pipeline associated with the proposed Apple Valley WRP will be located within already disturbed road rights-of-way. Due to the already disturbed nature of these locations, construction of these facilities is not forecast to result in significant impacts to archaeological resources. The two proposed alternative locations for the percolation basins to be constructed within the Town of Apple Valley include a vacant parcel within a residential area and a vacant parcel located within the southern portion of the Apple Valley Airport, which was previously used for agricultural purposes. The historic resources report prepared by CRM Tech recommends that archaeological monitoring be conducted during all trenching, excavation, and earth moving operations conducted within Apple Valley to ensure proper handling of any cultural materials unearthed during construction.

Based upon the low sensitivity of the project areas located within the City of Hesperia and the disturbed nature of the proposed project facilities locations, the historic resources report determined that the construction of the City of Hesperia WRP and related facilities will not result in significant impacts to archaeological resources. However, mitigation is recommended below in the event that buried cultural materials are encountered during construction activities.

Further, based upon the high sensitivity of the proposed future Eastside WRP site within the City of Victorville, the historic resources report recommends that a focused cultural resources survey be conducted at the site prior to any future planned construction of such facilities at this location. Mitigation is included below to address these issues.

Would the project directly or indirectly destroy a unique paleontological resource or site or unique geologic feature?

As previously discussed, the project areas located within the City of Hesperia have a low potential for subsurface cultural remains due to the presence of young stream (Holocene) alluvium and the fact that the proposed facility locations are previously disturbed. However, the project areas located within the Town of Apple Valley and the City of Victorville were determined to have a high sensitivity for the presence of subsurface prehistoric cultural remains. The Apple Valley WRP and related facilities would be located near the shoreline of the ancient Apple Valley dry lakebed, which has a high potential for the presence of Native American cultural remains. In addition, the future proposed Eastside WRP site contains an alluvial ridge formation, which was determined to be favorable to prehistoric human occupation and is therefore highly sensitive for the presence of subsurface prehistoric cultural remains. Therefore, there is a potential for encountering paleontological resources at the project areas located within Town of Apple Valley and the City of Victorville. Paleontological resource mitigation measures are provided that will require monitoring, collection and curation of paleontological resources.

Would the project disturb any human remains, including those interred outside of formal cemeteries?

As stated above, the project areas located within the Town of Apple Valley and the City of Victorville have a high potential for the unearthing of subsurface cultural remains. The mitigation measures outlined below will ensure that any human remains exposed will be treated with dignity and propriety.

4.4.4 Mitigation Measures

Based on the findings and analysis presented above, the following mitigation measures will be implemented prior to and during project construction.

4.4-1 ***If unknown buried cultural or paleontological resources are discovered during project construction, all work in the area of the find shall cease, and a qualified archaeologist or paleontologist shall be retained by the project sponsor to investigate the find, and to make recommendations on its disposition. The VVWRA shall implement the archaeologist's recommendations as long as the cost does not exceed professional norms.***

4.4-2 ***If human remains are encountered during construction, all work shall cease and the San Bernardino County Coroner's Office shall be contacted pursuant to procedures set forth in Section 7050.5 of the Health and Safety Code. The VVWRA shall be notified and actions to manage the remains shall be documented in a report to the VVWRA.***

4.4-3 ***VVWRA shall arrange to have a professional archaeologist monitor all trenching, excavation and other earth-moving activities in the Apple Valley portion of the APE. The archaeologist shall ensure proper and timely evaluation and treatment of any cultural resource materials unearthed in this area. If any cultural resources are encountered during construction monitoring, a professional report detailing findings from the management activities shall be prepared under Authority direction and retained.***

4.4-4 ***Prior to any planned construction activities at the future Eastside WRP site, a focused cultural resources survey shall be conducted to determine if any "historic properties" or "historical resources" are present within the project site that may be adversely affected by construction of the Eastside WRP.***

With implementation of the above mandatory and contingency mitigation measures, all potential adverse impacts to cultural and paleontological resources can be reduced to a less than significant impact level.

4.4.5 Cumulative Impacts

Mitigation measures have been identified that will be implemented to control potential cultural and paleontological resource impacts for the proposed project to a less than significant impact. Based on these measures, the proposed project is not forecast to cause or contribute to cumulatively considerable impacts to cultural and paleontological resources in the project area.

4.4.6 Unavoidable Adverse Impacts

The construction to be carried out for the proposed project will disturb surface areas and subsurface areas within the Cities of Hesperia and Victorville and the Town of Apple Valley. The historic resources report determined that two historic resources or portions thereof, occur within the project area. However, it was determined that due to the upgrade and maintenance of these to historical transportation lines, the alteration of these facilities through implementation of the proposed project would not constitute significant impacts to historical resources. Further, although the proposed facility locations located within the City of Hesperia and the Apple Valley WRP, lift station, and pipeline locations would be located on previously disturbed sites, the two proposed alternative locations for the percolation basins within the Town of Apple Valley and the future proposed Eastside WRP site would be located on vacant sites with a high potential to disturb subsurface archaeological resources. No unavoidable adverse effects on historical resources are expected to result from implementation of the proposed project. Procedures have been established to require avoidance or recordation of cultural and paleontological resources and retain the knowledge that discovery and recordation of these resources will provide. Implementation of the mitigation measures presented above will serve to reduce potential unavoidable significant effects on cultural and paleontological resources to a less than significant level. No unavoidable significant adverse cultural resource impacts are forecast to result from project implementation.

This page left intentionally blank for pagination purposes.

4.5 HYDROLOGY / WATER QUALITY

4.5.1 Introduction

The analysis in this section focuses on potential hydrology and water quality impacts associated with implementing the Apple Valley and Hesperia Subregional Wastewater Reclamation Plants (WRPs) Project. This section will evaluate the available information about the background hydrology and water quality and forecast the type of impacts that may occur, including identification of mitigation measures that can ensure potential impacts from constructing and operating the Subregional WRPS and related facilities activities are minimized to the extent feasible. This Subchapter also addresses the environmental issues in the Utilities/Service Systems section that focus on wastewater treatment facilities and water supply. Refer to Subchapter 8.1, which contains a copy of the Initial Study for the proposed project.

In addition to the standard hydrology and water quality issues that are addressed in this Subchapter of the DEIR, a number of specific issues were raised in two comment letters provided by the Lahontan Regional Water Quality Control Board and the Apple Valley Ranchos Water Company. These comment letters are reproduced in Appendix 8.2 of this DEIR and are summarized in Chapter 2 of the DEIR. Specific responses are also provided to the issues raised in these comment letters. The responses are provided in the same manner as the analysis for the other topical evaluations presented below.

Over the past several years, VVWRA has compiled several water quality studies for the Victor Valley Region, with a primary focus on the Mojave River. In addition, VVWRA recently completed a Cumulative Impact Analysis (CIA) that addresses water quality issues related to existing operations of the Westside WRP; the expansion of the Westside WRP; and the future operation of the Apple Valley and Hesperia Subregional WRPs. The most recent comprehensive analysis of water resources is compiled in the Mojave Water Agency's 2004 Regional Water Management Plan (RWMP), which integrates several other reports. The analysis in the following text relies extensively on these three reports:

- Victor Valley Wastewater Reclamation Authority "Cumulative Impact Analysis, Final Draft," September 2010, Larry Walker Associates, Inc. (CIA);
- Mojave Water Agency "2004 Regional Water Management Plan," February 24, 2005 (RWMP); and
- Victor Valley Wastewater Reclamation Authority "Mojave River Characterization Study Water Quality and Aquatic Life Characterization Report," March 2010, Larry Walker Associates, Inc. (MRCS)

4.5.2 Environmental Setting

4.5.2.1 Existing Wastewater Management

The information regarding hydrology and water quality issues in the Alto Subbasin of the Mojave River Basin is abstracted from two reports: the RWMP (Mojave Water Agency) and the CIA (Larry Walker Associates). Where text is abstracted from the referenced documents for presentation in this document, it is printed in italics in the following text. Note that figure and

table numbers have been edited in the cited text to conform to the figure numbering sequence in this EIR. The following information is abstracted from Section 1, Introduction, of the CIA.

At the present time domestic wastewater is managed in one of two ways within the Victor Valley. At one time the whole of the Victor Valley disposed of wastewater through subsurface septic tank/leach line systems. As the density of development within the Valley and the total population increased in the 1970s, the Lahontan Regional Board required the replacement of these subsurface septic tank systems with connection to a centralized wastewater collection system and treatment at a centralized wastewater treatment plant, now typically called a water reclamation plant. Wastewater collection and treatment were initiated in the higher density areas of the Victor Valley and gradually spread to all of the cities and communities with typical urban or suburban development density.

However, in limited areas within the Victor Valley and surrounding areas, those areas with large lots have retained their subsurface septic tank systems, which discharge domestic wastewater to septic tanks and then into leach lines that allow the gradual percolation of the septic tank treated effluent into the vadose zone (the subsurface area between the discharge point and the groundwater table) for disposal and natural treatment by the soil/sediment. Except for these areas, the remainder of the Victor Valley now receives centralized wastewater treatment at two locations. Throughout the Valley, an extensive collection system delivers wastewater to the Westside Regional Water Reclamation Plant (Westside WRP) for treatment and discharge to the Mojave River channel and to adjacent percolation ponds. The second centralized wastewater management system is located in the City of Adelanto, which installed a separate collection and treatment system for the City about 10 years ago. Treated effluent in the City of Adelanto is percolated into the regional aquifer. These treatment systems (note that an industrial wastewater treatment facility was recently built and placed in operation at the Southern California Logistics Airport (SCLA)) handle all of the wastewater generated within the Victor Valley. The Victor Valley Wastewater Reclamation Authority (VVWRA) operates the Westside WRP and is also the proponent for the Subregional WRPs.

The CIA provides the following summary of the Westside WRP.

VVWRA owns and operates the Victor Valley Regional Wastewater Treatment Plant (referred to in this document as the Westside Regional Water Reclamation Plant), located in Victorville, California. The Westside Regional Water Reclamation Plant (WRP), with associated infrastructure, began operating in 1981, providing tertiary level treatment for up to 4.5 million gallons per day (mgd) average flow. VVWRA currently treats an average flow of approximately 12 mgd of wastewater. The Westside Regional WRP receives wastewater by means of interceptor sewers from the cities of Victorville (including the Southern California Logistics Airport (SCLA)/George Air Force Base (GAFB)) and Hesperia, the Town of Apple Valley, and San Bernardino County Service Areas 42 (Oro Grande) and 64 (Spring Valley Lake). The Westside Regional WRP treats a portion of the flow to a tertiary level and the remaining flow to a secondary level. A majority of the tertiary treated wastewater effluent is discharged to the Mojave River (adjacent to the Westside Regional WRP) and a smaller amount is currently used as recycled water to irrigate landscaping at the treatment plant and the nearby Westwinds Golf Course. Victorville and the surrounding desert communities are areas of rapid population growth. This population growth affects the planning and operation of wastewater treatment facilities in the region in several ways, including, increased need for treatment capacity,

discharge locations, and interceptor sewer line capacity. Moreover, the population growth also increases the need for quantities of potable and non-potable water resources.

VVWRA plans to address the needs for increased treatment capacity, discharge locations, and water resources through multiple actions. VVWRA proposed to increase the Regional Facility capacity from 12.5 million gallons per day (mgd) to 18 mgd. With these increases in plant capacity, VVWRA proposed to increase the allowed discharge to the Mojave River from 8.3 mgd up to 14 mgd and to build additional new south percolation ponds to supplement the existing percolation ponds. Additionally, VVWRA proposed to upgrade the Westside Regional WRP to a UV disinfection system as part of the Phase III.A project. The 18 mgd expansion was completed in April, 2009. Phase III.A is anticipated to be completed January, 2013. The combination of the 18 mgd expansion and the Phase III.A upgrade at the Westside Regional WRP is referred to in this document as the Westside Regional WRP upgrade.

VVWRA's approach to both handling wastewater flow and sustaining local water supplies is to strategically locate subregional water reclamation plants. Three Subregional WRPs are proposed, the Hesperia WRP, the Apple Valley WRP, and the Eastside WRP. These WRPs represent the first step in preparing for the people, businesses, and industry that are both the cause and sustainers of regional growth. The WRPs will be scalping facilities, meaning each will treat a portion of the wastewater from its local collection system, reuse the treated water in beneficial manners, and return solids to the sewer for treatment at the Westside Regional WRP. The Subregional WRPs will reduce the overall load on the collection system and the Westside Regional WRP while creating recycled water, which is a valuable and increasingly important resource in this region. Another benefit of locating the Subregional WRPs farther up the watershed is the reduction of recycled water infrastructure and the subsequent energy costs of pumping the recycled water back up grade to the recycled water uses. This is also in keeping with the City of Hesperia Recycled Water Master Plan (Carollo, 2008).

VVWRA has determined that the existing infrastructure, wastewater collection system and treatment facilities will require major expansions in order to convey and treat the wastewater from future growth. A major challenge that faces VVWRA is the limitations on the existing collection system. The existing trunk sewers that convey wastewater from the communities of Apple Valley and Hesperia are currently constrained and cannot accommodate future growth. The Subregional WRPs allow VVWRA to address the backbone collection system limitations without constructing miles of new trunk sewers to the Westside Regional WRP. Trunk sewer capacity and planning concepts of the Subregional WRPs is discussed further in the report - Planning and Environmental Services to Develop Subregional Reclamation Facilities (Boyle, 2005).

VVWRA was previously permitted to discharge 8.3 mgd of effluent to the Mojave River at discharge point 001. The permitted volume of surface water discharge has been increased to 14 mgd in the 2008 NPDES permit. Discharge point 001 is located on the western edge of the Mojave River riverbed, and effluent is discharged into a ponded wetland located at the discharge point. This wetland area extends northward for approximately one mile parallel to and bordering the Mojave River channel, which begins to flow at a variable distance downstream of the discharge. The remainder of the VVWRA discharge that is not discharged to surface water is discharged to percolation ponds at the Westside Regional WRP.

VVWRA is planning to execute the Phase III upgrade of the Westside Regional WRP. VVWRA plans to construct Phase III under two construction contracts referred to as Phase III.A and Phase III.B. Phase III.A will include an ultraviolet disinfection system, a biogas scrubbing system and tertiary filtration, primary clarification and grease skimming upgrades. The maximum discharge to the Mojave River during Phase III.A will be 14 mgd. Phase III.B may be conducted in the future, and consists of adding solids dewatering facilities. Prior to the initiation of the Phase III.A project, the existing treatment processes will be optimized to reduce concentrations of some constituents, primarily nutrients.

4.5.2.2 Mojave River Hydrology

The following description of the Mojave River Hydrology is abstracted from the CIA. It provides basic information regarding the background hydrology conditions in which the existing wastewater treatment system operates and the setting in which the proposed Subregional WRPs will operate.

The Mojave River Watershed encompasses approximately 5000 square miles and is located entirely within San Bernardino County (NRCS Calwater). The watershed includes the cities and towns of Victorville, Hesperia, Apple Valley, Adelanto, Hinkley and Barstow (Figure 4.5-1). The Mojave River begins in the San Bernardino Mountains and flows northeast through the Victor Valley until it ends at Silver Dry Lake near Baker, covering a distance of approximately 120 miles. The Mojave River has two perennial tributaries which are both located in the San Bernardino Mountains, Deep Creek and the West Fork of the Mojave River. These tributaries converge at the Forks (Mojave Water Agency, 2004) upstream of the Mojave Forks Dam (Maxwell). The river downstream of the dam is composed of both surface and subsurface flows, though is typically dry in most locations. The exceptions to this occur during flooding due to intense storm events, where subsurface geologic features force the water to the surface (DWR, 2004), and downstream of the VVWRA discharge. The river is perennial in the vicinity of the Upper and Lower Narrows (approximately four miles upstream of the VVWRA Westside Regional WRP), in the section immediately downstream of VVWRA's regional treatment plant, and in Afton Canyon near Barstow (Mojave Water Agency, 2004). The River is typically dry upstream of VVWRA's discharge between the Lower Narrows and VVWRA. The average annual discharge of total flows at Lower Narrows for the period from 1931 to 2001 was 52,400 acre-feet (Mojave Water Agency, 2004).

Roughly 90 percent of surface flows entering the Mojave River Basin come from runoff in the mountains. The annual average precipitation in the San Bernardino Mountains is 42 inches, whereas the average annual precipitation in the rest of the watershed rarely exceeds 6 inches. The most arid locations in the watershed, such as Afton Canyon, receive less than 4 inches of rain annually (Maxwell). The majority of the surface flows percolate into the groundwater basin (DWR, 2004).

4.5.2.3 The Upper Mojave River Valley Groundwater Basin

The Upper Mojave River Valley Groundwater Basin underlies an elongated north-south valley in which the Mojave River intermittently flows. The basin covers a surface area of approximately 413,000 acres and the average effective thickness of the basin is 300 feet (DWR, 2004). The groundwater basin is bounded on the north by a roughly east-west line between basement rock

outcrops in the Shadow Mountains and outcrops near Helendale. The basin is bounded on the south by the contact between Quaternary sedimentary deposits and unconsolidated basement rocks of the San Bernardino Mountains. The western boundary is a surface drainage divide between the Mojave and the El Mirage Valley Basin, as well as a contact between alluvium and basement rocks that form the Shadow Mountains. The Helendale fault to the southeast and the basement rock outcrops in the mountains surrounding Apple Valley make up the eastern boundary (DWR, 2004). The larger Mojave River Basin is considered a closed basin (Mojave Water Agency, 2004).

Natural recharge of the basin comes from direct precipitation and surface flow and underflow from the Mojave River. A large contribution to the basin occurs when the Mojave River is flowing, but this is a sporadic event. Treated wastewater effluent, septic tank effluent, fish hatchery effluent, and irrigation waters also percolate and enter the groundwater basin.

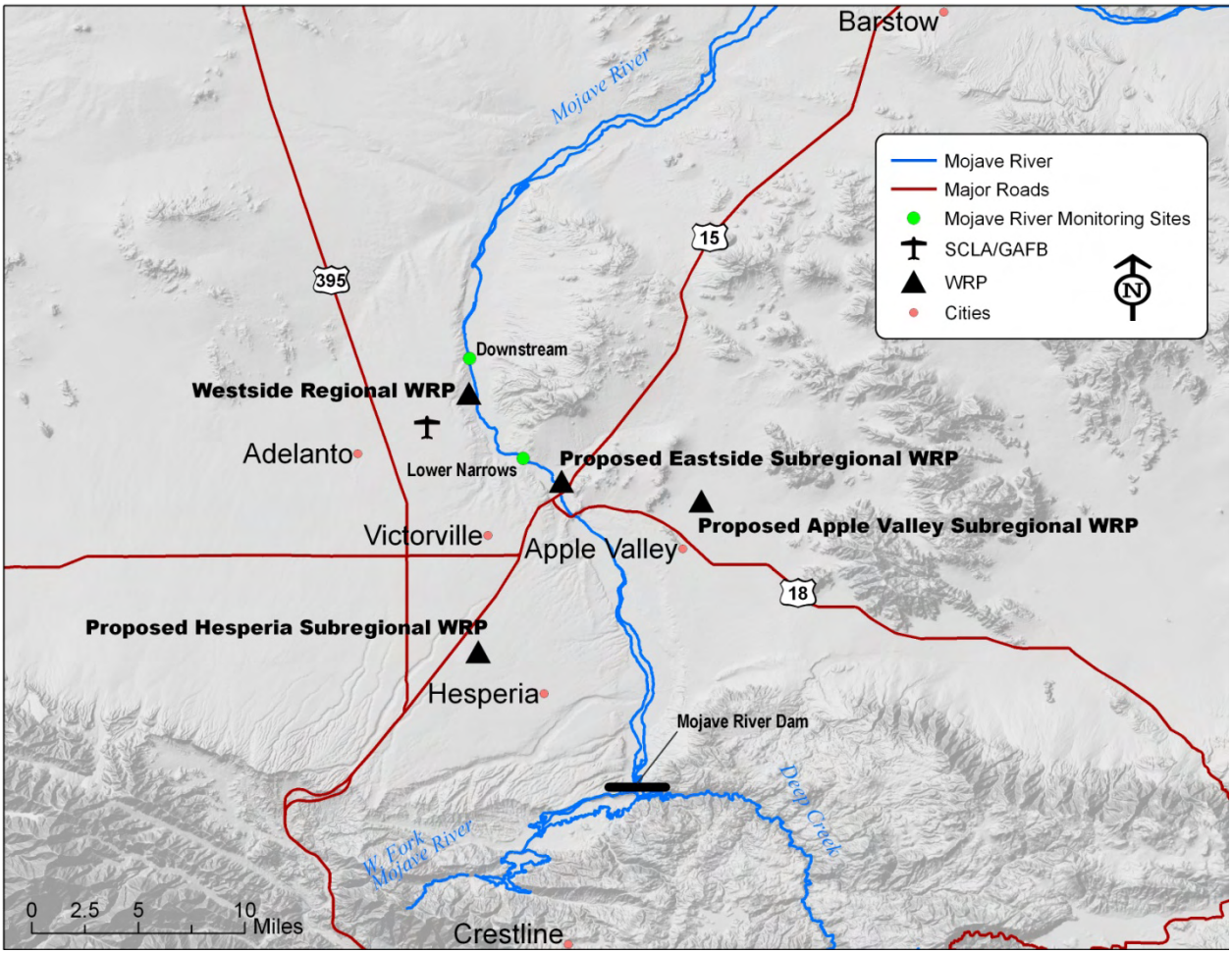

Figure 4.5-1. VVWRA Current and Proposed Facilities in the Victor Valley

Groundwater flow within the basin is generally toward the active channel of the Mojave River and along its course through the valley. The Helendale fault forms a barrier to the flow of groundwater in the southeast corner of the basin that causes groundwater to flow into the Mojave River Drainage instead of under a surface drainage divide into the Lucerne Valley Basin (DWR, 2004).

The Mojave River Basin was recognized as being in overdraft beginning in the 1950's. DWR's Bulletin 118, which documents groundwater conditions, listed the Upper Mojave River Valley Groundwater Basin in overdraft in 1980, but did not address overdraft in the 2003 edition. Additionally, the basin has been subject to adjudication in the Mojave Basin Area Judgment, with the Mojave Water Agency named Watermaster. Essentially all water used by the Mojave Water Agency comes from pumped groundwater. State Project Water is also imported in varying amounts. Some of the imported water is used, and will be used in the future, to recharge the basin (Mojave Water Agency, 2004).

The water quality of the basin has some impairment. TDS is typically less than 500 mg/L, however some wells contain higher concentrations. The southern portion of the basin has high nitrate concentrations, and high iron and magnesium concentrations are found near Oro Grande. Arsenic concentrations are also of concern in some locations (DWR, 2004; Mojave Water Agency, 2004).

The VVWRA Westside Regional WRP is located in the Alto Transition Zone, near the Alto Subarea, which are two of six sub-basins within the Upper Mojave River Valley Groundwater Basin defined for management purposes (USGS, 2001) (Figure2). The aquifers potentially impacted by operations at the Westside Regional WRP include the regional aquifer, also known as the lower aquifer or fan unit, and the floodplain aquifer of the Mojave River (Figure 4.5-3). Historically, the regional aquifer flow has generally trended in a northeasterly direction under the Westside Regional WRP. However after percolation ponds were constructed and put into use in 2002, groundwater mounding has been observed under the south ponds, creating more complex subsurface flow in the area (SL Ross Consulting, Inc, 2006) (***Figure*** *4.5-4 and Figure 4.5-5). The floodplain aquifer gradient follows the active Mojave River channel, which is approximately north in the vicinity of the Westside Regional WRP. Evidence of faulting parallel to the channel and just east of the Southern California Logistics Airport (the proposed Shay Road Fault) may impede the flow of groundwater between the two aquifers in this area.*

The three proposed Subregional WRPs are all located in the Alto Subarea of the Upper Mojave River Valley Groundwater Basin (USGS, 2001). The proposed Hesperia and Apple Valley Percolation Ponds could impact the regional aquifer and, if hydraulically connected the floodplain aquifer as well. The Eastside Subregional WRP could potentially impact both the floodplain aquifer and regional aquifer because of the proximity to the Mojave River. Regional groundwater gradients in the vicinity of all proposed locations trend towards the Mojave River channel (Refer to Figure 4.5-6). However, local groundwater flow could be influenced by several faults in the vicinity, including the Apple Valley fault, as well as the Narrows fault, Adelanto fault, and Proposed Shay Road fault, It is not currently known to what extent these features may impede groundwater flow in either aquifer (USGS, 2001).

The floodplain unit extends 50 to 200 feet deep in the basin but is restricted to within one mile of the active Mojave River channel (USGS, 2001). The estimated effective thickness of the regional aquifer in the Upper Mojave River Valley Groundwater Basin is about 300 feet thick (DWR, 2004), and unconformably underlies and surrounds the floodplain aquifer throughout most of the Mojave River groundwater basin (USGS, 2001).

For all of the historic studies conducted regarding water resources and water supplies, there is not a great deal of water quality data, except for specific well locations. The following information is provided on the status of water quality based on a general description contained in the RWMP and some limited, but more detailed information contained in the CIA. The data in the CIA is as location specific as possible, but is somewhat limited. The reader is referenced to the CIA for a discussion of surface water quality in the Mojave River, particularly immediately downstream of the Westside WRP (see Chapter 5.4 of the CIA in the Technical Appendices, Volume 2 of this DEIR). The following groundwater quality data are abstracted from the RWMP, beginning on page 4-28 of that document.

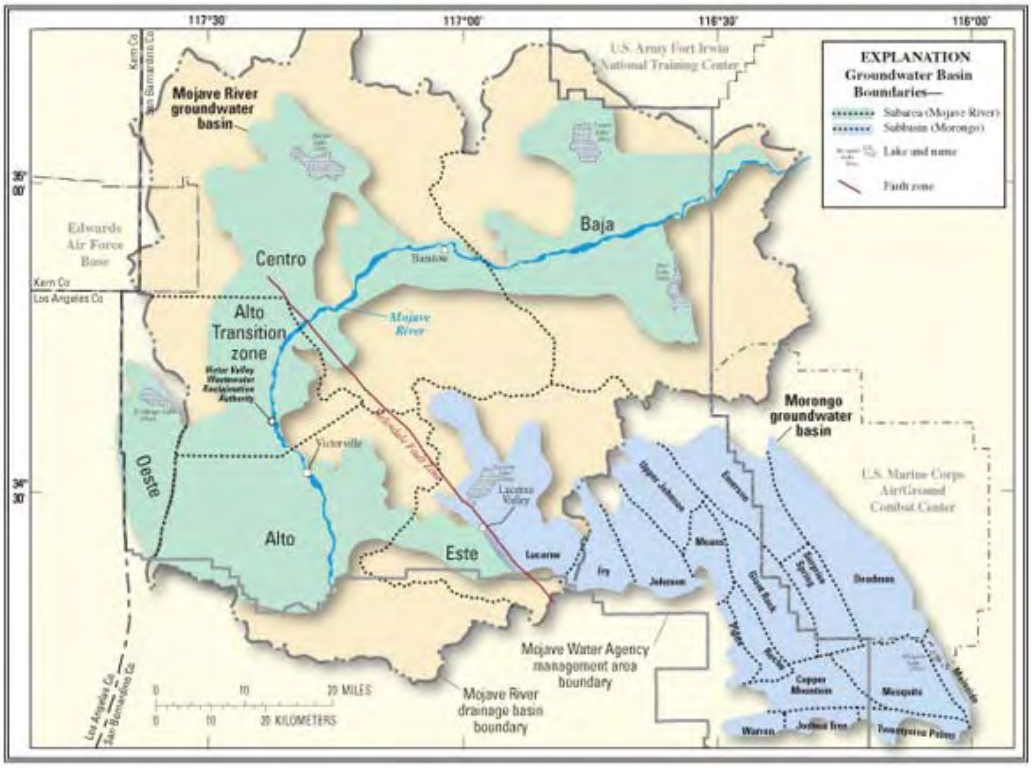

Location of groundwater basins

Figure 4.5-2. Groundwater Basin Boundaries and Subareas (USGS 2008)

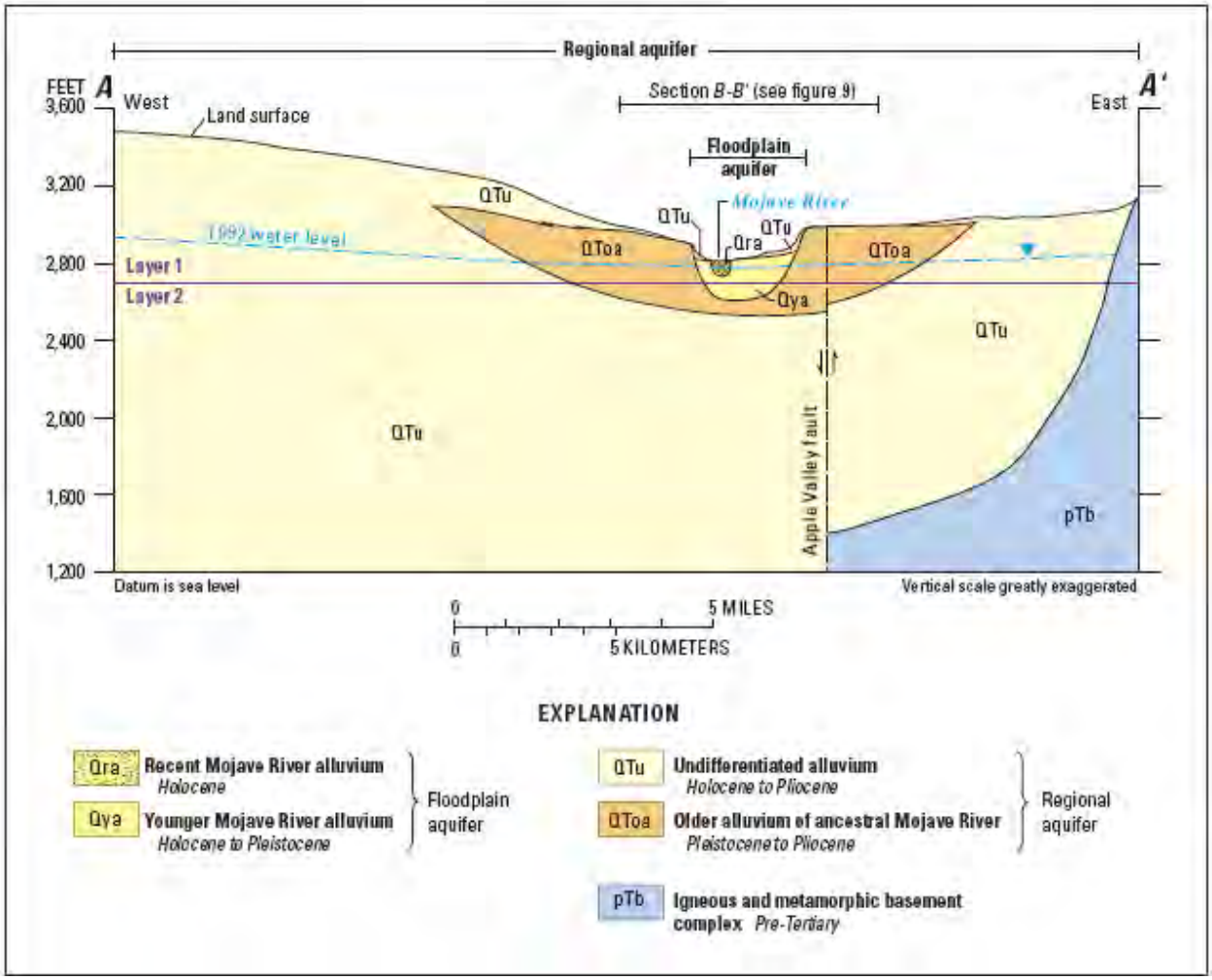

Figure 4.5-3. Geohydrologic cross-sectional map of the Regional and Flood Plain Aquifers (USGS 2001)

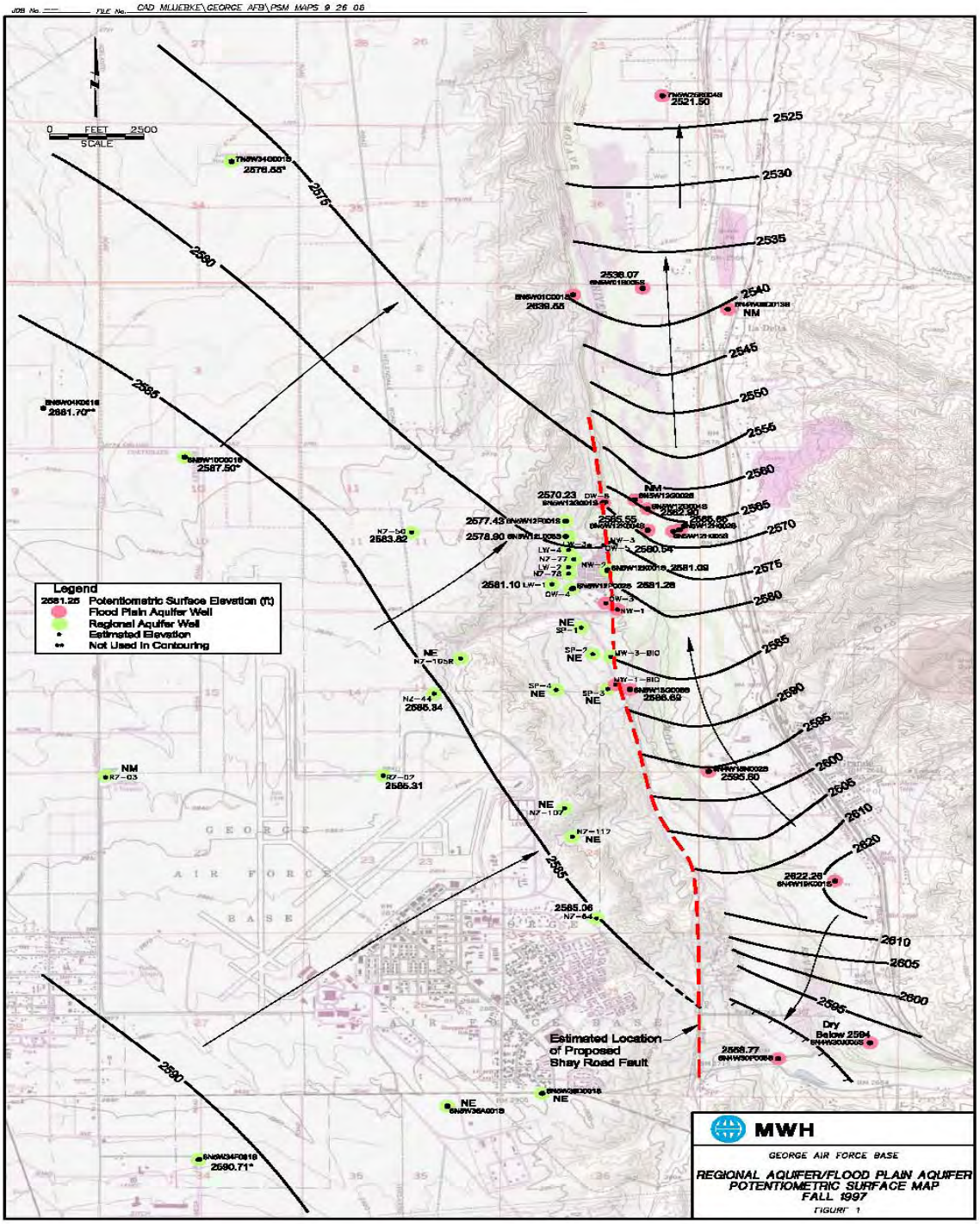

Figure 4.5-4. Potentiometric Surface Map of the Regional & Flood Plain Aquifers – Fall 1997

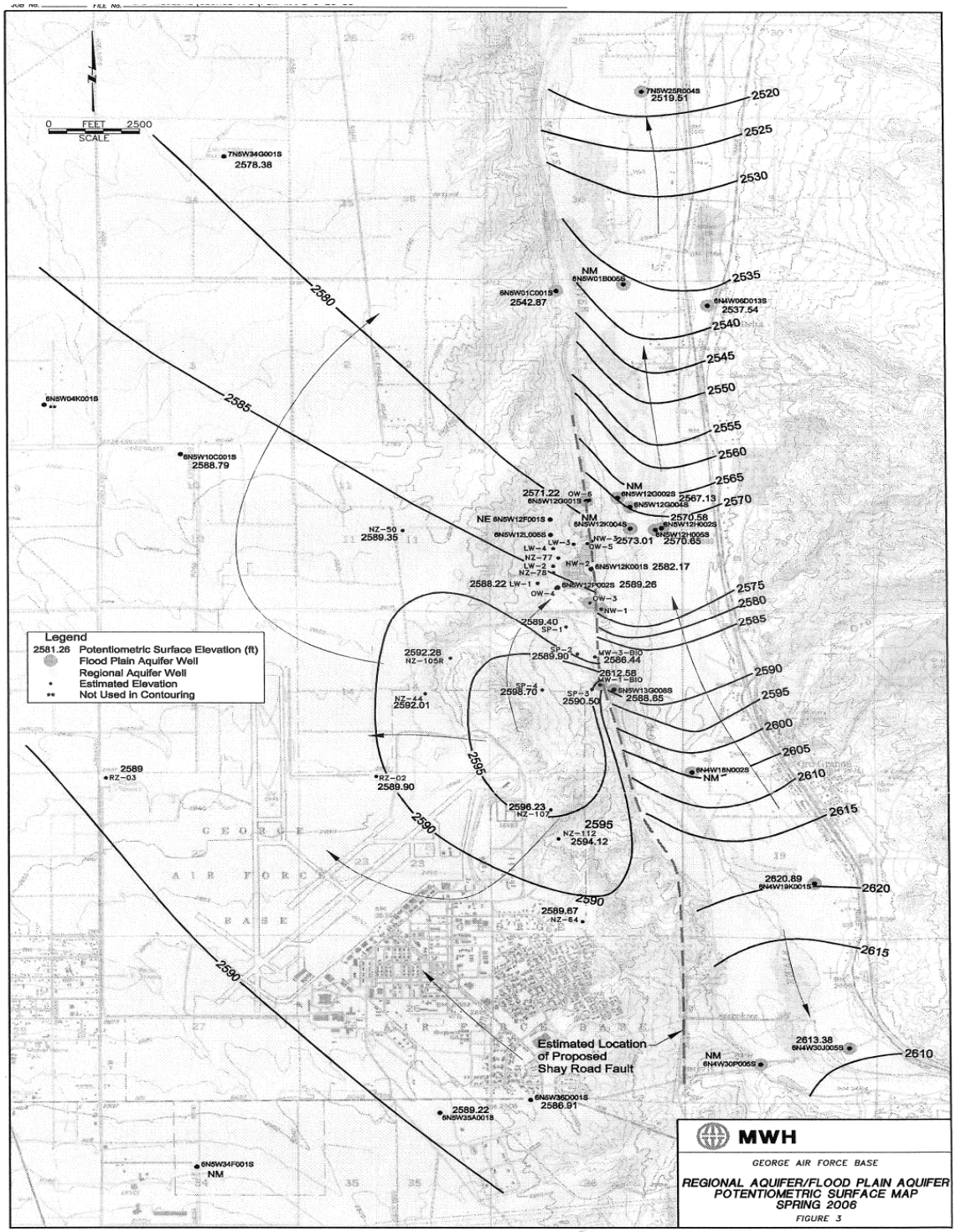

Figure 4.5-5 Potentiometric Surface Map of the Regional & Flood Plain Aquifers – Spring 2006

The RWMP text on "Water Quality" identifies several water quality "issues" that include the following potential contaminants: arsenic, nitrates, iron, manganese, Chromium VI, total dissolved solids (TDS), total petroleum hydrocarbons (TPH), and volatile organic compounds (VOC). A final water quality issue identified in the RWMP is the accumulation of salt in the groundwater basins because, as closed basins, "the salt contained in imported reclaimed wastewater and State Water Project supplies are mostly not removed from the basin.

As noted at a very general level, certain water quality parameters are characterized in the RWMP. These are shown on the following figures, Figure 4.5-6 (Figure 4-14 of the RWMP) to Figure 4.5-11 (Figure 4-19 of the RWMP). Utilization of a single value to characterize the water quality of a whole subbasin is problematic, but it does provide a general background value for comparison with other data in the record. For Total Dissolved Solids (TDS) the background value for the Alto Subbasin is estimated to be approximately 281 parts per million (ppm), as shown on Figure 4.5-6. This TDS concentration is well below the primary drinking water quality standard of 500 ppm established by the California Department of Public Health (DPH).

Figure 4.5-7 identifies a nitrate concentration in the Alto Subbasin groundwater of approximately 0.77 ppm. This value is less than 1/10 of the DPH water quality standard of 10 ppm. Figure 4.5-8 identifies the manganese concentration in the Alto Subbasin groundwater as 0.003 ppm and a DPH water quality standard of 0.05 ppm. This value is less than 1/10 of the DPH water quality standard of 0.05 ppm. Figure 4.5-9 identifies the iron concentration in the Alto Subbasin groundwater as 0.03 ppm and a DPH water quality standard of 0.3 ppm. This value is about 1/10 of the DPH water quality standard.

Figure 4.5-10 identifies a fluoride concentration in the Alto Subbasin groundwater of approximately 0.50 ppm. This value is about ¼ of the DPH water quality standard of 2.0 ppm. Figure 4.5-11 identifies the arsenic concentration in the Alto Subbasin groundwater as about 0.01 ppm. This value is about equal to the federal EPA water quality standard of 0.01. As indicated in the discussion above, arsenic concentrations are very close to the current water quality standard and this is reflected in the necessity to install arsenic treatment units at many wells in the basin to reduce the arsenic concentration in potable water delivered to the customers.

To assess groundwater degradation associated with the discharge of tertiary effluent from the three proposed Subregional WRPs (Hesperia, Apple Valley, and Eastside) to percolation ponds associated with these facilities, it was assumed the discharge would enter the upper groundwater aquifer of the basin in the same manner as the current percolation pond discharges from the Westside Regional WRP. However, there is insufficient data to statistically estimate background quality of the groundwater in the vicinities of the proposed Subregional WRP percolation ponds in the manner described in the CIA for the Westside Regional WRP. In addition the groundwater gradients in the area are very complex, as indicated by the groundwater elevation contours in the upper aquifer shown in Figure 4.5-6. The complexity of the groundwater gradients makes identification of background wells problematic. Only a general estimate of ambient or background quality in terms of nitrate and TDS can be made based on limited historical data from the upper aquifer in the Victor Valley urban area. Consequently, assessment of potential impacts on groundwater quality associated with discharges to percolation ponds at the three proposed Subregional WRPs is based on observed impacts from past percolation pond discharges at the Westside Regional WRP and comparisons of expected

effluent quality from the proposed Subregional WRPs with observed ambient groundwater quality of the upper aquifer in the general vicinity where available.

In addition to the general water quality data for the Alto Basin, the CIA contains a more detailed examination of specific water quality parameters of groundwater in the vicinity of the proposed percolation basins. Even after extensive research the team at Larry Walker and Associates was unable to find certain groundwater quality data. It is important to understand that the percolation basins are the last option for use of the recycled water generated by the Subregional WRPs. In other words fully disinfected recycled water from the WRPs will first be used for consumptive purposes, primarily landscape irrigation. Any excess flows will be disposed of at the percolation basins in Apple Valley or in Hesperia. VVWRA is proposing this method of recycled water disposal, which is not direct recharge to the groundwater aquifer. Regardless, the following summary of water quality information is abstracted from Section 5.3 of the CIA, "Subregional WRPs Groundwater Quality Impacts." Note that the following section focuses only on the existing environmental setting, not the impact analysis which is provided under the Project Impact evaluation.

To assess groundwater degradation associated with the discharge of tertiary effluent from the three proposed Subregional WRPs (Hesperia, Apple Valley, and Eastside) to percolation ponds associated with these facilities, it was assumed the discharge would enter the upper groundwater aquifer of the basin in the same manner as the current percolation pond discharges from the Westside Regional WRP. However, there are insufficient data to statistically estimate background quality of the groundwater in the vicinities of the proposed Subregional WRP percolation ponds in the manner described in the CIA for the Westside Regional WRP. In addition the groundwater gradients in the area are very complex, as indicated by the groundwater elevation contours in the upper aquifer shown in 4.5-6. The complexity of the groundwater gradients makes identification of background wells problematic. Only a general estimate of ambient or background quality in terms of nitrate and TDS can be made based on limited historical data from the upper aquifer in the Victor Valley urban area. Consequently, assessment of potential impacts on groundwater quality associated with discharges to percolation ponds at the three proposed Subregional WRPs is based on observed impacts from past percolation pond discharges at the Westside Regional WRP and comparisons of expected effluent quality from the proposed Subregional WRPs with observed ambient groundwater quality of the upper aquifer in the general vicinity where available.

pH

Data Availability
No background pH data were available from the groundwater in the vicinities of the proposed Subregional WRPs.

Total Suspended Solids

Data Availability
No background TSS data was available from the groundwater in the vicinities of the proposed Subregional WRPs.

Total Dissolved Solids

Data Availability
Contours of TDS concentrations in the upper aquifer of the Mojave River groundwater basin are shown in Figure 4.5-13. These contours were developed using monitoring results from 139 individual wells for samples collected between 1978 and 2009.

Chloride

Data Availability
No background chloride data were available from the groundwater in the vicinities of the proposed Subregional WRPs.

MBAS

Data Availability
No background MBAS data was available from the groundwater in the vicinities of the proposed Subregional WRPs.

Total Nitrogen

Data Availability
No background total nitrogen data were available from the groundwater in the vicinities of the proposed Subregional WRPs.

Nitrate-N

Data Availability
Contours of nitrate concentrations in the upper aquifer of the Mojave River groundwater basin are shown in Figure 4.5-14. These contours were developed using monitoring results from 54 individual wells for samples collected between 1988 and 2009.

Arsenic

Data Availability
No background arsenic data were available from the groundwater in the vicinities of the proposed Subregional WRPs.

Copper

Data Availability
No background total copper data were available from the groundwater in the vicinities of the proposed Subregional WRPs.

Zinc

Data Availability
No background total zinc data were available from the groundwater in the vicinities of the proposed Subregional WRPs.

Cyanide

Data Availability
No background cyanide data were available from the groundwater in the vicinities of the proposed Subregional WRPs.

Bis(2-ethyl)phthalate

Data Availability
No background bis(2-ethyl)phthalate data were available from the groundwater in the vicinities of the proposed Subregional WRPs.

Total Trihalomethanes

Data Availability
No background total THMs data were available from the groundwater in the vicinities of the proposed Subregional WRPs.

Constituents of Emerging Concern

Constituents, or chemicals, of emerging concern (CECs) in the proposed Subregional WRP effluent are also of interest. This section includes a discussion of available information pertaining to CECs and wastewater effluent. CECs generally include pharmaceuticals, and the components of personal care products such as the fragrances used in soap. These products can be of concern because some studies have shown that a subset of these CECs may be endocrine disruptors (EDCs), and can cause other health problems in humans and wildlife. The term CEC can also be used more broadly to encompass many constituents that are not currently regulated or well understood, but are potentially a risk to humans and wildlife. By definition there is limited information about CECs, but they are found in wastewater and drinking water in trace levels (e.g., ng/L or parts per trillion). There is some disagreement about whether these CECs at such low levels can have negative effects on humans.

CECs enter wastewater through pharmaceuticals, personal care products, and cleaning supplies flushed down the drain. Pharmaceuticals and personal care products can also be ingested and/or absorbed and subsequently excreted by humans. Finally CECs may be introduced into wastewater through improper commercial disposal methods.

Data Availability
Data is not available from the projected effluent of the proposed Subregional WRPs themselves; however relevant literature has been researched and described below. A 2009 study by the Water Environment Research Foundation (WERF), "Contributions of Household Chemicals to Sewage and Their Relevance to Municipal Wastewater Systems and the Environment" (Drewes

et al., 2009), tested the concentration of a subset of CECs in six WWTPs' influent and effluent. Out of 26 chemicals targeted in this study, 20 were consistently found in influent. Notably, flame retardant chemicals, which are believed to be EDCs, were not detected. Those chemicals detected were those found in skin care and nail care products, antibacterial soap, lotion, cosmetics, and fragrances as well as herbicides and pesticides. Single compound chemicals present in these products were found on average in influent on the order of µg/L and treatment reduced them by an order of magnitude. Compound mixtures present in these products were found on average in influent on the order of ng/L and showed inconsistent removal. The six WWTPs' studied had various treatment processes ranging from secondary nitrification/denitrification, tertiary filtration, and chlorination to facilities with membrane bioreactors, ozonation, and advanced oxidation processes.

A 2007 study by WERF, "Fate of Pharmaceuticals and Personal Care Products through Municipal Wastewater Treatment" (Stephenson and Oppenheimer, 2007), assessed removal through biological activated sludge processes. Samples were analyzed for chemicals in fragrances, sunscreen, pharmaceuticals, soaps, fire retardants, antioxidants, insect repellent, and a plasticizer. Based on samples taken at six WWTPs, the majority of CECs were present in more than 75% of influent samples. Most CECs also had a median percent removal greater than 80%. Fire retardants were observed infrequently, but they had a median percent removal of less than 50%.

A 2010 study by the National Water Research Institute (NWRI), "Source, Fate, and Transport of Endocrine Disruptors, Pharmaceuticals, and Personal Care Products in Drinking Water Sources in California" (Guo et al., 2010), tested for CECs in three drinking water sources in Southern California: State Water Project, Colorado River water, and Santa Ana River water. Out of 49 CECs tested for, 27 were found in at least one of the water sources. These included many of the same CECs measured in the two studies previously discussed.

The State Water Resources Control Board (SWRCB) released a draft document "Monitoring Strategies for Chemicals of Emerging Concern (CECs) in Recycled Water" in April 2010. The report states that a Science Advisory Panel discussed the impacts of surface spreading of recycled water after secondary treatment and determined that:

> *Due to the depth of groundwater where surface spreading is practiced, recycled water used in groundwater recharge operations does not ex-filtrate into lakes, reservoirs or streams located downstream of a recharge facility. Thus the Panel felt that the potential exposure to humans or aquatic life to CECs in recharged recycled water in surface water sources downstream of the recharge basins is considered negligible.*

However, the Panel noted that due to the ubiquitous occurrence of CECs, groundwater may contain CECs from other source.

The Panel also assessed the possible risks of recycled water and found that "recent studies of recycled water find, essentially, no adverse health outcomes in populations using recycled water."

Groundwater Interactions

Groundwater Flow Velocities

Estimation of groundwater flow velocities in the vicinity of the Subregional WRPs are presented below. The estimate of groundwater flow velocity is focused on the regional aquifer system and uses the equation:

$$V = \frac{K}{ne}\left(\frac{dh}{dl}\right)$$

V is the groundwater flow velocity through a porous media with an effective porosity, ne. Effective porosity is similar to the specific yield of the porous media. K is the hydraulic conductivity in length divided by time units. The final variable in the equation is the groundwater flow gradient or hydraulic gradient specified by the change in groundwater head in feet, dh, over length in feet, dl. Hydraulic gradients were estimated from spring 2008 contours of equal groundwater elevations of the Victor Valley (Figure 4.5-12). The hydraulic gradient values vary between each proposed Subregional WRP. The hydraulic gradients are 0.0152 feet per foot for the Apple Valley percolation pond sites and approximately 0.0038 feet per foot for the Hesperia percolation ponds site and the Eastside Subregional WRP site.

For purposes of estimating groundwater flow velocities in the above equation, an effective porosity of 0.15 was used. This value is typical for sandy aquifer materials that commonly comprise the portions of the regional aquifer that are targeted by wells in the area. The hydraulic conductivity value that was used in the equation was derived from an average of several values that have been calculated from pump tests and reported in the February 2010 Draft Groundwater Conceptual Site Model for the former George Air Force Base (MWH, 2010). The calculated values range from 0.06 to 103.4 feet per day. A value of 40 feet per day was used in the groundwater flow velocity calculations.

Using the values presented above, the estimated groundwater flow velocities in the Spring 2008 period are approximately 4 ft/day at the Apple Valley Subregional WRP percolation pond sites and approximately 1 ft/day at the Hesperia percolation ponds site and in the vicinity of the Eastside Subregional WRP. These rates are estimated based on assumptions that stem from regional data. Future site-specific data can be used to further refine these estimates.

The depth to groundwater based on the groundwater contours shown on Figure 4.5-12 and the land surface contours shown on the USGS 7.5 Minute Topographic Map for each project area. The Apple Valley Subregional WRP site is located at approximately 2810 feet above average mean sea level (amsl) or about 160 feet above the groundwater table. The Alternative 1 Percolation site is located at approximately elevation 2820 feet amsl, or about 170 feet above the groundwater table, and the Alternative 2 Percolation site is located at approximately 2840 feet amsl, or about 190 feet above the groundwater table.

The Alternative 1 Hesperia Subregional WRP site is located at an elevation of approximately 3460 feet amsl. The groundwater table is estimated to be at an elevation of about 2850 feet amsl, or about 610 feet below the ground surface. The Alternative 2 Hesperia Subregional WRP site is located at an elevation of approximately 3320 feet amsl. The groundwater table at this location is estimated to be at an elevation of about 2800 feet amsl or about 520 feet below the ground surface. Finally, the proposed Hesperia percolation pond site is located at an

elevation of about 3030 feet amsl and the local groundwater table is estimated to be at approximately 2750 feet amsl, or about 280 feet below the ground surface.

4.5.2.4 Surface Water Resources Subregional WRP Sites

Surface Flows at the Subregional WRP and Support Facility Sites

Apple Valley Subregional WRP Site

This WRP site is located on an essentially flat portion of Brewster Park. There are no stream channels (natural locations of concentrated surface flow) in the vicinity of the WRP site and surface flow occurs as sheet flow on the site which is then delivered to the local street section. As far as is known, the surface flows are not treated prior to release from the Park to the street section.

Brewster Park is located within the northwest portion of Apple Valley Dry Lake. Figures 4.5-15 and 4-5-16 provide the Federal Emergency Management Agency (FEMA) Flood Insurance Rate Map (FIRM) panels for the project area. The proposed Apple Valley Subregional WRP site is located within Brewster Park, i.e., within Zone A, an area exposed to the 100-year flood hazards at Apple Valley Dry Lake.

The Alternative 1 Percolation Basin site is also essentially flat. There are no stream channels across this Percolation Basin site and surface flow occurs as sheet flow on the site to the south towards Apple Valley Dry Lake. There are no local drainage facilities, and as far as is known, the surface flows from this Percolation Basin site are not treated in any manner.

The Alternative 1 Percolation Basin site is shown on Figure 4.5-16. This site is not located within a 100-year flood hazard zone. It is located within Zone D and it is not exposed to any significant flood hazards based on a review of this FEMA FIRM panel.

The Alternative 2 Percolation Basin site is essentially flat. There are no stream channels across this Percolation Basin site and surface flow occurs as sheet flow on the site to the south towards Apple Valley Dry Lake. There are no local drainage facilities, and as far as is known, the surface flows from this Percolation Basin site are not treated in any manner.

The Alternative 2 Percolation Basin site is not shown on any available FEMA FIRM panel, but according to personal communication with the County Flood Control District this Percolation Basin site is also located in Zone D. Based on the existing data, this site is not exposed to any significant flood hazards.

The Alternative 1 Hesperia Subregional WRP site is located on the eastern edge of Oro Grande Wash. The site is relatively flat. There are no stream channels across this WRP site and surface flow occurs as sheet flow on the site to the west toward the small channel at the bottom of Oro Grande Wash. There are no local drainage facilities, and as far as is known, the surface flows from this WRP site are not treated in any manner.

The Alternative 1 Hesperia Subregional WRP site is not shown on any available FEMA FIRM panel, but according to personal communication with the County Flood Control District this WRP

Basin site is also located in Zone D. Based on the existing data, this site is not exposed to any significant flood hazards.

The Alternative 2 Hesperia Subregional WRP site is located on a site that is essentially flat. There are no stream channels across this WRP site and any surface flow occurs a sheet flow on the site to the northeast where it ultimately flows into the paved road section of Maple Street. These flows are then conveyed east on Mojave and ultimately into the City's drainage system. As far as is known, the surface flows from this WRP site are not treated in any manner. The proposed lift station is located on the south side of Mojave Street about ¼ mile east of the Hesperia Subregional WRP site. The same set of surface hydrology conditions affect both sites.

The Alternative 2 Hesperia Subregional WRP site is shown on Figure 4.5-17, the FEMA FIRM panel for the project area. This WRP site is not exposed to any significant flood hazards based on a review of Figure 4.5-17. The

The Hesperia Subregional WRP Percolation Basin site is essentially flat. There are no stream channels across this Percolation Basin site and surface flow occurs as sheet flow on the site to the northeast where it intercepts the local roadway drainage system. As far as is known, the surface flows from this Percolation Basin site are not treated in any manner.

The Hesperia Percolation Basin site is shown on Figure 4.5-18, the FEMA FIRM panel for the project area. This Percolation Basin site is not exposed to any significant flood hazards based on a review of Figure 4.5-18.

In summary, the only site exposed to 100-year flood hazards is the Apple Valley Subregional WRP site at Brewster Park. All other sites are not exposed to significant flood hazards and none of the project sites are crossed by any natural stream channels, or man-made flood control facilities. All sites, except possibly the Alternative 1 Subregional Hesperia WRP site, are essentially flat and any surface flows consist of sheet flow across the sites. The Alternative 1 Hesperia WRP site may have a limited slope to the west towards Oro Grande Wash. Most of the sites discharge surface flows across shallow desert slopes without any current treatment of the surface runoff and the discharge is typically captured in a downstream street section which then transports the runoff to the regional drainage facilities. Again, the Alternative 1 Hesperia WRP site appears to be an exception.

According to the City of Hesperia General Plan, none of the Hesperia Subregional WRP facilities are exposed to any dam inundation hazards, mudflow hazards or seiche or tsunami hazards. According to the Town of Apple Valley General Plan, none of the Apple Valley Subregional WRP facilities are exposed to these same types of hazards. The Town General Plan does identify the 100-year flood hazard area for the WRP site, but as indicated below the Apple Valley WRP will be protected from the 100-year flood hazard.

4.5.3 Project Impacts

4.5.3.1 Significance Criteria

The following hydrology and water quality issues were carried over to the EIR from the Initial Study and are the proposed thresholds for assessing and determining significant drainage or water quality impacts from implementing the proposed project.

Would the proposed project:

a. Violate any water quality standards or waste discharge requirements?

b. Substantially deplete groundwater supplies or interfere substantially with groundwater recharge such that there would be a net deficit in aquifer volume or a lowering of the local groundwater table level (e.g., the production rate of pre-existing nearby wells would drop to a level which would not support existing land uses or planned uses for which permits have been granted)?

c. Substantially alter the existing drainage pattern of the site or area, including through the alteration of the course of a stream or river, in a manner which would result in substantial erosion or siltation onsite or offsite?

d. Substantially alter the existing drainage pattern of the site or area, including through the alteration of the course of a stream or river, or substantially increase the rate or amount of surface runoff in a manner which would result in flooding onsite or offsite?

e. Create or contribute runoff water which would exceed the capacity of existing or planned stormwater drainage systems or provide substantial additional sources of polluted runoff, such as from areas of material storage, vehicle or equipment maintenance (including washing or detailing), waste handling, hazardous materials handling or storage, delivery areas, loading docks, or other outdoor areas?

f. Otherwise substantially degrade water quality?

g. Place housing within a 100-year flood hazard area as mapped on a federal Flood Hazard Boundary or Flood Insurance Rate Map or other flood hazard delineation map?

h. Place within a 100-year flood hazard area structures which would impede or redirect flood flows?

i. Expose people or structures to significant risk of loss, injury or death involving flooding, including flooding as a result of the failure of a levee or dam?

j. Inundation by seiche, tsunami, or mudflow?

The following issues were identified in the Utilities/Service System category of the Initial Study as having potentially significant impacts and have been carried forward into this DEIR for review and analysis.

Exceed wastewater treatment requirements of the applicable Regional Water Quality Control Board?

Require or result in the construction of new water or wastewater treatment facilities or expansion of existing facilities, the construction of which could cause significant environmental effects?

Because these issues are so closely related to the Hydrology/Water Quality evaluation contained in this Subchapter, the Utilities/Service System issues quoted above have been integrated into this subchapter, and they are proposed as thresholds for assessing and determining the potential impacts of the proposed project.

In addition to the broad scope threshold criteria summarized above, several specific questions posed in comments received in response to the Notice of Preparation will be addressed in this Subchapter. These comments were referenced in the Introduction (Section 4.5.1) and the actual comment letters are provided in Appendix 8.2 for those persons interested in reviewing the detailed comments from the Regional Board and Apple Valley Ranchos Water Company.

Larry Walker Associates (LWA) prepared the "Cumulative Impact Analysis" that evaluates most of the potential impacts that may result from implementing the proposed Subregional WRPs. As indicated in Section 4.5.1, adequate data is abstracted from the LWA report to create a chain of logic for the reviewer to follow and understand the potential hydrology and water quality effects of implementing the proposed project. The actual text brought forward from the LWA report is presented in the following analyses in italics to distinguish it from separate analyses in this DEIR. A copy of the full LWA CIA report is provided in the technical appendices for those reviewers that wish to examine the more detailed water resource/hydrology information. The figure and table numbers in the cited LWA text have been revised to conform to the DEIR sequence of presentation.

4.5.3.2 Project Impact Analysis

a. Violate any water quality standards or waste discharge requirements?

Based on the Initial Study and the comments received on the Notice of Preparation, there are two key water issues that must be addressed in order to consider implementation of the VVWRA's Subregional WRP project. The first issue requiring evaluation and resolution is whether the proposed Subregional WRPs can be installed and operated and not violate any water quality standards or waste discharge requirements? This issue can be analyzed from two perspectives: water quality antidegradation requirements relative to the adopted Lahontan Regional Water Quality Board's "Basin Plan"; and potential effects on groundwater quality and potable water supply within the Alto Subbasin. The second issue that must be addressed is the proposed project's potential effects on water resources (supply) downstream of VVWRA's Westside Regional WRP. Although the issue of water quality downstream of the Westside WRP is of concern, it is being addressed by VVWRA under a separate process with the Lahontan Regional Board. Therefore, water quality downstream of the Westside WRP discharge point is not evaluated in this DEIR. Note, however, that the CIA provided in the Technical Appendices does address this issue in substantial detail and the reader can review the materials in that document if desired.

This section of the DEIR focuses on the water quality issues and the ability of the proposed Subregional WRPs to meet water quality standards or waste discharge requirements. Since these issues were given detailed consideration in the CIA, the following text has been selectively abstracted from the CIA to provide the reader with a comprehensive discussion of the water quality issues and potential water quality impacts from implementing the Subregional WRPs.

<u>The Proposed Project</u>

VVWRA's approach to both handling wastewater flow and sustaining local water supplies is to strategically locate subregional water reclamation plants. Three Subregional WRPs are

proposed, the Hesperia WRP, the Apple Valley WRP, and the Eastside WRP. These WRPs represent the first step in preparing for the people, businesses, and industry that are both the cause and sustainers of regional growth. The WRPs will be scalping facilities, meaning each will treat a portion of the wastewater from its local collection system, reuse the treated water in beneficial manners, and return solids to the sewer for treatment at the Westside Regional WRP. The Subregional WRPs will reduce the overall load on the collection system and the Westside Regional WRP while creating recycled water, which is a valuable and increasingly important resource in this region. Another benefit of locating the Subregional WRPs farther up the watershed is the reduction of recycled water infrastructure and the subsequent energy costs of pumping the recycled water back up grade to the recycled water uses. This is also in keeping with the City of Hesperia Recycled Water Master Plan (Carollo, 2008).

VVWRA has determined that the existing infrastructure, wastewater collection system and treatment facilities will require major expansions in order to convey and treat the wastewater from future growth. A major challenge that faces VVWRA is the limitations on the existing collection system. The existing trunk sewers that convey wastewater from the communities of Apple Valley and Hesperia are currently constrained and cannot accommodate future growth. The Subregional WRPs allow VVWRA to address the backbone collection system limitations without constructing miles of new trunk sewers to the Westside Regional WRP. Trunk sewer capacity and planning concepts of the Subregional WRPs is discussed further in the report - Planning and Environmental Services to Develop Subregional Reclamation Facilities (Boyle, 2005).

The water supply in the High Desert is primarily groundwater and this resource is in an overdraft condition. The Mojave Water Agency also has an entitlement to State Water Project water and has historically not taken its full entitlement. A stipulated judgment (January 1996) requires the Mojave Water Agency to provide "makeup water" in order to achieve a water balance between the subareas. Water reclamation will help to reduce the burden upon the groundwater supply and State Water Project by increasing the efficiency at which the groundwater is used by offsetting some non-potable water demands. Recycled water also tends to be less expensive than potable water and as such provides an economic benefit to the end user of the recycled water. The Mojave Water Agency has identified, in their Regional Water Management Plan Update Phase 1, water recycling by VVWRA as a significant management tool.

The Subregional WRPs will employ membrane bioreactor (MBR) technology to provide a high level of reliability and quality of recycled water. The membrane technology provides a positive barrier that improves the consistency of the recycled water quality as compared to conventional processes such as those used at the Westside Regional WRP. Each WRP has been designed with the local community in mind. The use of MBR technology aids in the overall reduction of the footprint and minimizes the visual impact to the communities. Architecture of the facilities was selected to match the neighboring communities and presented at public meetings to allow for public input. A vast majority of equipment will be located within buildings and the main noise culprits, blowers, will be located within concrete basements and noise enclosures to reduce their potential to impact the community. The Subregional WRPs will discharge waste solids back into the collection system for treatment at the Westside Regional WRP, this will eliminate truck traffic and odors that are associated with solids handling. Odor control will be included for the Subregional WRPs in keeping with the overall theme of reducing impacts to the community. The Subregional WRPs have been designed to be good neighbor facilities.

The following is a summary of the WRP facilities. The reviewer is referenced to the detailed Project Description in Chapter 3 for more information about the proposed WRPs.

The first two scalping plants to be developed under this overall reuse goal are the Hesperia and Apple Valley Subregional WRPs. The WRPs will serve as scalping plants in order to deliver a fairly consistent recycled water production of 1.0 million gallons per day (mgd). Both Subregional WRPs will be designed for expansion to 2.0 mgd, while the Hesperia Subregional WRP may be expanded up to 4.0 mgd and the Apple Valley Subregional WRP could be expanded beyond 2.0 mgd in the future. A third Eastside Subregional WRP could also be constructed in the future with a capacity up to 4 mgd….. The overall process selected for this project is the Membrane Bioreactor (MBR) approach to treating wastewater and the Subregional WRPs will be configured as scalping plants (producing the design flows at all times) designed to meet the Title 22 requirements for recycled water. The recycled water will be delivered to off-site percolation basins and used for on-site process and site irrigation or go to other end users that will be determined during the design of the disposal sites. The Subregional WRPs will not discharge to surface water. The percolation basins will be managed to minimize standing water by using wet and dry cycling. The Subregional WRPs will be comprised of the following:

- *Influent lift station (modifications and expansion to existing Otoe Lift Station for Apple Valley, a new off-site Lift Station for Hesperia)*
- *Screening - 2 mm rotary drum screens*
- *Activated sludge process - biological process with flexibility to meet future nitrogen regulations of less than 5 mg/L*
- *Membrane filtration - submerged hollow fiber membrane filtration system*
- *Ultraviolet disinfection - using low pressure high output closed vessel technology to reduce overall energy consumption*
- *Recycled water pump station - Deliver water for off-site and on-site uses*
- *Waste activated sludge - Pumped to downstream section of adjacent collection system.*
- *Headworks odor control - In ground non-proprietary biofilter for treating of foul air from the screening area*

<u>Current and Projected Wastewater Flows Generated in the VVWRA Service Area</u>

The following data regarding current and projected wastewater flows is abstracted from the CIA and reprinted here because it is essential information to a full understanding of the impact forecast presented below.

The Flow Study provided two sets of projections for wastewater flows generated in the VVWRA service area through 2022. One projection was based on a constant 2.76% growth rate, based on the 20-year average flow increase for four Southern California communities of similar size. A second approach, based on factors specific to VVWRA, projected a lower growth rate of less than 2% in the short-term, followed by more aggressive rates of over 3% in the long-term. Flow projections from the 2009 to 2022 are summarized in Table 4.5-1*4.5-1 below. The Flow Study was undertaken in 2009 and flows for that year were part of the Study's projections; since then, the actual average flow for 2009 was observed at 12.49 MGD, a value within 1% of the Flow Study projections for this period.*

Table 4.5-1. Projected VVWRA Service Area Flows, from April 2009 Update to the Flow Study

	Service Area Flows based on 20-year average growth rate in 4 So. Cal. Communities		Service Area Flows based on economic factors specific to VVWRA area	
Year	**% increase**	**MGD**	**% increase**	**MGD**
2009	2.76%	12.60	1.6%	12.46
2010	2.76%	12.95	1.5%	12.65
2011	2.76%	13.30	5.2%	13.34
2012	2.76%	13.67	4.9%	14.03
2013	2.76%	14.05	4.7%	14.72
2014	2.76%	14.44	4.5%	15.40
2015	2.76%	14.84	4.3%	16.09
2016	2.76%	15.25	4.1%	16.78
2017	2.76%	15.67	3.8%	17.45
2018	2.76%	16.10	3.7%	18.11
2019	2.76%	16.55	3.6%	18.78
2020	2.76%	17.01	3.4%	19.45
2021	2.76%	17.48	3.3%	20.12
2022	2.76%	17.96	3.2%	20.79

As seen in Table 4.5-1, the approach based on a constant 2.76% increase projects a lower flow scenario. Besides being the more conservative of the two scenarios, this projection is also preferred given the observed decrease in service area flow during the economic environment in recent years.

Under current conditions, most of the effluent flow from the Westside Regional WRP is discharged to the Mojave River or to percolation ponds on site, with a small portion being used for irrigation on the grounds of the treatment plant and at the nearby Westwinds Golf Course. Under a June 2003 Memorandum of Understanding (MOU) with the California Department of Fish and Game (DFG), VVWRA is required to discharge a minimum daily effluent volume from the Westside Regional WRP. The minimum flow volume required for discharge is the equivalent of 9,000 ac-ft/year (approximately 8.05 mgd) plus 20% of any flow increases over the 2003 average dry weather flow (ADWF) levels, minus any volumes sent to the Westwinds Golf Course or used for on-site irrigation at the Westside Regional WRP.

VVWRA is proposing to build two Subregional WRPs in the communities of Apple Valley and Hesperia. The wastewater would be treated to meet Title 22 standards and the recycled water produced from the two proposed WRPs could be used for landscape irrigation, industrial operations, and recharge to the regional groundwater aquifer in the Alto Sub-basin of the Mojave River Basin. Based on the proposed timeline for construction, the Subregional WRPs will become operational in 2014 and have an initial capacity of 1 MGD each. The design of the Subregional WRPs would allow for future expansion to 2 MGD per plant, if the projected growth rates continue and there is a sustained demand for recycled water in the future. Upon construction of the Subregional WRPs expected to begin operating in 2014, VVWRA will continue to honor the DFG MOU and only reclaim flows in excess of the MOU discharge requirements. Table 4.5- presents current available discharge flows (from the time of the DFG agreement in 2003, to the most recent available in 2009) and future projected flows, including under proposed discharge conditions following construction of the Subregional WRPs in 2014. Projected effluent flows for 2010 to 2022 are based on a 2.76% growth factor, the lower, more

conservative scenario derived in the Flow Study (Table 4.5-1). Flows to the Westwinds Golf Course are estimated as the average volumes for the past four years from 2006, when VVWRA began supplying recycled water to the golf course, to 2009, the most recent year with available data. The analysis does not account for on-site use at the treatment plant since, at an average 50,000 gpd, this flow is considered negligible.

Table 4.5-2. Distribution of VVWRA Discharge Flows (mgd) under Current and Proposed Conditions

	Effluent Flow	Increase in Flows >2003 Baseline	20% of Increase in Flows >2003 Baseline	Flows to Westwinds Golf Course	Minimum Required Discharge per DFG MOU	Flow Re-distributed to Proposed WRPs	Excess Flows Available for Discharge	Total Flows Available for Westside Discharge
2003	9.35	NA	NA		8.05		1.3	9.35
2004	10.6	1.25	0.25		8.30		2.3	10.60
2005	12.03	2.68	0.54		8.59		3.4	12.03
2006	12.32[(1)]	2.97	0.59	0.29	8.35		4.0	12.32
2007	12.43	3.08	0.62	0.27	8.40		4.0	12.43
2008	12.3	2.95	0.59	0.31	8.33		4.0	12.30
2009	12.07	2.72	0.54	0.34	8.25		3.8	12.07
2010	12.40	3.05	0.61	0.30	8.36		4.0	12.40
2011	12.75	3.40	0.68	0.30	8.43		4.3	12.75
2012	13.10	3.75	0.75	0.30	8.50		4.6	13.10
2013	13.46	4.11	0.82	0.30	8.57		4.9	13.46
2014	13.83	4.48	0.90	0.30	8.64	2.00	3.2	11.83
2015	14.21	4.86	0.97	0.30	8.72	2.00	3.5	12.21
2016	14.60	5.25	1.05	0.30	8.80	2.00	3.8	12.60
2017	15.01	5.66	1.13	0.30	8.88	2.00	4.1	13.01
2018	15.42	6.07	1.21	0.30	8.96	2.00	4.5	13.42
2019	15.85	6.50	1.30	0.30	9.05	2.00	4.8	13.85
2020	16.28	6.93	1.39	0.30	9.13	2.00	5.2	14.28
2021	16.73	7.38	1.48	0.30	9.22	2.00	5.5	14.73
2022	17.20	7.85	1.57	0.30	9.32	2.00	5.9	15.20

[(1)] Based on influent data

As noted above and presented in Table 4.5-, starting in 2014, 2 MGD of wastewater from the Westside Regional WRP will be redistributed to the Subregional WRPs. The flow redistribution will not prevent VVWRA from discharging the required volume at the Westside Regional WRP per the DFG MOU. The volume discharged at the Westside Regional WRP in excess of the DFG MOU requirements is just under 4 mgd as of 2009 (the last full year of available data), as presented in Table 4.5-. The excess volume discharged at the Westside Regional WRP is projected to increase in the coming years as VVWRA's service area flows increase with population growth. When the Subregional WRPs are projected to come online in 2014, the excess flows discharged at the Westside Regional WRP will drop by just over 0.5 mgd compared to 2009 volumes. Volumes in excess of the MOU requirements discharged at the Westside Regional WRP are projected to return to 2009 values only two years following the onset of discharge from the Subregional WRPs, and excess volume discharged at the Westside Regional WRP is projected to surpass 2009 volumes for all subsequent years, even with the Subregional WRPs online. Furthermore, the total volume discharged at the Westside Regional WRP is projected to increase in the coming years. The total flow discharged at the Westside Regional WRP in 2009 was just over 12 mgd. Following the construction of the Subregional

WRPs, the total volume discharged at the Westside Regional WRP will drop to just under 12 mgd for one year, then is projected to increase above 2009 volumes the following year. The data in Table 4.5-2 is presented graphically in Figure 4.5-19.

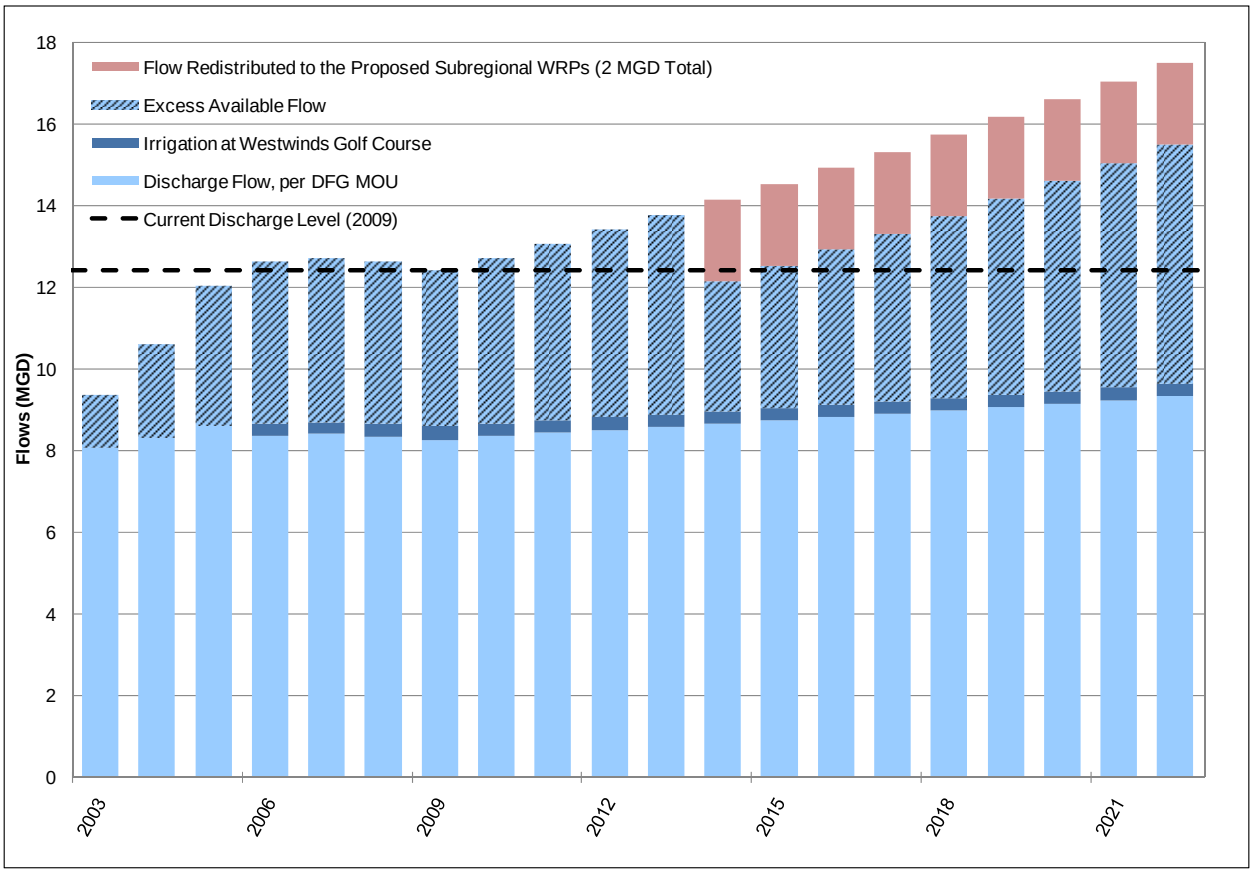

Figure 4.5-19. Distribution of Flow Volumes Received by VVWRA

Wastewater agencies contribute to potable water supply by using treated effluent for groundwater recharge in the Mojave Basin. VVWRA delivers treated wastewater to the Mojave River downstream of the Lower Narrows, which is credited toward the required transfer of water between the Alto Subarea and the Centro Subarea. VVWRA began transferring treated wastewater to the Centro subarea in 1985-1986 and has steadily increased its transfer from roughly 5,000 acre-feet per year to over 13,000 acre-feet in 2007-2008. VVWRA also supplies non-potable recycled water within its service area for golf course irrigation, which reduces potable water demands for irrigation…..

VVWRA Subregional Facilities can potentially produce 8 MGD of recycled water. This amounts to 8,960 acre-ft per year that could be reduced from the amount of water pumped from the groundwater basin, which, as previously mentioned, has been steadily declining. In monetary terms, if the amount of recycled water produced by the Subregional Facilities were used to reduce the amount of replacement water that is purchased in the Alto subarea, the 8,960 acre-ft

could save the Alto subarea more than $4M with 2009/2010 replacement water projected to cost as much as $464 per acre-ft.

Note that any recycled water used within the Alto Subbasin will offset the need to pump groundwater by a comparable amount. Thus, to the extent that recycled water is used to offset consumptive uses, such landscape irrigation or other uses that do not generate wastewater, it benefits groundwater resources both through the reduction in groundwater pumped from the Alto Subbasin and any percolation of recycled water back into the Subbasin, which can range from a few percent to as high as 50%.

Water Quality Regulations and Standards

Regulations

Federal and State Antidegradation Policies
Antidegradation policies have been adopted at both the Federal and State level. These policies are intended to protect existing water quality.

The Federal policy, originally adopted in 1975, is expressed as a regulation in 40 CFR 131.12. The Federal regulation requires that "water quality shall be maintained and protected". More specifically, the Federal regulation requires the States to develop and adopt a statewide antidegradation policy and identify the methods for implementing such policy. The antidegradation policy and implementation methods shall, at a minimum, be consistent with ensuring that existing water uses and the level of water quality necessary to protect these uses shall be maintained and protected. Where the quality of waters exceed levels necessary to support beneficial uses, measures shall be taken to ensure that water quality is maintained and protected unless the State finds that allowing lower water quality is necessary to accommodate important economic or social development in the area in which the waters are located.

The State policy to maintaining high quality waters in California was adopted in 1968 as a resolution of the State Water Board (Resolution No. 68-16). The State policy requires that changes in water quality not unreasonably affect beneficial uses. The State policy sets forth the following requirements:

1. *Whenever the existing quality of water is better than the quality established in policies as of the date on which such policies become effective, such existing high quality will be maintained until it has been demonstrated to the State that any change will be consistent with maximum benefit to the people of the State, will not unreasonably affect present and anticipated beneficial use of such water and will not result in water quality less than that prescribed in the policies.*
2. *Any activity which produces or may produce a waste or increased volume or concentration of waste and which discharges or proposes to discharge to existing high quality waters will be required to meet waste discharge requirements which will result in the best practicable treatment or control of the discharge necessary to assure that (a) a pollution or nuisance will not occur and (b) the highest water quality consistent with maximum benefit to the people of the State will be maintained.*

State Guidance on NPDES Permitting and Antidegradation

In addition to the Federal and State policies, the State Water Board issued guidance to all Regional Boards regarding the implementation of antidegradation policies in NPDES permits (APU 90-04). The guidance addresses both the State and Federal antidegradation policies in the issuance of NPDES permits. By using this guidance, a Regional Water Board can better determine if the proposed discharge is consistent with the intent and purpose of the State and Federal antidegradation policies. APU 90-04 provides the Regional Water Board with guidance on the appropriate level of analysis that may be necessary, distinguishing between the need for a simple antidegradation analysis and a complete antidegradation analysis. It if is determined that a simple analysis is not appropriate, the State Water Board guidance describes a more rigorous level of analysis, called a "complete" analysis. A primary focus of the "complete" analysis is the determination of whether and the degree to which water quality is lowered. This determination greatly influences the level of analysis required and the level of scrutiny applied to the "balancing" test- i.e. whether the facility is necessary to accommodate important economic and social development, and whether a water quality change is consistent with maximum benefit to the people of the State.

Factors to be considered in determining whether a project is necessary to accommodate important economic or social development and is consistent with maximum public benefit are:

- *Past, present and probable beneficial uses.*
- *Economic costs to maintain water quality compared to the benefits.*
- *Environmental aspects of the proposed discharge.*
- *Consideration of feasible alternative control measures which might reduce, eliminate or compensate for negative impacts of the project.*

A simple antidegradation analysis is sufficient if the project will produce minor effects which will not result in a significant reduction of water quality. A complete analysis is required if the proposed project will result in a significant increase in pollutant concentrations or loadings.
For a 'complete' antidegradation analysis, APU 90-04 requires the following:

- *Consideration of alternative control measures that might reduce, eliminate, or compensate for the negative impacts of the proposed capacity increase;*
- *Evaluation of each alternative for costs, impacts on the water quality, and compliance with applicable laws, regulations and policies;*
- *An assessment of the socio-economic impacts of each alternative; and*
- *A balancing of the alternatives based on environmental and socio-economic considerations.*
-

VVWRA has chosen to conduct a complete antidegradation analysis.

Groundwater Recharge Regulations using Municipal Recycled Wastewater

Recycled water produced by the Subregional WRPs is not intended for direct recharge or potable water purposes. However, a summary of regulations that apply to direct recharge of recycled water are provided here for reference.

Groundwater recharge using recycled municipal wastewater is currently governed by draft regulations prepared by the California Department of Public Health (CDPH). The draft

regulations were promulgated on August 5, 2008 and are located on the CDPH website1. Recycled municipal wastewater may be used to augment groundwater used as a public drinking water supply, as long as these regulations are followed. Groundwater recharge can occur by surface application (spreading of recycled water to allow infiltration and percolation through an unsaturated zone) or subsurface application (control application of recycled water to a groundwater basin by a means other than surface application). The following paragraphs include information applicable to surface application of recycled water.

Until the groundwater recharge regulations are fully adopted, actual project requirements can be expanded by CDPH to address site specific concerns and current understanding of protective mechanisms. Under a Memorandum of Agreement (MOA) signed in 1996 by CDPH and the State Water Resources Control Board2, the permitting authority is the local Regional Water Quality Control Board (Regional Water Board), but CDPH must review the project conditions, provide technical assistance to the Regional Water Board, and determine if the project will adhere to requirements specified in Title 22, California Code of Regulations.

Municipal Recycled Water Quality
Recycled water used for groundwater recharge must be from an agency that administers an industrial pretreatment program and implements a pollutant source control program. The pollutant source control program must address specific constituents identified by CDPH, conduct outreach to sources of these constituents, and assess the fate of the constituents through the wastewater treatment process. The program must also maintain an inventory of all contaminants in the collection system to readily evaluate new constituents of concern. The municipal recycled water must be treated to "filtered wastewater" and "disinfected tertiary recycled water standards" as defined in Sections 60301.320 and 60301.230, Title 22 California Code of Regulations, Chapter 3 Water Recycling Criteria. During the first year of operation, the agency must provide an alternative domestic water supply or additional, approved treatment mechanism that can be provided if any drinking water standard is violated or is no longer considered a safe source of drinking water.

Project Design and Operation
Project design must be detailed in an Engineering Report, prepared by a qualified engineer licensed in California and approved by CDPH. In addition to project design, the Engineering Report must include how the project will comply with applicable regulations and a contingency plan that assures no inadequately treated water will be delivered to the use area. Every 5 years, the Engineering Report must be updated to address any project changes. Approval of the revised Engineering Report is required by CDPH and the Regional Water Board.

An Operations Plan must be submitted to and approved by CDPH prior to startup. The Operations Plan must describe the operations, maintenance, and monitoring that will be conducted by the agency to ensure compliance with groundwater recharge regulations. Once approved, the Operations Plan must be kept up-to-date at all times to ensure it represents current operating conditions. All treatment processes must be operated to optimize the

1 Groundwater Recharge Reuse DRAFT Regulations (August 5, 2008), Title 22, Chapter 3, proposed Article 5.1 and Article 7, www.cdph.ca.gove/healthinfo/environhealth/water/pages/waterrecycling.aspx.
2 "Memorandum of Agreement between the Department of Health Services and the State Water Resources Control Board on Use of Reclaimed Water," 1996.

reduction of microbial contaminants, regulated contaminants (Section 60320.030), nitrogen compounds (Section 60320.020), and nonregulated contaminants (Section 60320.047).

During each month of operation, the agency must calculate its running monthly average recycled water contribution (RWC) based on the total volume of recycled water and diluent water applied during the preceding 60 calendar months (starting at 30 months of operation). (RWC is the quantity of recycled water applied for groundwater recharge divided by the sum of recycled water applied and diluent water.) An initial maximum RWC is specified by CDPH, determined from the Engineering Report and public hearings. The maximum RWC cannot be more than 0.5 for surface application using reverse osmosis and advanced oxidation treatment or 0.2 for other treatment processes. The maximum RWC may be increased by CDPH and the Regional Water Board if total organic carbon concentrations in the recycled water meet specific conditions, monitored for at least 52 weeks.

Recycled Water Monitoring

To control pathogenic microorganisms, the recycled water must be held underground for a minimum of six months prior to extraction for use as a drinking water supply. To demonstrate that this retention time is being met, a tracer study is required before the end of the third month of operation. Under normal hydraulic operating conditions, a tracer is added to the recycled water and sampling is conducted of the downgradient domestic water supply wells. The time it takes for two percent of the tracer concentration to reach the nearest downgradient domestic water supply well indicates the retention time. Alternative monitoring and retention time assessment methods are outlined in the draft regulations, and can be proposed for approval by CDPH.

To control nitrogen in groundwater, the recycled water must be monitored for total nitrogen. Recycled water in the spreading area must be sampled at least two times per week. If the average of two consecutive samples exceeds 5 mg/L, the cause must be investigated and actions taken to reduce nitrogen levels. If the average of all samples collected during any consecutive 4 weeks exceeds 5 mg/L, the recycled water spreading must be suspended and not resumed until corrective actions are implemented and two consecutive samples are less than 5 mg/L. Alternative methods to assess nitrogen contributions by recycled water and effects on groundwater quality are outlined in the regulations.

To control regulated chemicals and physical characteristics in groundwater, the recycled water must be analyzed quarterly for constituents listed in Table 64431-A (except for nitrogen), radionuclides in Tables 64442 and 64443, organic chemicals in Table 64444-A, lead, and copper. At least once a year, the recycled water must be analyzed for secondary drinking water constituents in Tables 64449-A and 64449-B. If monitoring results exceed the contaminant's MCL or Action Level (for lead or copper), another sample must be collected for confirmation within 72 hours. If a running 4-week average exceeds an acute contaminant's MCL, recycled water application must be suspended. For contaminants with an annual average compliance determination, weekly sampling must be conducted until the running 4-week average no longer exceeds the MCL or Action Level. If the running 4-week average exceeds the MCL or Action Level for 16 weeks, CDPH may require suspension of recycled water application.

In June 2010, the State Water Resources Control Board's Science Advisory Panel issued a report on monitoring for chemicals of emerging concern (CECs) in recycled water. For

groundwater recharge projects, the Panel recommends quarterly monitoring of recycled water for health-based indicators (17b-estradiol, triclosan, caffeine, NDMA) during the first year of operation. Baseline monitoring is recommended at least twice a year for 3 years, but the frequency can be increased or decreased based on monitoring results. Monitoring of performance-based indicators (gemfibrozil, DEET, caffeine, iopromide) and performance-based surrogates (sucralose, ammonia, nitrate, dissolved organic carbon, ultraviolet absorption) are recommended at the same monitoring frequencies to determine treatment process performance. The Panel's recommended monitoring strategies may be incorporated into the Statewide Recycled Water Policy3 at the end of December 2010.

Groundwater Monitoring
Prior to startup, the agency must install monitoring wells at (1) a location where recharge water as been retained in the saturated zone for 1 to 3 months, (2) additional points between the surface application facility and the nearest downgradient domestic water supply well, and (3) a place where samples can be collected independently from each aquifer that receives water from the recharge project.

The agency must collect at least two samples from each monitoring well prior to project startup. The samples must be analyzed for total organic carbon, total nitrogen, nitrate, nitrite, constituents in Table 64449-A and B, total coliform, and any other constituents specified by CDPH. Quarterly sampling for the same constituents is required after project startup.

The State Water Resources Control Board's Science Advisory Panel also recommends monitoring for chemicals of emerging concern (CECs) in groundwater. Groundwater monitoring locations are to be determined on a case-by-case basis by CDPH, but could include downgradient water supply wells, monitoring wells representing underlying groundwater, or lysimeters. As recommended for recycled water monitoring, the Panel suggests quarterly to twice a year monitoring of groundwater for health-based indicators, performance-based indicators, and performance-based surrogates.

Regulatory Reporting
All chemical analyses completed during a calendar month must be submitted electronically to CDPH and the Regional Water Board by the end of the following month. Results exceeding MCLs or total coliform requirements must be reported within 48 hours of being notified of the exceedance. Annual Reports are required for submittal to CDPH and the Regional Water Board. The Annual Reports must detail compliance status, operational changes, groundwater plume migration, and estimated recycled water application during the next year.

Water Quality Standards

Beneficial Uses
The Water Quality Control Plan for the Lahontan Basin (Basin Plan), originally adopted by the Regional Water Board in 1975 and amended regularly, contains descriptions of the legal, technical, and programmatic bases for water quality regulation in the region. The Basin Plan describes the beneficial uses of major surface waters and groundwaters and the corresponding water quality objectives put into effect to protect these beneficial uses.

3 State Water Resources Control Board Resolution No. 2009-0011, "Adoption of a Policy for Water Quality Control for Recycled Water, located at http://www.waterboards.ca.gov/water_issues/programs/water_recycling_policy/index.shtml

Table 4.5-3 presents the existing or potential beneficial uses of the Upper Mojave River Valley Groundwater Basin. This groundwater basin will receive the additional flow discharged to the ponds associated with the expansion of VVWRA's Westside Regional WRP and the ponds associated with the Subregional Facilities.

Table 4.5-3. Designated Beneficial Uses of the Upper Mojave River Groundwater Basin

Code	Beneficial Use
MUN	Municipal and Domestic Supply
AGR	Irrigation and Stock Watering
IND	Industrial Service Supply
FRSH	Freshwater Replenishment
AQUA	Aquaculture

Water Quality Objectives/Water Quality Criteria

To protect the designated beneficial uses, the Regional Board applies numeric water quality objectives contained in the Basin Plan including California Toxics Rule (CTR) criteria for priority toxic pollutants promulgated by EPA on May 18, 2000. CTR water quality criteria are federal criteria legally applicable in California. The Regional Board also applies other sets of recommended water quality criteria to interpret narrative objectives contained in the Basin Plan. For example, the Regional Water Board utilizes the water quality criteria recommended in the Western Fertilizer Handbook to interpret the narrative objective for protection of the agricultural beneficial use. The Regional Water Board uses these objectives and criteria to determine if a discharge will cause or contribute to a violation of any applicable water quality standard.

Table4.5-4 presents the water quality objectives determined necessary to protect the most sensitive beneficial use (MUN) of the Upper Mojave River Valley Groundwater Basin. Constituents of concern identified by the Regional Board are total dissolved solids (TDS), total Trihalomethanes (THMs), and nitrate. These constituents are of concern because the increased discharge from the Westside Regional WRP to the south ponds is most likely to affect the concentrations of these constituents in the groundwater beneath and down-gradient of the ponds. Additional constituents of concern are also included in Table4.5-4.

The Western Fertilizer Handbook (CPHA, 2002) contains recommended TDS criteria for protection of various crops. For alfalfa, the dominant crop grown in the Victor Valley area, the Handbook indicates that crop yield will not be affected if TDS levels are below 845 mg/L. For the most salt-sensitive crop grown in the area, apples, the Handbook indicates that TDS levels of 650 mg/L or below will not affect crop yield.

Table 4.5-4 Applicable Water Quality Objectives and/or Criteria for Constituents of Concern in the Upper Mojave River Groundwater Basin

Constituent	Value / Range	Unit	Reference
pH	NA	Units	----------
TSS	NA	mg/L	----------

Constituent	Value / Range	Unit	Reference
TDS	500 - Recommended 1000 - Upper 1500 - Short Term	mg/L	Title 22 (Secondary MCL)/ Basin Plan(1)
Chloride	250 - Recommended 500 - Upper 600 - Short Term	mg/L	Title 22 (Secondary MCL)/ Basin Plan(1)
MBAS	0.5	mg/L	Title 22 (Secondary MCL)/ Basin Plan(1)
Ammonia-N	NA	mg/L	----------
Total Nitrogen	NA	mg/L	----------
Nitrate-N	10	mg/L	Title 22 (Primary MCL)
Arsenic	0.01	mg/L	Title 22 (Primary MCL)/ Basin Plan(1)
Copper	1000	ug/L	Title 22 (Secondary MCL)/ Basin Plan(1)
Zinc	5000	ug/L	Title 22 (Secondary MCL)/ Basin Plan(1)
Cyanide	150	ug/L	Title 22 (Primary MCL)/ Basin Plan(1)
bis(2-ethylhexyl)phthalate (2)	4	ug/L	Title 22 (Primary MCL)/ Basin Plan(1)
Total THMs	80	ug/L	USEPA Stage 1 Disinfectants and Disinfection Byproducts Rule

NA: No Applicable Objective
(1) Incorporated into the Basin Plan by reference.
(2) Also called di(2-ethylhexyl)phthalate.

Water Quality impacts

Table 4.5-5 shows the water quality of major water suppliers in the VVWRA service area, as well as the expected quality of recycled water produced by the proposed Subregional Faculties. TDS, Nitrate, and THMs are pollutants of concern for groundwater identified by the Regional Board.

Table 4.5-5. Water Quality of VVWRA Recycled Water Compared to Groundwater Supplied by Major Water Agencies in the VVWRA Service Area

Water Source	TDS (mg/L)	Nitrate-N (mg/L)	THMs (ug/L)	Source Data
VVWRA Subregional Facilities	370	5.0	< 1[a]	1
Apple Valley Ranchos Water Company	120 - 960	0.5 – 4.3	3.2 – 8.7	2
City of Hesperia Water District	93 - 208	ND – 4.2	Not given	3
Victorville Water District	108 – 338	0 – 2.5	0 – 4.8	4
San Bernardino County Service Area 42	1,100[b]	0 – 3.4	24.8 – 41.6	5
San Bernardino County Service Area 64	120 - 140	0.7 – 1.1	0	6
Water Quality Goals or Objectives	1,000[c]	10.2[d]	80[e]	4

a. THMs are not expected to be produced in the Subregional Facilities.
b. Only one sample taken.
c. Primary Maximum Contaminant Limit (MCL)
d. Public Health Goal (PHG)
e. Secondary Maximum Contaminant Limit (MCL)
1. Section 4 of this report
2. 2008/2009 Annual Water Quality Report: http://www.avrwater.com/pdf/AVR_WaterQualityEnglish.pdf
3. 2008 Consumer Confidence Report: http://www.cityofhesperia.us/DocumentView.aspx?DID=6000
4. 2008 Consumer Confidence Report: http://ci.victorville.ca.us/uploadedFiles/CCR%20June%2009(1).pdf
5. 2007 Consumer Confidence Report: http://www.specialdistricts.org/2//water/services/ccr/2007/CSA%2042%20CCR%202007.pdf
6. 2007 Consumer Confidence Report: http://www.specialdistricts.org/2//water/services/ccr/2007/CSA%2064%20CCR%202007.pdf

As shown in Table 4.5-5, the expected values of recycled water from the Subregional Facilities meet drinking water standards for TDS, nitrate, and THMs. The expected TDS concentration is within the range of water quality from Apple Valley Ranchos, Victorville, and CSA 42, though greater than Hesperia and CSA 64. The expected nitrate values are greater than the range of nitrate values in all of the water suppliers. Expected THMs concentrations are lower in the Subregional Facilities recycled water than the range from Apple Valley Ranchos, Victorville, and CSA 64.

In addition to the above general comparison, the CIA evaluated specific constituent concentrations and compared them with the groundwater quality for each parameter (where available) or with existing standards water quality standards. This information is provided below in detail because it is essential data to understanding conclusions later in this section regarding antidegradation and potential water quality impacts to groundwater used for potable water supplies in the Alto Subbasin.

pH

Results

Projected Subregional WRP effluent concentration and loading are presented in Table. No loading values can be calculated for pH. No background groundwater pH data were available for comparison to projected effluent.

Table 4.5-6 Average Projected Subregional WRP pH Water Quality

pH - Subregional WRPs						
Applicable Water Quality Objective	Groundwater Background Concentration (mg/L)			Projected Effluent		
	Apple Valley WRP	Hesperia WRP	Eastside WRP	Concentration	Apple Valley/ Hesperia WRP Loading (lbs/day) (2 MGD)	Eastside WRP Loading (lbs/day) (4 MGD)
NA	-	-	-	6.5-8.5 [(a)]	-	-

(a) Preliminary Design Report, Town of Apple Valley WRP / City of Hesperia WRP, Carollo Engineers, December 2009
NA No applicable groundwater quality objective for pH

Comparison to Water Quality Objectives

There is no applicable groundwater quality objective for pH.

Evaluation

Background pH groundwater data were not available for analysis. Projected effluent values are not expected to negatively affect water quality.

Total Suspended Solids

Results

Projected Subregional WRP effluent concentration and loading are presented in Table. The projected effluent concentration is <1 mg/L. No background groundwater TSS data was available for comparison to projected effluent.

Table 4.5-7 Average Projected Subregional WRP TSS Water Quality

TSS - Subregional WRPs						
Applicable Water Quality Objective	Groundwater Background Concentration (mg/L)			Projected Effluent		
	Apple Valley WRP	Hesperia WRP	Eastside WRP	Concentration (mg/L)	Apple Valley/ Hesperia WRP Loading (lbs/day) (2 MGD)	Eastside WRP Loading (lbs/day) (4 MGD)
NA	-	-	-	<1 [(a)]	<17	<33

(a) Process Design Summary Westside Water Reclamation Plant Phase III Expansion and Rehabilitation, Draft, HDR, March 27, 2008
NA No applicable groundwater quality objective for TSS

Comparison to Water Quality Objectives
There are no applicable groundwater TSS water quality objectives for comparison.

Evaluation
Background TSS groundwater data were not available for analysis. Projected effluent values are not expected to negatively affect water quality.

Total Dissolved Solids

Results
Projected Subregional WRP effluent concentration and loading are presented in Table. Based on the contour map (Figure 4.5-13), ambient TDS concentrations in the general vicinity of the proposed Hesperia WRP percolation ponds are less than 200 mg/L. TDS concentrations in the general vicinity of the alternative percolation pond sites for the Apple Valley WRP are likely in the range of 400 to 600 mg/L, although there are very few data points in the immediate vicinity of the alternative pond locations. Proposed locations of ponds associated with Eastside WRP have not been identified at this point in the planning process, but groundwater TDS concentrations in the general vicinity of the WRP are in the range of 200 mg/L. The arithmetic average of upper groundwater TDS concentration in the mapping area is approximately 334 mg/L.

Table 4.5-8 Average Projected Subregional WRP TDS Water Quality

TDS - Subregional WRPs						
Applicable Water Quality Objective (mg/L)	Groundwater Background Concentration (mg/L)			Projected Effluent		
	Apple Valley WRP	Hesperia WRP	Eastside WRP	Concentration (mg/L)	Apple Valley/ Hesperia WRP Loading (lbs/day) (2 MGD)	Eastside WRP Loading (lbs/day) (4 MGD)
500	400-600	<200	200	370 [(a)]	6,176	12,352

(a) Projected effluent concentration assumed to be equal to projected Westside Regional WRP effluent concentration

Comparison to Water Quality Objectives
Projected effluent concentration is lower than the lower limit secondary MCL for TDS of 500 mg/L. The increased local groundwater concentrations could exceed the lower limit secondary MCL for TDS though they do not appear to be at those levels currently, but would definitely not exceed the upper limit MCL of 1,000 mg/L TDS.

Evaluation

Near-field impacts
Based on the observed impacts from past discharges at the Westside Regional WRP and the expected effluent TDS concentration of 370 mg/L, it is expected that percolation pond discharges from the proposed Subregional WRPs may cause the upper groundwater TDS concentration to increase above ambient levels in the very local vicinities of the percolation ponds. The increased local concentrations could exceed the lower limit secondary MCL for TDS

of 500 mg/L though they do not appear to be at those levels currently. TDS levels would definitely not exceed the upper limit MCL of 1,000 mg/L TDS.

Far-field Impacts
Based on the absence of observed far-field TDS impacts from percolation pond discharges observed at the Westside Regional Facility, no increases in groundwater TDS concentrations as a result of percolation ponds are anticipated beyond the immediate vicinity of the percolation ponds.

Chloride

Results
Projected Subregional WRP effluent concentration and loading are presented in Table. Loading values are based on 2 and 4 MGD of flow and are per Subregional WRP. No background groundwater chloride data were available for comparison to projected effluent.

Table 4.5-9 Average Projected Subregional WRP Chloride Water Quality

Chloride - Subregional WRPs						
Applicable Water Quality Objective (mg/L)	Groundwater Background Concentration (mg/L)			Projected Effluent		
	Apple Valley WRP	Hesperia WRP	Eastside WRP	Concentration (mg/L)	Apple Valley/ Hesperia WRP Loading (lbs/day) (2 MGD)	Eastside WRP Loading (lbs/day) (4 MGD)
250	-	-	-	70.6 [(a)]	1,178	2,357

(a) Projected effluent concentration assumed to be equal to projected Westside Regional WRP effluent concentration

Comparison to Water Quality Objectives
Projected effluent concentration is lower than the lower limit secondary MCL for chloride of 250 mg/L.

Evaluation
Background chloride groundwater data were not available for analysis. Projected effluent values will not cause groundwater quality to exceed objectives.

MBAS

Results
Projected Subregional WRP effluent concentration and loading are presented in Table. Loading values are based on 2 and 4 MGD of flow and are per Subregional WRP. No background groundwater MBAS data were available for comparison to projected effluent.

Table 4.5-10 Average Projected Subregional WRP MBAS Water Quality

MBAS - Subregional WRPs						
Applicable Water Quality Objective (mg/L)	**Groundwater Background Concentration (mg/L)**			**Projected Effluent**		
	Apple Valley WRP	**Hesperia WRP**	**Eastside WRP**	**Concentration (mg/L)**	**Apple Valley/ Hesperia WRP Loading (lbs/day) (2 MGD)**	**Eastside WRP Loading (lbs/day) (4 MGD)**
0.5	-	-	-	0.15 [(a)]	3	5

(a) Projected effluent concentration assumed to be equal to projected Westside Regional WRP effluent concentration

Comparison to Water Quality Objectives

Projected effluent concentration is lower than the Secondary MCL for MBAS of 0.5 mg/L.

Evaluation

Background MBAS groundwater data were not available for analysis. Projected effluent values will not cause groundwater quality to exceed objectives.

Ammonia Nitrogen

Results

Projected Subregional WRP effluent concentration and loading are presented in Table. Loading values are based on 2 and 4 MGD of flow and are per Subregional WRP. No background groundwater ammonia nitrogen data were available for comparison to projected effluent.

Table 4.5-11 Average Projected Subregional WRP Ammonia Nitrogen Water Quality

Ammonia Nitrogen - Subregional WRPs						
Applicable Water Quality Objective (mg/L)	**Groundwater Background Concentration (mg/L)**			**Projected Effluent**		
	Apple Valley WRP	**Hesperia WRP**	**Eastside WRP**	**Concentration (mg/L)**	**Apple Valley/ Hesperia WRP Loading (lbs/day) (2 MGD)**	**Eastside WRP Loading (lbs/day) (4 MGD)**
NA	-	-	-	<1 [(a)]	<17	<33

(a) Preliminary Design Report, Town of Apple Valley WRP / City of Hesperia WRP, Carollo Engineers, December 2009

NA No applicable groundwater quality objective for ammonia

Comparison to Water Quality Objectives

There are no applicable groundwater ammonia water quality objectives for comparison.

Evaluation

Background ammonia nitrogen groundwater data were not available for analysis. Projected effluent values are not expected to negatively affect water quality.

Total Nitrogen

Results

Projected Subregional WRP effluent concentration and loading are presented in Table. Loading values are based on 2 and 4 MGD of flow and are per Subregional WRP. No background groundwater total nitrogen data were available for comparison to projected effluent.

Table 4.5-12 Average Projected Subregional WRP Total Nitrogen Water Quality

Total Nitrogen - Subregional WRPs						
Applicable Water Quality Objective (mg/L)	**Groundwater Background Concentration (mg/L)**			**Projected Effluent**		
	Apple Valley WRP	**Hesperia WRP**	**Eastside WRP**	**Concentration (mg/L)**	**Apple Valley/ Hesperia WRP Loading (lbs/day) (2 MGD)**	**Eastside WRP Loading (lbs/day) (4 MGD)**
NA	-	-	-	<8 [(a)]	<134	<267

(a) Preliminary Design Report, Town of Apple Valley WRP / City of Hesperia WRP, Carollo Engineers, December 2009

NA No applicable groundwater quality objective for total nitrogen

Comparison to Water Quality Objectives

There are no applicable groundwater total nitrogen water quality objectives for comparison.

Evaluation

Background ammonia nitrogen groundwater data were not available for analysis. Projected effluent values are not expected to negatively affect water quality.

Nitrate-N

Results

Projected Subregional WRP effluent concentration and loading are presented in Table. Based on the contour map (Figure 4.5-14), nitrate concentrations in the general vicinity of the proposed Hesperia WRP percolation ponds are less than 1.0 mg/L similar to the quality observed in the general vicinity of the Westside Regional WRP. Nitrate concentrations in the general vicinity of the alternative percolation pond sites for the Apple Valley WRP are likely in the range of 1.0 to 5.0 mg/L, although there are very few data points in the immediate vicinity of the alternative pond locations. Proposed locations of ponds associated with Eastside WRP have not been identified at this point of the planning process, but upper groundwater nitrate concentrations in the general vicinity of the WRP are in the range of 1.0 to 2.0 mg/L. The arithmetic average of upper groundwater nitrate-N concentration in the mapping area is approximately 1.6 mg/L.

Table 4.5-13 Average Projected Subregional WRP Nitrate-N Water Quality

Nitrate-N - Subregional WRPs						
Applicable Water Quality Objective (mg/L)	**Groundwater Background Concentration (mg/L)**			**Projected Effluent**		
	Apple Valley WRP	**Hesperia WRP**	**Eastside WRP**	**Concentration (mg/L)**	**Apple Valley/ Hesperia WRP Loading (lbs/day) (2 MGD)**	**Eastside WRP Loading (lbs/day) (4MGD)**
10	1-5	1	-	4 [(a)]	83	167

(a) Preliminary Design Report, Town of Apple Valley WRP / City of Hesperia WRP, Carollo Engineers, December 2009

Comparison to Water Quality Objectives
Projected effluent concentration is lower than primary MCL for nitrate of 10 mg/L.

Evaluation

Near-field impacts
Based on the observed impacts from past discharges at the Westside Regional WRP and the expected effluent nitrate-N concentration of 4.0 mg/L, it is expected that percolation pond discharges from the proposed Subregional WRPs will likely cause the upper groundwater nitrate concentration to increase above ambient levels in the very local vicinities of the percolations ponds. However, the increased groundwater nitrate concentrations should not exceed the expected effluent nitrate-N of 4.0 mg/L, which is below the water quality objective of 10.0 mg/L.

Far-field Impacts
Based on the absence of observed far-field nitrate impacts from percolation pond discharges observed at the Westside Regional WRP, no increases in groundwater nitrate concentrations as a result of discharge to proposed Subregional WRP percolation ponds are anticipated beyond the immediate vicinity of the percolation pond sites.

ARSENIC

Results
Projected Subregional WRP effluent concentration and loading are presented in Table 4.5.14. Loading values are based on 2 and 4 MGD of flow and are per Subregional WRP. No background groundwater arsenic data were available for comparison to projected effluent.

Table 4.5.14 Average Projected Subregional WRP Arsenic Water Quality

Arsenic - Subregional WRPs						
Applicable Water Quality Objective (mg/L)	**Groundwater Background Concentration (mg/L)**			**Projected Effluent**		
	Apple Valley WRP	**Hesperia WRP**	**Eastside WRP**	**Concentration (mg/L)**	**Apple Valley/ Hesperia WRP Loading (lbs/day) (2 MGD)**	**Eastside WRP Loading (lbs/day) (4 MGD)**
0.05	-	-	-	0.004 [(a)]	0.067	0.134

(a) Projected effluent concentration assumed to be equal to projected Westside Regional WRP effluent concentration

Comparison to Water Quality Objectives
Projected effluent concentration is lower than primary MCL for arsenic of 0.05 mg/L.

Evaluation
Background arsenic groundwater data were not available for analysis. Projected effluent values will not cause groundwater quality to exceed objectives.

Copper

Results
Projected Subregional WRP effluent concentration and loading are presented in Table. Loading values are based on 2 and 4 MGD of flow and are per Subregional WRP. No background groundwater total copper data were available for comparison to projected effluent.

Table 4.5-15 Average Projected Subregional WRP Total Copper Water Quality

Copper - Subregional WRPs						
Applicable Water Quality Objective (µg/L)	**Groundwater Background Concentration (mg/L)**			**Projected Effluent**		
	Apple Valley WRP	**Hesperia WRP**	**Eastside WRP**	**Concentration (µg /L)**	**Apple Valley/ Hesperia WRP Loading (lbs/day) (2 MGD)**	**Eastside WRP Loading (lbs/day) (4 MGD)**
1,000	-	-	-	2.9 [(a)]	0.048	0.097

(a) Projected effluent concentration assumed to be equal to projected Westside Regional WRP effluent concentration

Comparison to Water Quality Objectives
Projected effluent concentration is lower than the secondary MCL for copper of 1,000 µg/L.

Evaluation
Background copper groundwater data were not available for analysis. Projected effluent values will not cause groundwater quality to exceed objectives.

Zinc

Results

Projected Subregional WRP effluent concentration and loading are presented in Table. Loading values are based on 2 and 4 MGD of flow and are per Subregional WRP. No background groundwater total zinc data were available for comparison to projected effluent.

Table 4.5-16 Average Projected Subregional WRP Total Zinc Water Quality

Zinc - Subregional WRPs						
Applicable Water Quality Objective (µg/L)	Groundwater Background Concentration (mg/L)			Projected Effluent		
	Apple Valley WRP	Hesperia WRP	Eastside WRP	Concentration (µg /L)	Apple Valley/ Hesperia WRP Loading (lbs/day) (2 MGD)	Eastside WRP Loading (lbs/day) (4 MGD)
5,000	-	-	-	45 [(a)]	0.75	1.5

(a) Projected effluent concentration assumed to be equal to projected Westside Regional WRP effluent concentration

Comparison to Water Quality Objectives

Projected effluent concentration is lower than the secondary MCL for zinc of 5,000 µg/L.

Evaluation

Background zinc groundwater data were not available for analysis. Projected effluent values will not cause groundwater quality to exceed objectives.

Cyanide

Results

Projected Subregional WRP effluent concentration and loading are presented in Table. Loading values are based on 2 and 4 MGD of flow and are per Subregional WRP. No background groundwater cyanide data were available for comparison to projected effluent.

Table 4.5-17 Average Projected Subregional WRP Cyanide Water Quality

Cyanide - Subregional WRPs						
Applicable Water Quality Objective (µg /L)	Groundwater Background Concentration (mg/L)			Projected Effluent		
	Apple Valley WRP	Hesperia WRP	Eastside WRP	Concentration (µg /L)	Apple Valley/ Hesperia WRP Loading (lbs/day) (2 MGD)	Eastside WRP Loading (lbs/day) (4 MGD)
150	-	-	-	3.0 [(a)]	0.05	0.1

(a) Projected effluent concentration assumed to be equal to projected Westside Regional WRP effluent concentration

Comparison to Water Quality Objectives

Projected effluent concentration is lower than the primary MCL for cyanide of 150 µg/L.

Evaluation
Background cyanide groundwater data were not available for analysis. Projected effluent values will not cause groundwater quality to exceed objectives.

Bis(2-ethyl)phthalate

Results
Projected Subregional WRP effluent concentration and loading are presented in Table. Loading values are based on 2 and 4 MGD of flow and are per Subregional WRP. No background groundwater bis(2-ethyl)phthalate data were available for comparison to projected effluent.

Table 4.5-18 Average Projected Subregional WRP Bis(2-ethyl)phthalate Water Quality

Bis(2-ethyl)phthalate - Subregional WRPs						
Applicable Water Quality Objective (µg/L)	Groundwater Background Concentration (mg/L)			Projected Effluent		
	Apple Valley WRP	Hesperia WRP	Eastside WRP	Concentration (µg/L)	Apple Valley/ Hesperia WRP Loading (lbs/day) (2 MGD)	Eastside WRP Loading (lbs/day) (4 MGD)
4	-	-	-	<2.0[(a)]	<0.03	<0.07

(a) Projected effluent concentration assumed to be equal to projected Westside Regional WRP effluent concentration

Comparison to Water Quality Objectives
Projected effluent concentration is lower than the primary MCL of 4 µg/L.

Evaluation
Background bis(2-ethyl)phthalate groundwater data were not available for analysis. Projected effluent values will not cause groundwater quality to exceed objectives.

Total Trihalomethanes

Results
Projected Subregional WRP effluent concentration and loading are presented in Table. Loading values are based on 2 and 4 MGD of flow and are per Subregional WRP. No background groundwater total THMs data were available for comparison to projected effluent.

Table 4.5-19 Average Projected Subregional WRP THMs Water Quality

THMs - Subregional WRPs						
Applicable Water Quality Objective (µg /L)	Groundwater Background Concentration (mg/L)			Projected Effluent		
	Apple Valley WRP	Hesperia WRP	Eastside WRP	Concentration (µg /L)	Apple Valley/ Hesperia WRP Loading (lbs/day) (2 MGD)	Eastside WRP Loading (lbs/day) (4 MGD)
80	-	-	-	<1.0 [(a)]	<0.02	<0.03

(b) Projected effluent concentration assumed to be equal to projected Westside Regional WRP effluent concentration

Comparison to Water Quality Objectives
Projected effluent concentration is lower than the USEPA Stage 1 Disinfectants and Disinfection Byproducts Rule for THMs of 80 µg /L.

Evaluation
Due to the very low expected effluent concentration of THMs (less than 1.0 µg/L) from the proposed Subregional WRPs, no impacts on upper groundwater THMs concentrations are anticipated as a result of discharge to proposed Subregional WRP percolation ponds. The Subregional WRPs will use UV disinfection not chlorination, so it is not expected that THMs will be generated or discharged by the Subregional WRPs.

CEC Evaluation

Many CECs are present in both wastewater and surface water in detectable concentrations. Wastewater, therefore, is believed to be a source of CECs. The transport of CECs into groundwater has to this point largely been uninvestigated. However, as discussed above, the recent SWRCB study found the transport of CECs into groundwater from surface spreading of treated wastewater is believed to be negligible. Literature investigating the concentration of CECs in groundwater, however, could not be located. While treatment processes appear to remove some CECs well, additional research is needed to understand how to further evaluate CEC sources and, if needed, reduce their transport into surface water, recycled water, and drinking water. The best control methodology is to not allow pharmaceuticals to be disposed of down the drain.

Groundwater Travel Time to the Nearest Wells

In the vicinity of the proposed Apple Valley WRP Alternative 1 percolation pond site, groundwater flows generally from north to south. Although, further south of the Alternative 1 proposed pond site, the Spring 2008 groundwater contours suggests that a groundwater elevation contour interval (at 2750 ft elevation) "encloses" the site such that groundwater may also flow in a northerly direction toward the site. In the immediate vicinity of the Apple Valley Subregional WRP Alternative 2 percolation pond site the estimated groundwater flow direction is southwesterly. Near the proposed Hesperia Subregional WRP site the groundwater flow direction is northeasterly. Near the proposed Eastside Subregional WRP site the groundwater flow direction is generally also northwesterly.

Two Apple Valley Ranchos Water Company public water supply wells, Nos. 24 and 27, are located approximately two miles southeast of the Apple Valley Subregional WRP Alternative 2 percolation pond site. Based on the above-described groundwater conditions, these wells are located in a somewhat cross-gradient direction from the Alternative 2 percolation pond site. Depths to groundwater measured at wells in the vicinity of the Alternative 2 percolation pond site during spring 2008 ranged from about 72 feet to the north of the site to 188 feet to the south of the site and near well Nos. 24 and 27. Based on the available information discussed above, it is estimated that wastewater discharged to the Alternative 2 percolation pond site would have a travel time to a location two miles down-gradient of at least eight years. This time does not include the transport time for wastewater to move through the vadose zone to groundwater. Since well Nos. 24 and 27 are located in a cross-gradient groundwater flow direction, the potential travel time of wastewater percolation from the Alternative 2 percolation pond site would

be greater than eight years, if the Alternative 2 percolation pond site had an effect on groundwater quality in the vicinity of well Nos. 24 and 27 at all. Actual depths to groundwater and groundwater flow velocities in the immediate vicinity of the percolation ponds will be further verified once the necessary hydrogeological investigation for the proposed disposal site(s) is completed. Based on available groundwater data, the estimated travel time from the location of the proposed Hesperia and Eastside Subregional WRP percolation pond sites to one mile down-gradient is approximately 14.5 years.

The data analyzed above indicates that the discharge of recycled water into the Alto Subbasin may include water pollutants that will change groundwater quality in the vicinity of the percolation ponds or high use locations, but the forecast changes in groundwater quality are not identified as being significant when compared to existing water quality standards. However, to reach a conclusion regarding antidegradation and compliance with waste discharge requirements, the CIA document prepared by LWA identifies additional factors that must be considered, summarized below, that must be given consideration.

For a 'complete' antidegradation analysis, APU 90-04 requires the following:

- *Consideration of alternative control measures that might reduce, eliminate, or compensate for the negative impacts of the proposed capacity increase;*
- *Evaluation of each alternative for costs, impacts on the water resource, and compliance with applicable laws, regulations and policies;*
- *An assessment of the socio-economic impacts of each alternative; and*
- *A balancing of the alternatives based on environmental and socio-economic considerations.*

Based on the above analysis, the control measure or measures that are determined to be consistent with the maximum benefit to the people of the State are to be proposed.

The alternative control measures considered for the Subregional WRPs pond discharges are summarized in the following text.

VVWRA has considered a number of control measures to address trunk sewer capacity limitations to carry regional wastewater to the Westside Regional WRP, as well as to address the need for greater recycled water production. Based on these factors, VVWRA has determined that the construction of Subregional WRPs would best address the above concerns. Based on the results of a preliminary antidegradation assessment, VVWRA has incorporated a number of control measures into the designs for the Subregional WRPs. As such, the Subregional WRPs project presented in this document already contains control measures as proposed. These incorporated control measures include MBR for filtration and nitrogen removal and UV disinfection for elimination of THMs. Additional control measures to eliminate any increase in concentration or mass loadings to the groundwater include:

<u>Reverse Osmosis at the Subregional WRPs</u>

- *The addition of RO at each Subregional WRP would reduce the concentrations of all constituents.*

The No Subregional Project Alternative

- *If the Subregional WRPs are not constructed, the alternative is to expand the Westside Regional WRP to 22 mgd, construct new interceptor sewers to replace existing lines of insufficient capacity, and to deliver the additional recycled water produced at the Westside Regional WRP to the member agencies where it would be used.*

The following evaluation of alternative control measures and incremental increases in costs is abstracted from the CIA.

As stated above, VVWRA has incorporated a number of control measures into the designs for the Subregional WRPs, including MBR for filtration and nitrogen removal and UV disinfection for elimination of THMs. The additional control measures to eliminate any increase in concentration or mass of the groundwater are presented below.

Reverse Osmosis for 2 mgd at each Subregional WRP

The projected concentrations for this alternative are presented in Table4.5-20. These projections are also based on the RO efficiencies presented in Table 4.5-21. Under this alternative the average effluent concentrations of all constituents analyzed are projected to be below the range of background groundwater concentrations.

Table 4.5-20. Predicted Subregional WRP Pond Discharge Quality for Alternative Control Measures

Constituent	Applicable Water Quality Objective	Range of Groundwater Background Concentrations	Effluent Concentration at Subregional WRPs	
			As Proposed	Additional Control Measure: MF/RO (1)
pH	6.5 – 8.5	--	6.5 – 8.5	6.5 – 8.5
TSS (mg/L)	NA	--	<1	0
TDS (mg/L)	500-Recommended 1000-Upper 1500-Short Term	<200 - 600	370	18.5
Chloride (mg/L)	250	--	70.6	3.5
MBAS (mg/L)	0.5	--	0.15	0.003
Ammonia Nitrogen	NA	--	<1.0	<0.2
Nitrate (mg/L)	10	<1 - 5	5	<0.5
Total Nitrogen	NA	--	<8	<3.5
Arsenic (mg/L)	0.05	--	0.004	0.0004
Copper (µg/L)	1,000	--	2.9	0.4
Zinc (µg/L)	5,000	--	45	13.5
Cyanide (µg/L)	150	--	3.0	0.3
Bis(2-ethylhexyl)phthalate (µg/L)	4	--	<2.0	<0.04
Total THMs (µg/L)	80	0	<1.0 (2)	0
Chlorodibromomethane	--	--	0.41	0
Bromodichloromethane	--	--	0.56	0

(1) Based on percent reductions shown in Table.
(2) No THMs will be produced at the Subregional WRPs due to UV disinfection instead of chlorinatation.

Table 4.5-21 RO Removal Efficiencies

Constituent	MF/RO Removal Efficiency[1]
pH	NA
TSS	100%
TDS	95%
Chloride	95%
MBAS	98%[2]
Ammonia Nitrogen	83%[3]
Total Nitrogen	54%[3]
Nitrate	95%
Arsenic	89%
Copper	85%
Zinc	70%
Cyanide	90%
bis(2-ethylhexyl) phthalate	98%
Total THMs	98%[2]

(1) From a technical memo prepared for the City of Los Angeles (Damon S. Williams, LLC, 2005)
(2) Assumed the same removal efficiency as bis(2 ethylhexyl)phthalate.
(3) Assumed low end of literature values due to the relatively low starting values of the base project.

The No Subregional Project Alternative

Under this alternative, there would be no impacts to the groundwater in the locations of the proposed Subregional WRPs. However, the additional capacity that would be collected at the proposed Subregional WRPs would instead be discharged at the Westside Regional WRP, thus affecting the groundwater in the vicinity of the Westside Regional WRP rather than in the vicinity of the proposed Subregional WRPs. An additional impact of the No Subregional Project Alternative would be any associated degradation due to the construction of new interceptor sewers to replace existing lines of insufficient capacity.

The incremental costs of incorporating the alternative treatment control measures for the Subregional WRPs is presented in the following text.

The capital, annual operation and maintenance, and total annual costs for the Subregional WRPs and additional alternative control measures are presented in Table 4.3-22. The RO costs include the costs of building the Subregional WRPs. The No Subregional Project Alternative costs are costs for a complete collection, treatment, and delivery system without Subregional Facilities. Total annual costs were based on amortizing the capital costs based on a 30-year financing period and a 5% interest rate (annualization factor = 0.0651).

Table 4.5-22. Estimated Costs of the Subregional WRPs, as Proposed, vs. Alternative Control Measures

Alternative	Capital Cost	Annual O&M Cost	Total Annual Cost
Subregional WRPs, as Proposed	$65,790,000(1)	$1,484,000	$5,767,000
Subregional WRPs, with RO (3)	$101,827,000(2)	$5,098,000	$11,730,000
No Subregional Project Alternative(4)	$100,400,000	$539,000	$7,075,000

(1) Includes MBR treatment and UV disinfection for the Apple Valley and Hesperia WRPs, expansion of these facilities to 2MGD each, and construction of the Hesperia Lift Station. Also includes estimated project and design fees. Does not include the cost of recycled water disposal.
(2) Total costs for Subregional WRPs listed above plus $36,037,000 cost for addition of reverse osmosis and brine disposal facilities. Cost excludes MF, which is provided by MBR.
(3) RO costs for 2 mgd of treatment at the Apple Valley and Hesperia Subregional WRPs
(4) From RBF Technical Memorandum on Recycled Water Options (RBF, 2010)

State and Federal water quality laws require that discharges not result in an exceedance of water quality standards. Expected changes in compliance associated with the Subregional WRPs are discussed below.

Pond discharges from proposed Subregional WRPs are not expected to result in either near-field or far-field exceedances of applicable water quality objectives, including nitrate, TDS, and total THMs.

Assessment of Socio-Economic Impacts

Socio-economic impacts to the VVWRA service area as a result of implementing alternative control measures are assessed at two levels: (1) impact on individual households due to sewer fee increases, and (2) impact on the community based on a modeling of key economic indicators.

Impacts on Monthly User Charges

VVWRA facilities are paid for through a combination of various fees paid by users, such as connection fees and monthly user charges, and other sources, such as grants. Users within VVWRA's service area pay two monthly user charges – one to their respective City or community for sewer collection and one to VVWRA for wastewater treatment and disposal. The monthly user charge for VVWRA during the 2007/2008 fiscal year to cover the operating costs associated with the 18 mgd expansion of the Westside Regional WRP is $1,614 per MG (million gallons), or $12.03 per EDU4 per month. The monthly user charge for the 2007/2008 fiscal year is being used in this analysis because it reflects the baseline economic conditions prior to the charges associated with upgrades evaluated in this document. The baseline combined monthly user charge for each of the member agencies is presented in Table 4.5-23.

4 1 EDU = equivalent dwelling unit = 245 gallons/day or 20 fixture units.

Table 4.5-23 2007/2008 Combined Monthly User Charges for VVWRA Member Agencies

Member Agency	Member User Charge	VVWRA User Charge	Total User Charge
Victorville	$19.95	$12.03	$31.98
CSA 42 (Oro Grande)	$44.95	$12.03	$56.98
CSA 64 (Spring Valley Lakes)	$24.87	$12.03	$36.90
Apple Valley	$19.96	$12.03	$31.99
Hesperia	$18.76	$12.03	$30.79

In order to estimate the impact of the alternative control measures on member agency user charges, the estimated increase in VVWRA user charge related to the addition of the alternative treatments is calculated for each alternative. In order to calculate the estimated increase in user charge, it is necessary to estimate the number of equivalent dwelling units (EDUs) when the VVWRA facilities (Regional and Subregionals) are operating at each stage of the design capacity. The estimated numbers of EDUs at the various flow capacities of VVWRA facilities are presented in Table4.5-24. The estimated number of EDUs for the Subregional WRPs and the Westside Regional WRP uses a flow of 18 mgd to the Westside Regional WRP plus 2 mgd for each for the Hesperia and Apple Valley Subregional WRPs for a total of 22 mgd. (The population, flow and EDU figures were derived from VVWRA's Sewerage Facilities Plan Update, Year 2005 Amendment, adopted by the Board of Commissioners on August 1, 2005)

Table 4.5-24 Estimated Population and EDUs at VVWRA Capacities

Flow, mgd	Projected Population	EDUs
18	195,825	73,469
22	275,000	89,796

(1) Derived from VVWRA's Sewerage Facilities Plan Update, Year 2005 Amendment, adopted by the Board of Commissioners on August 1, 2005. Assumes 245 gpd/EDU and 80 gal/person/day. 245 gpd/EDU is a standard number used by wastewater agencies including VVWRA. The flow projection discussed earlier in this document used an alternate number tailored to the region.

The impacts of the alternative control measures for the Subregional WRPs evaluated on VVWRA's monthly user charge are presented in Table4.5-25. The increases in user charge would be associated with the alternative control measure and would be in addition to any increases associated with the addition of the Subregional WRPs themselves.

Table 4.5-25 Impacts of Alternative Control Measures of the Addition of the Subregional WRPs on VVWRA's Monthly User Charge

Alternative	Total Annual Cost (1)	User Charge Increase (2)	% Increase over VVWRA User Charge (3)
Subregional WRPs, with RO (4)	$11,730,000	$10.89	90%
No Project Alternative	$7,075,000	$6.57	55%

(1) From Table 4.5-22.
(2) Based on 89,796 EDUs when the total flow is at 22 mgd.
(3) Percent increase over VVWRA base user charge of $12.03. It should be noted that users pay an additional charge to the member agency.
(4) 2 mgd each for the Apple Valley and Hesperia WRPs, at build out.

Implementation of RO for the Subregional WRPs in addition to RO for the Westside Regional WRP would result in the addition of the increase in user charges presented.

Monthly user charges resulting from the various alternative control measures are compared to the San Bernardino County median and the statewide median (Table4.5-26). Combined member agency monthly user charges for the 2007/2008 fiscal exceed both the San Bernardino County and statewide medians, without consideration of any additional control measures.

Table 4.5-26 County and Statewide 2007/2008 User Charges for Comparison

	Median User Charge	User Charge Range
San Bernardino County	$24.42	$13.00 – $54.54
Statewide	$26.83	$0.00 – $231.92
Statewide Facilities with a Population of 100,000-499,999	$20.19	$10.25 – $37.34

With the Subregional WRP RO alternative, the user charges would range between $41.68 for Hesperia and $67.87 for CSA 42, or approximately 55% higher than the Statewide Median User Charge for Hesperia and 153% higher than the Statewide Median User Charge for CSA 42.

The CIP includes an economic model that traces spending through an economy and measures the cumulative effects of that spending. The model used in the CIP is IMPLAN® (IMpact Analysis for PLANing) Version 2. Please refer to the CIP in Volume 2 of the EIR for the details on this model effort. The IMPLAN®-modeled economic impacts of the alternative control measures are reported in terms of labor income loss, indirect business tax loss, and employment loss and are presented separately for each upgrade component. Table4.5-27 presents the impacts of the alternative control measures for the Subregional WRPs.

Table 4.5-27 Economic Impacts of Additional User Charges Associated with Alternative Control Measures for the Subregional WRPs

Treatment Option	Additional User Charge/ Year	Economic Impact			
		Labor Income Loss	Employment Loss	Indirect Business Tax Loss (2)	Total Output Loss
Subregional WRPs, with RO(1)	$130.63	$2,445,796	62.5 jobs	$447,500	$7,597,622
No Subregional Project Alternative	$78.79	$1,475,193	37.7 jobs	$43,495	$4,582,539

(1) RO costs for 2 mgd of treatment at the Apple Valley and Hesperia Subregional WRPs
(2) Total State and Local Tax

As shown by the economic indicators provided in…. Table4.5-27 the costs of all alternative treatment options to the communities within the VVWRA service area are considerable. It should also be remembered that these costs are in addition to the costs of the proposed projects. Furthermore, because the economic indicators represent only a single year's impacts on the service area's economy – they are, in fact, annualized economic indicators – these impacts would be repeated every year for the life-cycle of the control measure. The losses, whether in dollars or jobs, are linked to a reduction in DPI due to an increased user charge required to pay for the additional treatment of VVWRA effluent. All communities possess

somewhat unique spending habits as a whole, and a reduction in DPI has different consequences for some economic sectors as compared to others depending on the community in which the reduction in DPI occurs. The IMPLAN® model output also includes a listing of affected sectors for each economic indicator. The Top 10 sectors in the VVWRA service area projected to be affected by the implementation of the alternative control measures in terms of losses in employment shown in Table4.5-28. The sectors hit hardest by employment loss are not necessarily the same ones projected to have the greatest impact on loss of income labor because a smaller number of medium to high paying jobs (for example, health care industry jobs) will have a greater impact on a community's labor income than a larger number of low paying jobs (for example, food service jobs).

Table 4.5-28 Top 10 Sectors Affected by Implementation of Alternative Control Measures

Top 10 Affected Employment Sectors(1)
Food services and drinking places
Private hospitals
Offices of physicians, dentists, and other health practitioners
Real estate establishments
Retail Stores - General merchandise
Retail Stores - Food and beverage
Nursing and residential care facilities
Private household operations
Retail Stores - Motor vehicle and parts
Retail Stores - Clothing and clothing accessories

(1) Taken from IMPLAN® model output.

Balancing of Environmental and Socio-Economic Impacts

State Water Board guidance requires that a complete antidegradation analysis include a balancing of the proposed action against the public interest. VVWRA has chosen to comply with this requirement by comparing the socio-economic impacts of the proposed treatment and alternative control measures with the environmental, or water quality aspects, of each alternative. Based on this comparison, a project deemed to constitute best practicable treatment or control consistent with maximum benefit to the people of the State is proposed.

All of the alternative control measures considered in this analysis would result in compliance with water quality objectives prescribed in the Basin Plan. Moreover, the reduction in water quality that would result from any of the alternatives will not unreasonably affect actual or potential beneficial uses.

The proposed treatment for the Subregional WRPs includes a number of treatment controls that result in high effluent quality for the constituents of concern. The nitrate effluent levels are projected to be 50% of the Drinking Water MCL. TDS effluent levels are projected to be below the lower limit of the secondary MCL. THMs are not expected to be produced due to the use of UV disinfection rather than chlorination. The proposed project, by producing Title 22 water for the entire plant flow, will also facilitate maximum practicable reclamation.

There are at least some adverse environmental and socio-economic aspects of implementing the alternative control measure of RO. On the environmental side, RO requires significant

amounts of energy and produces a salt brine byproduct. The ultimate disposal of the brine, assuming it is dried and trucked to a landfill, would result in increased traffic and air pollution and would decrease the life of land fill facilities. On the socio-economic side, RO would require significant increases in monthly user charges, which in turn would result in more than 60 lost jobs and other adverse economic impacts within VVWRA's service area. To the extent the addition of RO by VVWRA would contribute to the overall societal issue of salt management, it is not in the public interest to manage salt on a piecemeal basis. Rather coordinated plans to manage salt should be developed on a basin-wide basis. For the above reasons, it is not in the public interest to require VVWRA to implement RO to maintain existing or background water quality.

The No Subregional Project Alternative would result in no environmental impact to the groundwater in the vicinity of the proposed Subregional WRPs. However, the additional effluent that is proposed to be treated at the Subregional WRPs would instead be discharged to the groundwater in the vicinity of the Westside Regional WRP or to the Mojave River. An additional impact of the No Subregional Project Alternative would be any associated degradation due to the construction of new interceptor sewers to replace existing lines of insufficient capacity. From a socio-economic perspective, the No Subregional Project Alternative would result in a loss of approximately 38 jobs due to increases in user charges associated with the construction of new interceptor sewers and other adverse economic impacts in excess of the cost of the proposed Subregional WRPs.

The water quality impacts analysis presented in …. this Subchapter *of this report shows that the proposed treatment will result in generally high water quality being produced by the Subregional WRPs. THMs will not be produced in the effluent due to use of UV disinfection, and TDS levels will also be below the lower secondary MCL. The proposed treatment will also produce total nitrogen levels in the effluent of about 6 mg/L, and average nitrate levels of about 5 mg/L. Finally, the proposed project will produce Title 22 water for the entire plant flow, thereby facilitating maximum practicable reclamation.*

<u>Consistency with Antidegradation Policies and Compliance with Waste Discharge Requirements</u>

The construction of the Subregional WRPs, which include MBR and UV disinfection determined to comprise best practical treatment or control, is consistent with Federal and State antidegradation policies for the following reasons:

- *The construction of the Subregional WRPs will be necessary to accommodate important economic and social development in the Victor Valley area. Additionally, the construction of the Subregional WRPs facilitates maximum practicable reclamation, which is an important resource for VVWRA's member agencies and their citizens and businesses.*
- *VVWRA has evaluated alternative control measures to reduce the impact of the construction of new facilities on the groundwater quality. As a result of this evaluation, VVWRA has committed to implement control measures that produce effluent that meets Title 22 including low nitrate and TDS levels, and no THMs. This constitutes best practicable treatment or control.*
- *The benefits of maintaining existing water quality and mass loadings for the constituents analyzed are not commensurate with the costs of additional treatment. The small*

decrease in quality with respect to the constituents considered in the analysis is unlikely to affect beneficial uses of the groundwater.

- *The construction of the Subregional WRPs will not adversely affect existing or probable future beneficial uses of groundwater, nor will it cause groundwater quality to fall below applicable water quality objectives.*
- *Based on the above, the requested discharge, coupled with the best practicable treatment or control measures VVWRA has committed to implement, is consistent with the maximum benefit to the people of the State.*
- *It is also consistent with the Porter-Cologne Act in that the resulting groundwater quality will constitute the highest water quality that is reasonable, considering all demands placed on the waters, economic and social considerations, and other public interest factors.*

Based on the above factors that reach a finding of consistency with antidegradation policies, the proposed project can be implemented in a manner consistent with anticipated waste discharge requirements and without violating any water quality standards.

b. Substantially deplete groundwater supplies or interfere substantially with groundwater recharge such that there would be a net deficit in aquifer volume or a lowering of the local groundwater table level (e.g., the production rate of pre-existing nearby wells would drop to a level which would not support existing land uses or planned uses for which permits have been granted)?

If the proposed project is implemented, beginning in 2014 it will begin diverting up to 2 million gallons of wastewater that will be treated to meet Title 22 recycled water standards (equivalent to a little over 2,000 acre-feet of water). Assuming that this 2 million gallons per day offsets 2 million gallons of extraction from the Alto Subbasin groundwater aquifer, the proposed project will have a major beneficial effect on the groundwater resources of this Subbasin by reducing future extractions of groundwater by a little more than 2,000 acre-feet.

The data in Figure 4.5-19 also demonstrate that with the exception of 2014, there will be no reduction in discharges to the Transition Zone or to the Centro Subbasin compared to the existing flows (2009). Further, due to future growth beginning in approximately 2016, excess flows will again be discharged to the Transition Zone and ultimately to the Centro Subbasin. At all times the flows mandated by the CDFG Memorandum of Understanding will be delivered to the Transition Zone to support the riparian habitat that depends on these flows, particularly during the summer.

The Alto Subbasin also has a minimum base flow obligation to the Centro Subbasin, which is measured at the Lower Narrows. Table 4.5-29 provides a summary of reclaimed water availability based on recent VVWRA discharges and recent combined flow at the Lower Narrows. If the combined flows at the Lower Narrows exceeds 15,000 acre-feet then "VVWRA may decrease its discharge by an amount equal to the prior year's combined flow exceedance over 15,000 acre-feet. As the lower tabulation on Table 4.5-29 illustrates, substantial volumes of wastewater are available for diversion to recycled water use (ranging from 2.78 mgd minimum to 12.32 maximum), while still meeting the obligations to the Centro Subbasin. Thus, the initial volume of wastewater that would be captured and used by the Subregional WRPs is well within the minimum volume of reclaimed water availability, even during years with only limited combined flows (refer to 2003, 2004 and 2007). This information combined with the data provided in Figure 4.5-29 showing the future increase in discharges ensures that an adequate

volume of treated effluent can continue to be discharged to the Mojave River for the foreseeable future.

Based on the facts and findings presented above, the conclusion reached in this analysis is that the proposed project, installation and operation of the Apple Valley and Hesperia Subregional WRPs, can proceed without causing any significant impact on groundwater supplies. Since some unquantifiable portion of the Title 22 Recycled Water may be delivered to percolation ponds for disposal on an annual basis, the Alto Subbasin may further benefit from implementation of the proposed project. No significant adverse environmental effect on groundwater supplies or groundwater recharge is forecast so there would not be a net deficit in aquifer volume as a result of the proposed project. As described in the preceding text, the Alto Subbasin would benefit from the proposed and based on the available data, the Centro Basin would not experience a significant adverse impact to its groundwater resources.

c. Substantially alter the existing drainage pattern of the site or area, including through the alteration of the course of a stream or river, in a manner which would result in substantial erosion or siltation onsite or offsite?

As indicated in Section 4.2, none of the project facilities will be located within or adjacent to a stream channel where concentrated surface runoff occurs. All Subregional WRP facility sites are located in areas that have minimal slopes and that are subject to sheet flow when surface runoff occurs. Most or all of the pipelines required to support the Subregional WRPs occur within existing roadways. Implementation of the proposed Subregional WRP facilities will cause minor changes to absorption rates and the amount of runoff from the project sites, which include the WRPs themselves or lift stations. The installation of the percolation basins will also modify the local drainage, but the basin interior contains any precipitation that falls within its boundaries, and does not contribute additional runoff downstream of a basin site.

Even though the whole of the project area has shallow slopes, the modifications to surface flows at each project site has a potential to concentrate flows downstream and cause downstream erosion and sedimentation. This potential impact is caused by two changes in the landscape: first, the impervious surfaces generate more runoff than the natural soils at each facility site; and second, the upstream flows must be intercepted and diverted around each facility site and then released on the downstream side of a facility, most often as concentrated flow that increases the potential for erosion. As might be expected, the greater the rainfall, the greater the potential for the proposed project facilities to cause significant erosion and sedimentation.

Because the proposed Subregional WRP facilities are still in the early stages of engineering design, detailed civil engineering of the specific facility infrastructure has not yet been completed. As a result, the drainage design of each facility is not yet completed. Where a specific design is unavailable for evaluation and a potential exists for significant disruption in the local drainage system, the evaluation shifts to establishment of design requirements for the drainage system, expressed as mitigation measures, in order to control a potential adverse impact to a less than significant impact level. These potential impacts and design requirements can be divided into those potential impacts during construction (short-term drainage design measures) and after construction (long-term drainage design measures)

Table 4.5-29

Update 9 March 2010

VVWRA West Regional (Shay Road) Reclaimed Water Availability

Fish and Game MOU

	Year	VVWRA Average Dry Weather Flow (MGD)	Increase in Flow (MGD)	Percent Increase in Base Flow	Base Flow for Fish and Game MOU (MGD)	F&G MOU 20% of Increase (MGD)	LESS that used by SCLA Golf Course (MGD)	**TOTAL** to Mojave River per F&G MOU (MGD)	Excess Discharged (MGD)	**TOTAL** to Mojave River per F&G MOU (Ac-ft/yr)	Excess Discharged (Ac-ft/yr)
F&G MOU Year One	2003	9.35	NA	NA	8.05	NA		8.05	1.3	9016	1456
	2004	10.6	1.25	11.79%	8.05	0.25		8.30	2.3	9296	2576
	2005	12.03	2.68	22.28%	8.05	0.54		8.59	3.4	9616	3857
	2006*	12.32	2.97	24.11%	8.05	0.59	0.29	8.35	4.0	9356	13798
	2007	12.43	3.08	24.78%	8.05	0.62	0.27	8.40	4.0	9403	12252
	2008	12.3	2.95	23.98%	8.05	0.59	0.31	8.33	4.0	9329	4446
	2009**	12.07	2.72	22.54%	8.05	0.54	0.34	8.25	3.8	9244	4274

Watermaster Base Flows

Calendar Year	Combined Flow Lower Narrows***(Ac/ft)	F&G MOU Minimum Flow (Ac-ft/yr)	F&G MOU Required VVWRA Discharge (9000 Ac-ft/yr +20% growth less SCLA GC)	VVWRA Effluent Flows required per F&G MOU (Ac-ft/yr)	VVWRA Discharge (Ac-ft/yr)	Reclaimed Water Availability (Ac-ft/yr)	Reclaimed Water Availability (MGD)
2003	6,242	15,000	9016	NA			
2004	5,384	15,000	9296	8758	11872	3114	2.78
2005	192,590	15,000	9616	9616	13473	3857	3.44
2006	27,252	15,000	9356		13798	13798	12.32
2007	4,942	15,000	9403		13921	12252	10.94
2008	9,125	15,000	9329	9329	13776	4447	3.97
2009	USGS Data not yet available for 2009			5875			
2010							

*Influent flow numbers

** The ADWF (MGD) is **LESS** temporary flows from Adelanto of 153 MG from Aug-Dec of 2009

***If combined flows exceed 15,000 acre-feet then "VVWRA may decrease its discharge by an amount equal to the prior year's combined flow exceedance over 15,000 acre feet"

Conversion Chart

Acre Foot per Year (Ac-ft/yr)	Million Gallons per Day (MGD)
1000	0.89
2000	1.79
3000	2.68
4000	3.57
5000	4.46
Ac/ft= 325,900 gallons	

The process of installing all of the Subregional WRP facilities (WRPs, pipelines, lift stations, and percolation basins) would result in construction activities that could result in erosion and sedimentation. The State Water Resources Control Board (SWRCB) adopted the General Construction Activity Storm Water NPDES (National Pollutant Discharge Elimination System General Permit) in 1992 thereby regulating construction activity that would result in the disturbance of 5 acres or more. Water Quality Order 99-08-DWQ lowered threshold of regulated activity to one acre in 2002. The proposed Subregional WRP facilities will impact more than one acre of land and therefore, must file a Notice of Intent (NOI) with the SWRCB prior to initiation of construction activity. The General Permit requires that the project developer file a NOI with the SWRCB and authorizes discharge of stormwater associated with construction given implementation of a Storm Water Pollution Prevention Plan (SWPPP) that eliminates or reduces non-stormwater discharges to storm sewer systems and other “Waters” as defined by the Clean Water Act.

The General Permit prohibits the discharge of material other than stormwater and all discharges that contain hazardous substances in excess of reportable quantities established at 40 Code of Federal Regulations 117.3 or CFR 302.4, unless a separate NPDES permit has been issued to regulate those discharges. Regardless of the need for a construction NPDES permit, the project must implement “best management practices” (BMP) as part of the SWPPP to reduce the potential for soil erosion or pollutants leaving a construction site and adversely affecting surface water. The San Bernardino County Flood Control District, the County of San Bernardino, and the Incorporated Cities of San Bernardino County are co-permittees within the Mojave River Basin and with the Lahontan Regional Water Quality Control Board.

The Stormwater NPDES Permits require implementation of a Standard Urban Storm Water Mitigation Plan (SUSMP)/Water Quality Management Plan (WQMP) with design standards for BMPs, adopted in 2002. The BMPs to infiltrate and/or treat stormwater pollution are required to be incorporated into the design phase of new development and redevelopment in order to minimize the discharge of pollutants of concern. Such design standards ensure that stormwater runoff is managed for water quality and quantity concerns. Mitigation measures must be implemented to reduce the effects of potential impacts from stormwater pollution to a less than significant level. The intent of these measures is to accomplish the following: capture upstream sheet flow and manage it so these flows will be retained or detained on the facilities sites, or alternatively discharged downstream to an existing local/regional drainage facility with sufficient capacity to handle such flows without causing downstream flooding, erosion or sedimentation; and capture increased runoff generated from the facility sites and retain or detain these flows so that discharges will not cause or contribute substantially to downstream flood hazards, treat the discharges to ensure that man-made pollutants are not incorporated into the downstream discharges, and discharge the onsite flows into existing local/regional drainage facility with sufficient capacity to handle such flows without causing downstream flooding, erosion or sedimentation.

The mitigation measures are provided in the Mitigation Measures section below. With implementation of these design requirements on both construction activities/disturbances and the long-term occupancy of the Subregional WRP facility sites, the changes in the existing individual facility site drainage systems can be controlled to prevent significant downstream erosion and sedimentation.

d. Substantially alter the existing drainage pattern of the site or area, including through the alteration of the course of a stream or river, or substantially increase the rate or amount of surface runoff in a manner which would result in flooding onsite or offsite?

Please refer to the discussion under Issue c. above. None of the Subregional WRP facility sites is located in an area that contains a stream or river. All facility sites are located in areas that are essentially flat (the exception being the Alternative A WRP site on the edge of Oro Grande Wash), and subject to sheet flow, not concentrated surface runoff. The proposed Subregional WRP facilities will alter local drainage systems and increase runoff from the individual WRP facility sites. A potential for increased flooding existing, but mitigation measures described in Issue c. above and presented in the Mitigation Measure section below will control runoff from the facility sites in a manner to prevent the proposed project from causing or contributing to significant downstream flood hazards.

e. Create or contribute runoff water which would exceed the capacity of existing or planned stormwater drainage systems or provide substantial additional sources of polluted runoff, such as from areas of material storage, vehicle or equipment maintenance (including washing or detailing), waste handling, hazardous materials handling or storage, delivery areas, loading docks, or other outdoor areas?

For the reasons outlined under Issues c. and d. above, the proposed project will not cause or contribute surface runoff that can exceed the capacity of existing or planned stormwater drainage systems. Further, mitigation requirements to control both short- and long-term sources of water pollution or to treat the stormwater discharged from the project site will ensure that the proposed project is not a substantial source of polluted runoff.

The proposed project is a wastewater reclamation facility designed to “scalp” a portion of wastewater flows generated in the City of Hesperia and the Town of Apple Valley for treatment and then use as recycled water within each community. Because of the type of treatment facility and the backup provided by the existing Westside Regional WRP wastewater collection system, the potential for an accidental spill that could be discharged to the surrounding environment is considered to be negligible. If an accidental spill occurs within the WRP, the delivery of wastewater flows to the facility can either be stopped or rerouted back to the regional wastewater collection system. This management option ensures that the wastewater treated at the Subregional WRPs will not become a substantial additional source of polluted runoff at the two Subregional WRP sites.

f. Otherwise substantially degrade water quality?

All of the potential sources of pollution and water quality degradation have been evaluated in the previous five sections of this Subchapter. Limited degradation of groundwater quality at the percolation sites has been identified, but based on the whole of the antidegradation analysis provided under Issue a. above and in the CIP, the extent of groundwater quality degradation was determined to a less than significant impact. Future construction and operation impacts on surface water quality will be controlled through implementation of mandatory best management practices that is required to meet regulatory requirements through the implementation of a Stormwater Pollution Prevention Plan (SWPPP) during short-term construction activities and a Water Quality Management Plan (WQMP) during the long-term operations of all of the Subregional WRP facilities. No other activities have been identified in conjunction with the proposed project that could otherwise substantially degrade water quality.

g. Place housing within a 100-year flood hazard area as mapped on a federal Flood Hazard Boundary or Flood Insurance Rate Map or other flood hazard delineation map?

The proposed project does not include any residential housing. Therefore, it has no potential to expose any residential housing to a 100-year flood hazard zone.

h. Place within a 100-year flood hazard area structures which would impede or redirect flood flows?

The flood hazard data in Section 4.2 and shown on Figures 4.5-15 through 4.5-18 indicates that all but one of the Subregional WRP facility locations do not occur within a 100-year flood hazard area. The one location exposed to a 100-year flood hazard is the Apple Valley WRP, which is located just within the 100-year flood hazard area associated with Apple Valley Dry Lake. Because the type of flood hazard at this location is related to rising surface water at the Dry Lake, as opposed to flowing water in a stream, the potential exposure to flood hazards can be mitigated by incorporating flood protection design measures that will harden the proposed WRP to withstand the 100-year standing water elevation at the proposed Brewster Park location, with sufficient protection against wave action that could result if a 100-year accumulation of stormwater accumulates in Apple Valley Dry Lake. This design must maintain the operational capability of the WRP or, alternatively, ensure that if it is removed from operation for a short period of time, it can be placed back into operation after a short period of time. With implementation of this design mitigation measure, the Apple Valley Subregional WRP can be implemented without significantly impeding or redirecting flood flows.

i. Expose people or structures to significant risk of loss, injury or death involving flooding, including flooding as a result of the failure of a levee or dam?

Please refer to the discussion under Issue h. above. The type of flooding that would occur at the Apple Valley Subregional WRP, which is associated with the accumulation of stormwater runoff on Apple Valley Dry Lake, does not pose the risk of injury or death to any of the employees that may be working at the WRP. Sufficient time exists to relocate before such a flood hazard can occur. However, the WRP facility (structure) would be exposed to flood hazard and mitigation has been required to harden this facility so that it would not be exposed to significant risk of loss.

j. Inundation by seiche, tsunami, or mudflow?

Based on a review of the City of Hesperia, County of San Bernardino and Town of Apple Valley General Plans, none of the proposed Subregional WRP facility sites are exposed to inundation hazards associated with seiche, tsunami or mudflow. All of the WRP facility locations are above areas, such as the Mojave River flood plain or local creek channels that might be subject to such hazards.

<u>Utility and Service System Thresholds</u>

Exceed wastewater treatment requirements of the applicable Regional Water Quality Control Board?

Issue a. of this Subchapter and the CIP in the Technical Appendices (Volume 2) that accompany this DEIR provide a detailed evaluation of the wastewater treatment requirements related to the Lahontan Regional Board and the Lahontan Basin Plan. Based on the facts and

findings in this detailed analysis, the proposed Subregional WRP project can be implemented without exceeding any wastewater treatment requirements that may be imposed by the Lahontan Regional Board.

Require or result in the construction of new water or wastewater treatment facilities or expansion of existing facilities, the construction of which could cause significant environmental effects?

This project does not require construction of new or expansion of existing wastewater treatment facilities. The proposed project is the construction of new wastewater treatment facilities designed to meet two fundamental objectives: provide recycled water for use within two communities served by VVWRA; and eliminate the need to expand the regional wastewater collection system and the Westside Regional WRP. The proposed Subregional WRPs are the subject of this DEIR and have been developed in response to predicted future growth within the VVWRA service area which is discussed in detail under Issue a. above and in the CIP. Based on the analysis in this document, the installation of the Apple Valley and Hesperia Subregional WRP can be accomplished without causing significant unavoidable adverse environmental impacts.

Specific Issues Raised in Comment Letters Submitted in Response to the Notice of Preparation

Several specific questions regarding potential Subregional WRP project impacts were raised in two of the comment letters, the Lahontan Regional Board and the Apple Valley Ranchos Water Company. Copies of these letters are reproduced, with comment bracketing, in Appendix 8.2 of this DEIR. Summaries of comments and responses to these comments are presented in the following text.

Regional Board

Comment 7-3: This comment references the Basin Plan and requests that the DEIR address the applicable portions of the Plan with a focus on compliance with the applicable numeric, narrative water quality objectives, and prohibitions.

The facts and findings regarding the Basin Plan are addressed in Issue a. of this Subchapter and the CIA provided in whole in Volume 2 of the DEIR, Technical Appendices. The Basin Plan is specifically addressed as are those numeric and narrative water quality objectives.

Comment 7.4: This comment identifies the water quality issues that the Board indicates must be addressed in the EIR.

The facts and findings regarding water quality impacts of managing the recycled water from the Subregional WRPs is provided in Issue a. of this Subchapter and the CIA provided in whole in Volume 2 of the DEIR, Technical Appendices. The following specific issues are addressed in the referenced sections: the WRP design that verifies a minimum of secondary treatment and nutrient removal; salinity minimization; and water quality impacts to groundwater that will be affected by the proposed project. Surface water quality management is addressed under Issues c. and e. of this Subchapter.

Comment 7.5: This comment requests that methods of control measures to minimize plant upsets or accidental discharges of untreated wastewater or other chemicals be addressed in the EIR.

This comment raises an issue related to accidental discharges of untreated wastewater or other chemicals from the proposed Subregional WRPs. The proposed Subregional WRPs are "scalping" plants that will utilize the liquid component of the wastewater and deliver the solids back into the regional interceptor for treatment at the Westside Regional WRP. If an accidental release of wastewater occurs the wastewater deliveries from the regional collections system can be stopped and any spilled wastewater can be diverted back to the collection system. Regarding potential for chemical spills, the proposed project is using ultraviolet disinfection which eliminates that chemical of most concern, which is chlorine. Other chemicals are managed just like any commercial business than handles hazardous materials, i.e., chemicals are properly stored; employees are trained to minimize potential spills and to respond immediately if a spill occurs; and since these materials will all be handled indoors at the Subregional WRPs, a minimal potential exists for accidental spills to expose humans to any significant hazards. Within the plant, all chemicals will be stored in double containment and utilize instrumentation (level sensors for storage tanks/feedback instrumentation, residual analyzers, etc.) to confirm dosing.

Further, both of these facilities are highly automated MBR plants. On-line, continuous monitoring of turbidity will be used to provide instant feedback on the performance of the plants. For example, should NTU rise above a set point, the operator will be sent an alarm to investigate performance. Should the set point be exceeded, the plant will be automatically taken out of service and cease production/discharge of "untreated wastewater." Influent pumps will be interlocked to the internal alarm and power shut off. Typical daily samples will be taken for BOD and TSS and used to verify performance/compliance.

Comment 7-6: This comment identifies the potential impacts from managing sewage solids that the Board indicates must be addressed in the EIR.

Sewage solids will continue to be managed as they are now because the solids will be discharged and transported to the Westside Regional WRP through the existing regional sewage collection system. VVWRA constructed significant improvements for the 14.5 and 18 mgd capacity expansion project to process solids resulting from the Subregional WRPs. This included four new primary clarifiers, a dissolved air flotation thickener for primary solids and an additional one million gallons in anaerobic digestion capacity. VVWRA has the existing infrastructure in place at this time to process and transport solids generated from the Subregional WRPs proposed by this project.

Comment 7-7: This comment requests detailed information on how compliance with Title 22 will be achieved, including information that can be incorporated into the Salt and Nutrient Management Plan being developed for the Alto Subbasin and native water quality in the Subbasin.

The facts and findings regarding Title 22 compliance of the recycled water generated from the Subregional WRPs is provided in Issue a. of this Subchapter and the CIA provided in whole in Volume 2 of the DEIR, Technical Appendices. VVWRA in conjunction with MWA will be collaborating on the creation of a Salt Nutrient Management Plan (SNMP) for the Alto Subbasin. Currently, MWA is working on its Urban Water Management Plan. It is currently planned to begin the SNMP in the Spring of 2011. Both agencies will utilize information contained within the Regional Water Management Plan, Mojave River Characterization Study and the Cumulative Impact Analysis to develop the outline for the SNMP. Also, currently Larry Walker

and Associates is preparing the formal Title 22 report for submission to CDPH and Lahontan RWQCB.

Comment 7-8: This comment identifies the Mojave Hydrologic Unit Prohibition No. 4 prohibition and discusses the exemption criteria language as it will apply to the proposed project and indicates this issue must be addressed in the EIR.

In 2003 the Lahontan Regional Board adopted a resolution revising the prohibition exemption criteria for waste discharge in the Mojave Hydrologic Unit in San Bernardino County. This resolution was based on the rapid growth in the area of the Mojave River Watershed and increased demand for water, combined with the fact that the River is mostly dry and area residents rely on groundwater for agricultural and municipal needs.

As described in MWA's 2004 RWMP, the groundwater resources within the Mojave River Basin are in overdraft and this overdraft is increasing. The clarifying language to the prohibition exemptions ratified by the referenced resolution allows the discharge of wastewater in the San Bernardino Mountains portion of the Basin where there is significant need to increase water supplies for a variety of uses, including fire suppression, industrial cooling, and groundwater recharge.

More importantly and more closely related to the service area of VVWRA is the fact that this amendment provided clarifying language in the prohibition exemptions currently contained in the Basin Plan for the Mojave Hydrologic Unit, Prohibition Nos. 1, 2, and 4. This new language allows for discharge of wastewater currently prohibited in the upper watershed of the Mojave River and to allow discharge of wastewater to the Mojave River and its tributaries above the Lower Narrows at Victorville. This could allow local sewage treatment plants to be built that would discharge directly to the River, which according to the SWRCB, could facilitate protection of aquatic and riparian habitat in this essentially dry river system and help recharge the floodplain aquifer.

As a result of the change, the Regional Board has the flexibility to grant exemption if it can be shown that wastewater discharge does not negatively affect designated beneficial uses of the Mojave River. Since the proposed project will not directly discharge to the River, it should not require or have to rely upon an exemption.

Comment 7-9: This comment identifies project's potential to adversely impact the riparian habitat downstream of VVWRA's regional facility and the specific topics that the Board indicates must be addressed in the EIR.

The Subregional WRP impacts to the riparian habitat in the Transition Zone are addressed under Issue a. of this Subchapter. In addition, the analysis addresses the effect on the Westside Regional WRP; changes in future flows; and a finding that no adverse impacts should affect any of these resources or facilities.

Comment 7-10: This comment identifies the potential water quality and hydrology impacts to groundwater in the vicinity of the percolation ponds and the issues that the Board indicates must be addressed in the EIR.

Hydrology and water quality analyses are evaluated under Issue a. of this Subchapter, based on the data available. Potential environmental effects are characterized and potential effects on groundwater quality in the vicinity of the percolation basins is assessed and determined to a

less than significant impact. Specific recycled water users have not been identified. However, typical recycled water uses include publicly landscaped areas, including landscape medians, parks, and other facilities; and golf courses. A more detailed list of potential recycled water users is provided in the following report which is available at VVWRA: Boyle Engineering Corporation, 2005. Planning and Environmental Services to Develop Subregional Reclamation Facilities. January, 2005. Also, since applications of recycled water for either landscape irrigation or industrial uses will be managed to minimize discharge to the groundwater aquifer, the impacts are expected to be less than that forecast for the percolation basins.

Comment 7-11: This comment identifies the types of changes to the above water quality and hydrology issues that the Board indicates must be addressed in the EIR.

Water quality analyses are evaluated under Issue a. of this Subchapter, based on the data available.

Apple Valley Ranchos Water Company

Comment 8-2: This comment focuses on project objectives and the failure to identify specific end users other than percolation.

As noted in Chapter 2 of this document (response to this comment), specific recycled water users have not been identified. However, typical recycled water uses include publicly landscaped areas, including landscape medians, parks, and other facilities; and golf courses. A more detailed list of potential recycled water users is provided in the following report which is available at VVWRA: Boyle Engineering Corporation, 2005. Planning and Environmental Services to Develop Subregional Reclamation Facilities. January, 2005.

Comment 8-3: This comment focuses on general objective #3 as stated in the project Initial Study. It raises questions regarding adequacy of the existing treatment facilities and allowance of future growth.

The future growth issue is addressed under Issue a. in this Subchapter, in the CIA and in the Population and Housing Subchapter (Chapter 4.7) of this DEIR. Fundamentally, the installation of the proposed project has no potential to cause or induce growth. It may reduce future need to import water, but based on historic growth patterns, including the current substantial reduction in growth due to the economy, population growth appears to occur independent of water supply availability.

Comment 8-4/5: This comment raises the issue of balancing recycled water discharges to meet Town and City requirements with the necessity to meet downstream obligations (make-up assessments). It asks that this issue be addressed in the EIR along with the change in the location of discharge relative to with the habitat supported downstream of the existing Westside WRP discharges.

The ability to balance recycled water production and use with downstream obligations is addressed under Issues a. and b. of this Subchapter. Based on the facts and findings in these evaluations, there is sufficient flow at present and forecast in the future to meet both needs.

Comment 8-6: This comment suggests utilizing the CDPH draft regulations for recharge of groundwater with recycled municipal wastewater as the starting point for evaluation of the project's groundwater impacts.

VVWRA is not pursuing indirect reuse and it is not an option in the existing adjudication; therefore, the only issue related to disposal of recycled water in the percolation basins (as a back-up to direct use) is to show that there is sufficient distance between production wells and the Subregional WRP percolation basin sites to satisfy CDPH requirements. VVWRA does not intend to pursue diluent water as this is not the goal or intent of the proposed project at this time. To do this would add an additional complexity to the proposed project that is not the purpose at this time. The data in the CIA and that summarized under Issue a. of this Subchapter verify that the travel time from the percolation basins to the nearest wells is many years. Therefore, VVWRA believes that the percolation basins, serving as a backup recycled water management component, do not require consideration of this disposal as recharge of groundwater with municipal wastewater.

Comment 8-7: This comment requests that the DEIR include an evaluation of more difficult to treat trace constituents and suggests analysis of the Town's wastewater to determine if there are any constituents of concern.

Please refer to the discussion of this topic under Issue a. of this Subchapter and the CIA. These constituents are analyzed and found to pose a less than significant impact to groundwater quality based on this analysis and the groundwater transport calculations.

Comment 8-8: This comment identifies prospective salt and nutrient management plans that may be prepared for the local basin and sub-basin. Salt and nutrient effects from percolation ponds should be addressed in the DEIR.

The facts and findings regarding Salt Nutrient Management Plan issues are provided under Issue a. of this Subchapter and the CIA provided in whole in Volume 2 of the DEIR, Technical Appendices. VVWRA in conjunction with MWA will be collaborating on the creation of a Salt Nutrient Management Plan (SNMP) for the Alto Subbasin. Currently, MWA is working on its Urban Water Management Plan. It is currently planned to begin the SNMP in the Spring of 2011. Both agencies will utilize information contained within the Regional Water Management Plan, Mojave River Characterization Study and the Cumulative Impact Analysis to develop the outline for the SNMP.

Comment 8-9: This comment identifies CECs as an issue of concern related to percolation of recycled municipal wastewater.

Please refer to the discussion of this topic under Issue a. of this Subchapter and the CIA. These constituents are analyzed and found to pose a less than significant impact to groundwater quality based on this analysis and the groundwater transport calculations.

Comment 8-10: This comment expresses concerns regarding specific wells operated by Apple Valley Ranchos (AVR) in the vicinity of the proposed percolation ponds. Two questions are raised; first, will there be negative effects on groundwater quality due to introduction of nitrogen from percolation; and second, why not immediately treat the recycled water to meet the 5 mg/L nitrogen limit?

The facts and findings regarding Salt Nutrient Management Plan issues are provided under Issue a. of this Subchapter and the CIA provided in whole in Volume 2 of the DEIR, Technical Appendices. Basically, the analysis indicates that the distance between the percolation ponds in both communities and the nearest wells will prevent any interaction between the two for many years. In addition, the findings for nitrate degradation indicate that the 5 mg/L nitrogen limit is not required at this time. Based on the economic analysis presented in the referenced facts and findings, the economic cost of treating the wastewater to a 5 mg/L level is not justified at this

time. In addition, the engineers indicate that the plant is designed to operate using a 4-stage Bardenpho process if required to meet the 5 mg/L level. The need for supplemental carbon would be determined based on actual C/N ratios of the influent, but it could lead to additional costs beyond those discussed in the CIA.

Comment 8-11: This comment raises the issue of suitability of the sediments below the proposed percolation sites to accept the recycled municipal wastewater, including concerns regarding the extension of clay deposits below a depth of about 35 feet.

The facts and findings regarding transport of the percolated recycled water are provided under Issue a. of this Subchapter and the CIA provided in whole in Volume 2 of the DEIR, Technical Appendices. Based on these findings, the time and distance to the nearest Apple Valley Ranchos wells is many years and the recycled water does not pose any threat or hazard to local groundwater based on the level of treatment to be provided by the Apple Valley Subregional WRP. According to VVWRA, once the final percolation basin location is selected for this WRP, detailed borings and other relevant information can be obtained to determine the best way of managing the basin over the long-term.

Comment 8-12: This comment requests modeling to determine the direction and time of detention between the percolation sites and nearby groundwater wells.

The facts and findings regarding transport of the percolated recycled water are provided under Issue a. of this Subchapter and the CIA provided in whole in Volume 2 of the DEIR, Technical Appendices. Quantitative calculations of transport time are provided in the referenced sections.

Comment 8-13: This comment indicates that the PDR does not include a design for recharge, but primarily for irrigation. It also raises the issue of the volume of recycled water that should be evaluated as part of the EIR.

The facts and findings regarding transport of the percolated recycled water are provided under Issue a. of this Subchapter and the CIA provided in whole in Volume 2 of the DEIR, Technical Appendices.

Comment 8-14: This comment identifies the possible necessity for a storage reservoir to support the recycled water irrigation system.

VVWRA has conferred with the City of Hesperia and Town of Apple Valley. These agencies have assumed responsibility for determining whether and where a recycled water storage reservoir may be installed. Therefore, this facility is not evaluated as part of the DEIR.

Comment 8-15: This comment raises two questions: first, what barriers would protect adjacent park and residential neighbors from a massive overflow for a plant failure; and will a proposed lift station and force main transfer the full volume of sewage to the existing Westside Plant?

Please refer to response 7-5 above in a comment posed by the Regional Board. The full lift station and main connection to the regional collection system will be capable of delivering the full wastewater flows to the Westside Regional WRP.

Comment 8-16: This comment asks what agency will be the purveyor of the recycled water in AVR's service territory.

At this time the City and Town will be provided the recycled water for distribution.

Comment 8-17/18: This comment identifies existing reclaimed water lines within the service area and discusses potential customers that can use the recycled water for irrigation.

VVWRA expects that existing recycled water infrastructure will be used for delivery of recycled water to minimize costs. However, such decisions would be left to the Town based on future demand and location of future recycled water users. The future recycled water delivery system is a local issue, similar to location of local sewer lines, and VVWRA is only responsible for delivery of the recycled water to the party distributing it for use.
This concludes the analysis and discussion of potential impacts from implementing the Subregional WRP project.

4.5.4 Mitigation Measures

Based on the analysis in Section 4.5.3 of hydrology and water quality impacts, the following mitigation measures are recommended for implementation. Note that the discussion of regulatory requirements for monitoring groundwater in the vicinity of the proposed percolation basins identified required monitoring and these requirements are not reiterated in this discussion of mitigation measures.

4.5-1 ***The construction contractor shall prepare and implement a Storm Water Pollution Prevention Plan (SWPPP) which specifies Best Management Practices that will be implemented to prevent construction pollutants from contacting stormwater with the intent of keeping all products of erosion from moving offsite. The SWPPP shall be developed with the goal of achieving a reduction in pollutants both during and following construction to control urban runoff to the maximum extent practicable based on available, feasible best management practices. The SWPPP and the monitoring program for the construction projects shall be consistent with the requirements of the latest version of the State's General Construction Activity Storm Water Permit and NPDES Permit No. CAS618036, Order No. R8-2002-0012 for projects within San Bernardino County.***

The following items should be included in the SWPPP:

- ***The length of trenches which can be left open at any given time should be limited to that needed to reasonably perform construction activities. This will serve to reduce the amount of backfill stored onsite at any given time.***
- ***Backfill material should not be stored in areas which are subject to the erosive flows of water.***
- ***Measures such as the use of straw bales, sandbags, silt fencing or detention basins shall be used to capture and hold eroded material for future cleanup.***
- ***Rainfall will be prevented from entering material and waste storage areas and pollution-laden surfaces.***
- ***Construction-related contaminants will be prevented from leaving the site and polluting waterways.***
- ***Replanting and hydroseeding of native vegetation will be implemented to reduce slope erosion and filter runoff.***
- ***A spill prevention control and remediation plan to control release of hazardous substances.***

4.5-2 The site design for Subregional WRP Project facilities shall prepare and implement a Water Quality Management Plan (WQMP) which specifies Best Management Practices that will be implemented to prevent long-term surface runoff from discharge of pollutants from sites on which construction has been completed. The WQMP shall be developed with the goal of achieving a reduction in pollutants following construction to control urban runoff pollution to the maximum extent practicable based on available, feasible best management practices.

4.5-3 Any future Subregional WRP Project facilities that will be installed at a location where flood hazards may occur, must be hardened to withstand the defined flood hazard so that the facility can continue to operate or be available to be placed into immediate operation following the flooding.

4.5-4 For long-term mitigation of site disturbances at Subregional WRP facility locations, all areas not covered by structures shall be covered with hardscape (concrete, asphalt, gravel, etc.), native vegetation and/or man-made landscape areas (for example, grass). Revegetated or landscaped areas shall provide sufficient cover to ensure that, after a two year period, erosion will not occur from concentrated flows (rills, gully, etc.) and sediment transport will be minimal as part of sheet flows.

4.5-5 Within each facility or project associated with the Subregional WRP Project that will impact more than one acre, surface runoff from upstream shall be collected and discharged in a manner downstream of the site that does not increase downstream flood hazards. Onsite surface runoff shall be collected and retained (for use onsite) or detained and percolated into the ground on the site such that site development results in no net increase in offsite stormwater flows. Detainment shall be achieved through Low Impact Development techniques whenever possible, and shall include techniques that remove the majority of urban storm runoff pollutants, such as petroleum products and sediment. The purpose of this measure is to remove the onsite contribution to cumulative urban storm runoff and ensure the discharge from the sites is treated to reduce contributions of urban pollutants to downstream flows and to groundwater. If it is not possible to eliminate stormwater flows from leaving a site, the facility shall not be constructed until a drainage study has been conducted that verifies that there will be no adverse impacts to downstream stormwater management from implementation of the site development.

Although the analysis in the DEIR did not identify potential for significant impacts to groundwater resources in the Alto Subbasin, the following measures are identified as contingency measures to be brought forward if the modeling analysis provided in the CIA does not reflect actual future conditions.

4.5-6 Under no circumstance shall discharge of recycled water cause or contribute to a cumulative violation of the 2005 Basin Plan maximum benefit objectives or interfere with a designated beneficial use for a water or groundwater body. In addition to monitoring, the VVWRA will use models to forecast future TDS and Nitrate concentrations pursuant to the Basin Plan and Title 22 permit requirements. VVWRA will, based on monitoring, begin the planning to develop measures to either protect beneficial uses of groundwater or to treat groundwater to meet beneficial use requirements if a violation appears imminent.

4.5-7 Hydrogeologic studies, including modeling, will be completed for each percolation basin site to define the impacts from percolating the recycled water on known groundwater quality. If modeling demonstrates that contamination of a downstream well associated with such percolation expansion will adversely impact groundwater or water production capabilities, the recharge facility shall be closed and moved to an

alternative location where such impacts will not occur or other adaptive management programs shall be implemented.

4.5-8 All water recharge operations shall be monitored, and if impacts that were not forecast to occur as a result of recycled water recharge operations cause unexpected significant adverse impact on the groundwater aquifer, the recharge operations shall be terminated or modified to eliminate the adverse impact.

With implementation of the above mitigation measures the potential adverse water quality impacts from implementing the VVWRA Subregional WRP Project can be controlled to a less than significant impact level.

4.5.5 Cumulative Impact

Based on the evaluation contained in this subchapter, implementation of the proposed project is not forecast to cause any cumulatively considerable adverse environmental impacts on hydrology and water quality resource issues with implementation of the required mitigation measures. The use of recycled water with some return to the Alto Subbasin groundwater aquifer is forecast to benefit groundwater resources, and it is not forecast to cause a cumulatively considerable change in groundwater quality in the areas where it may be utilized. Because proposed project will be required to implement the above measures and comply with low impact development requirements of the Regional Board's MS4 permits, future projects implemented under the Subregional WRP Project are not forecast to substantially increase stormwater runoff within the project area or cause significant degradation of surface water quality. The findings of the cumulative evaluation provided in the LWA CIA indicate that the proposed recycled water management activities will not cause a cumulatively considerable, or significant adverse impact to the groundwater resources of the Alto Subbasin or other basins within the Mojave River Basin, if the Subregional WRP project recycled water is managed in accordance with the assumptions and mitigation measures outlined in this Subchapter of the DEIR.

4.5.6 Unavoidable Adverse Impacts

Implementing the proposed Subregional WRP Project is not forecast to cause any direct or indirect significant adverse hydrology or water quality impacts with implementation of the required mitigation measures and the contingency measures, if required. The proposed project will result in unavoidable short-term changes in the hydrology and water quality of the Alto Subbasin, but the WRP design and identified mitigation measures will reduce these potential to a less than significant level. Long-term (permanent) changes in storm flows at Subregional WRP facility sites will also be controlled to a less than significant level, including the Apple Valley WRP location.

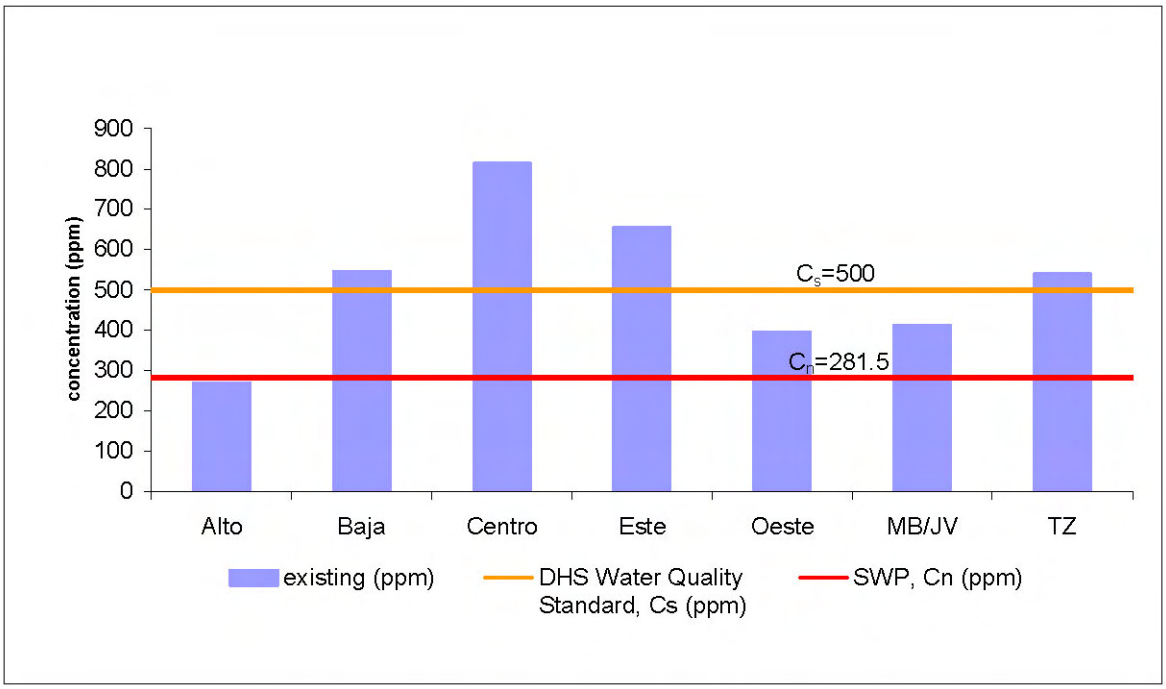

Figure 4.5-6: Total Dissolved Solids

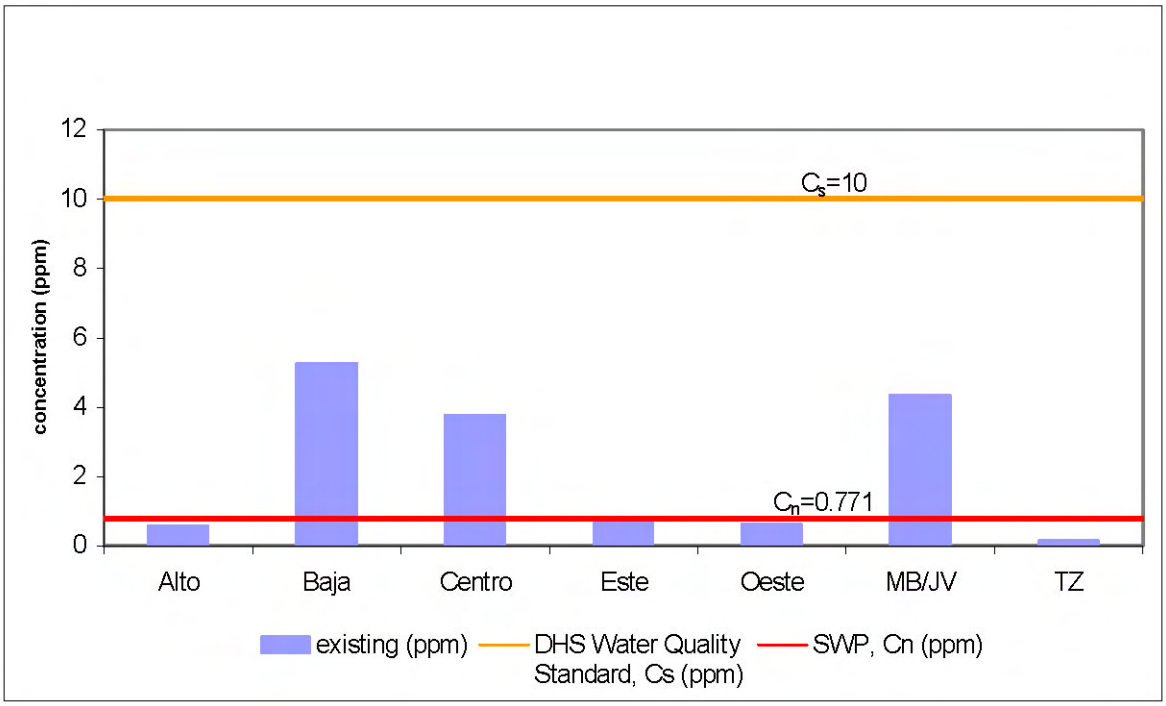

Figure 4.5-7: Nitrates

Source: Mojave Water Agency, 2004 Regional Water Management Plan

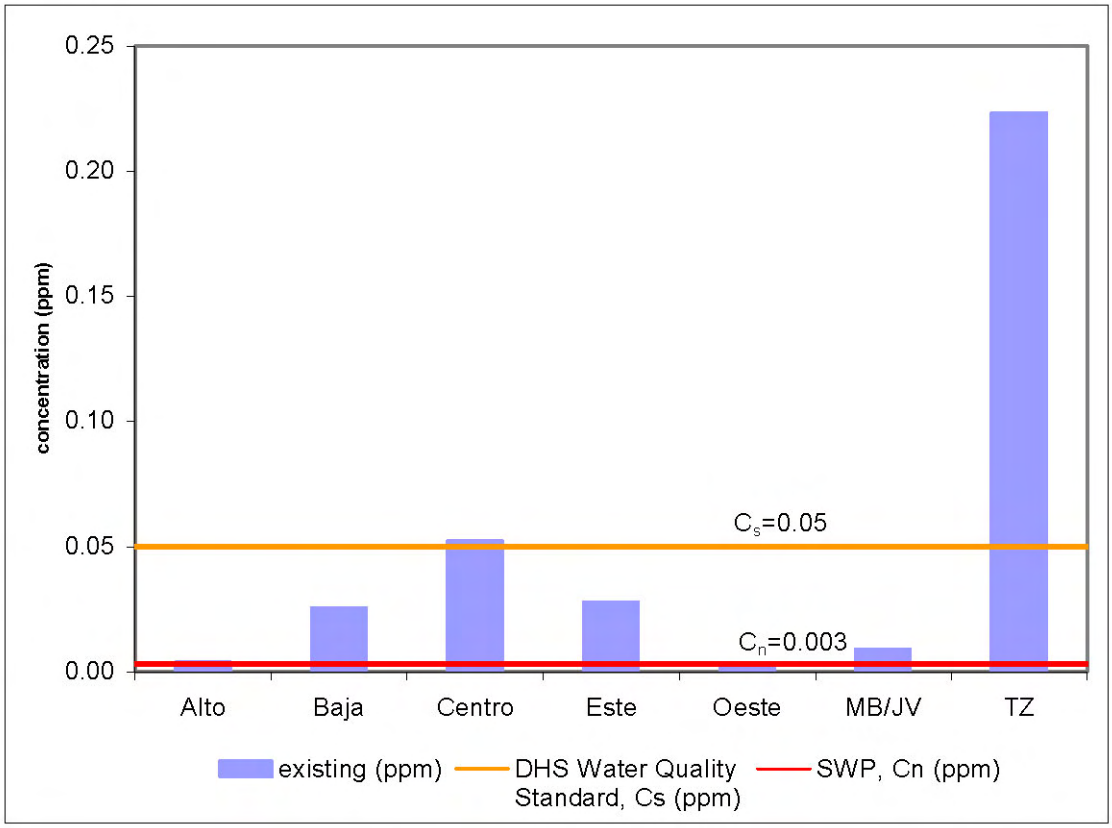

Figure 4.5-8: Manganese

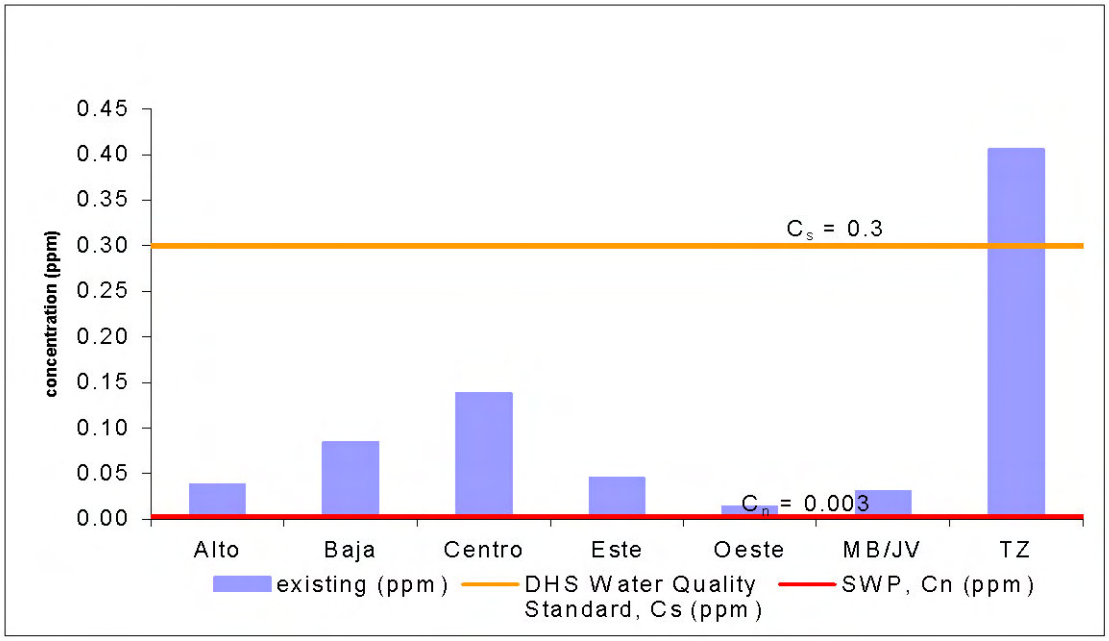

Figure 4.5-9: Iron

Source: Mojave Water Agency, 2004 Regional Water Management Plan

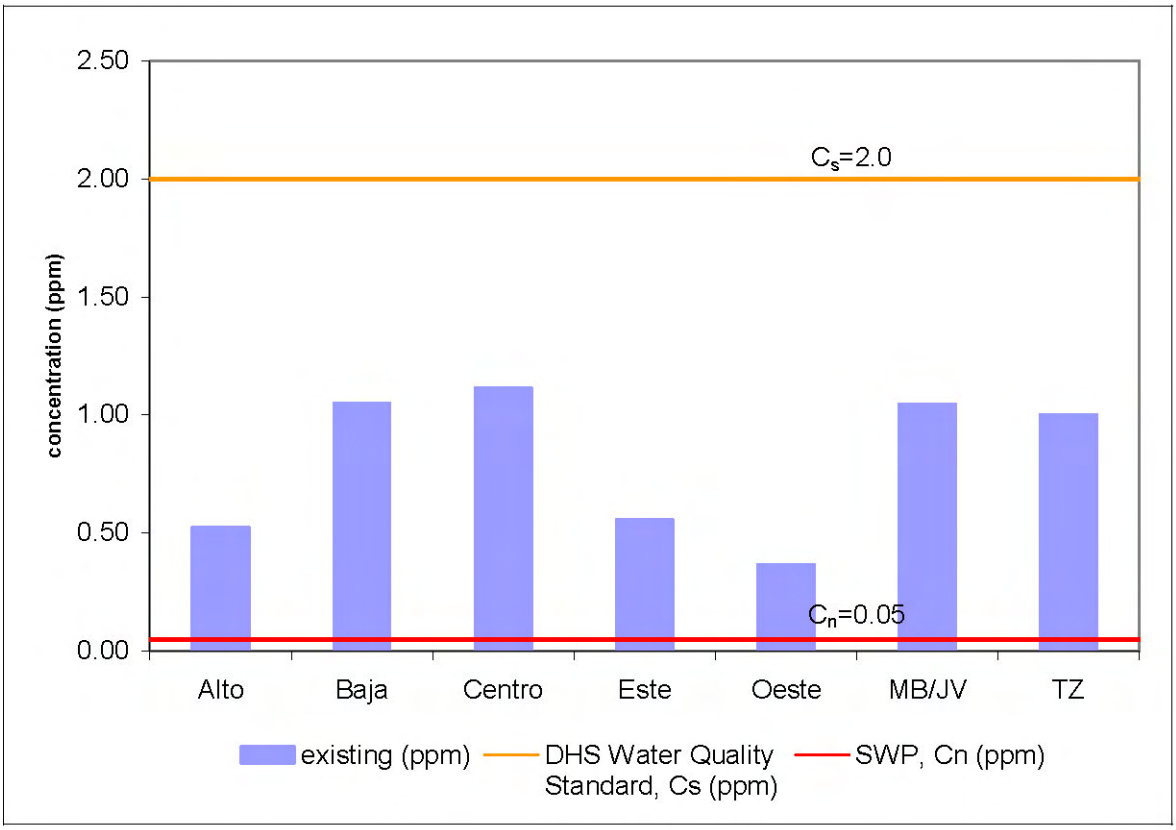

Figure 4.5-10: Fluoride

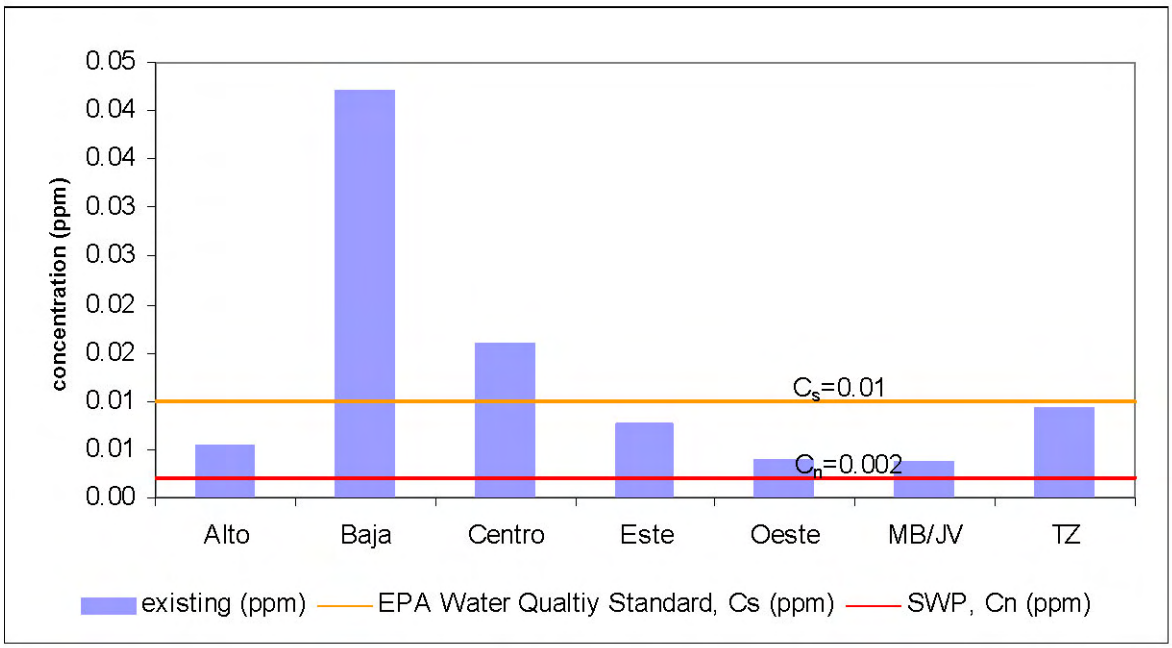

Figure 4.5-11: Arsenic

Source: Mojave Water Agency, 2004 Regional Water Management Plan

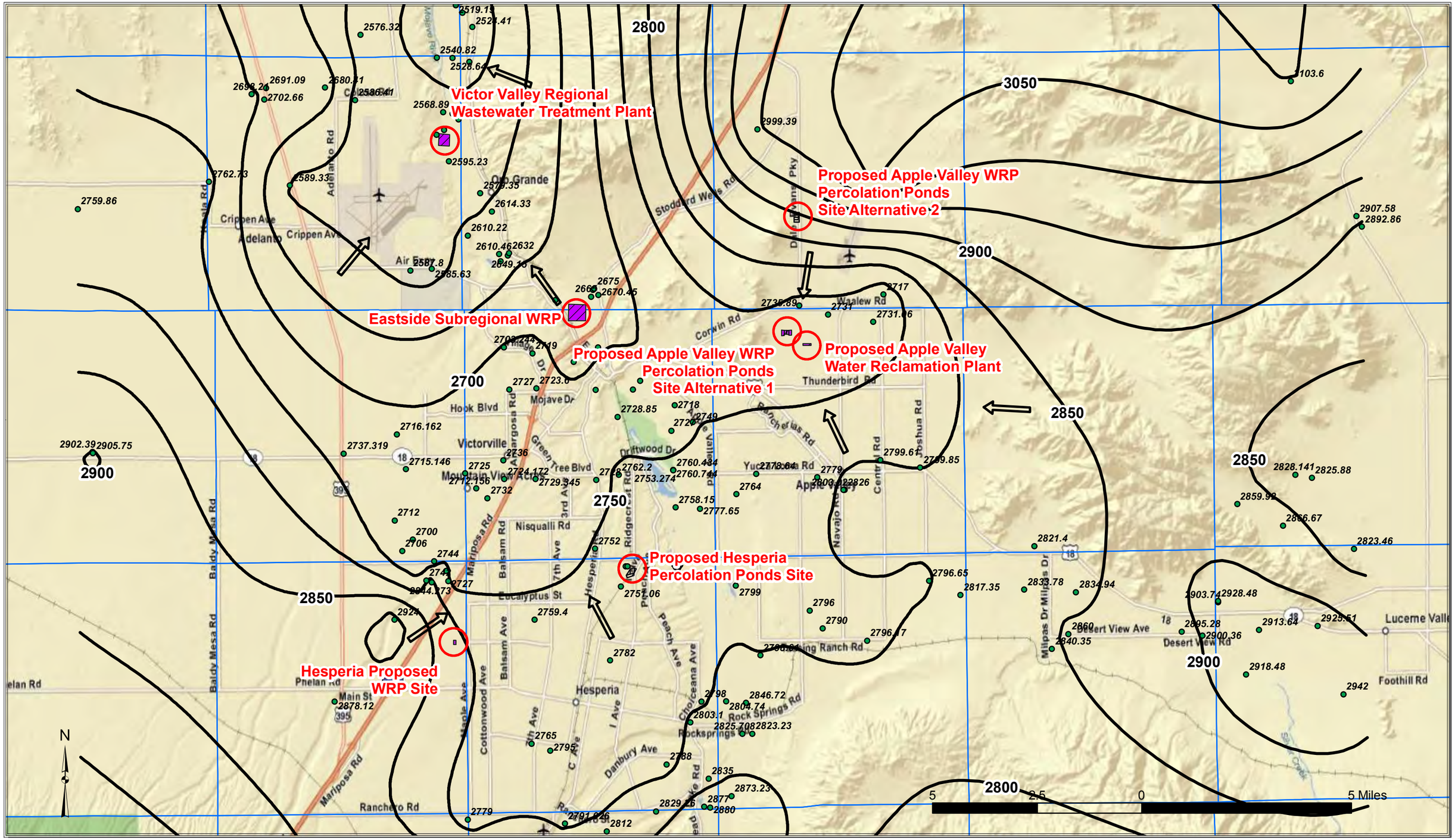

FILE: \\server_pe2900\Clerical\2009 Job Files\09-059\Data\WLEcontouring\Spring2008.mxd Date: 10/30/2009

DATE: 2/17/2006 1:18:55 PM

LUHDORFF & SCALMANINI
CONSULTING ENGINEERS

FIGURE 4.5-12
Contours of Equal Groundwater Elevation (ft, msl NGVD29)
Spring, 2008

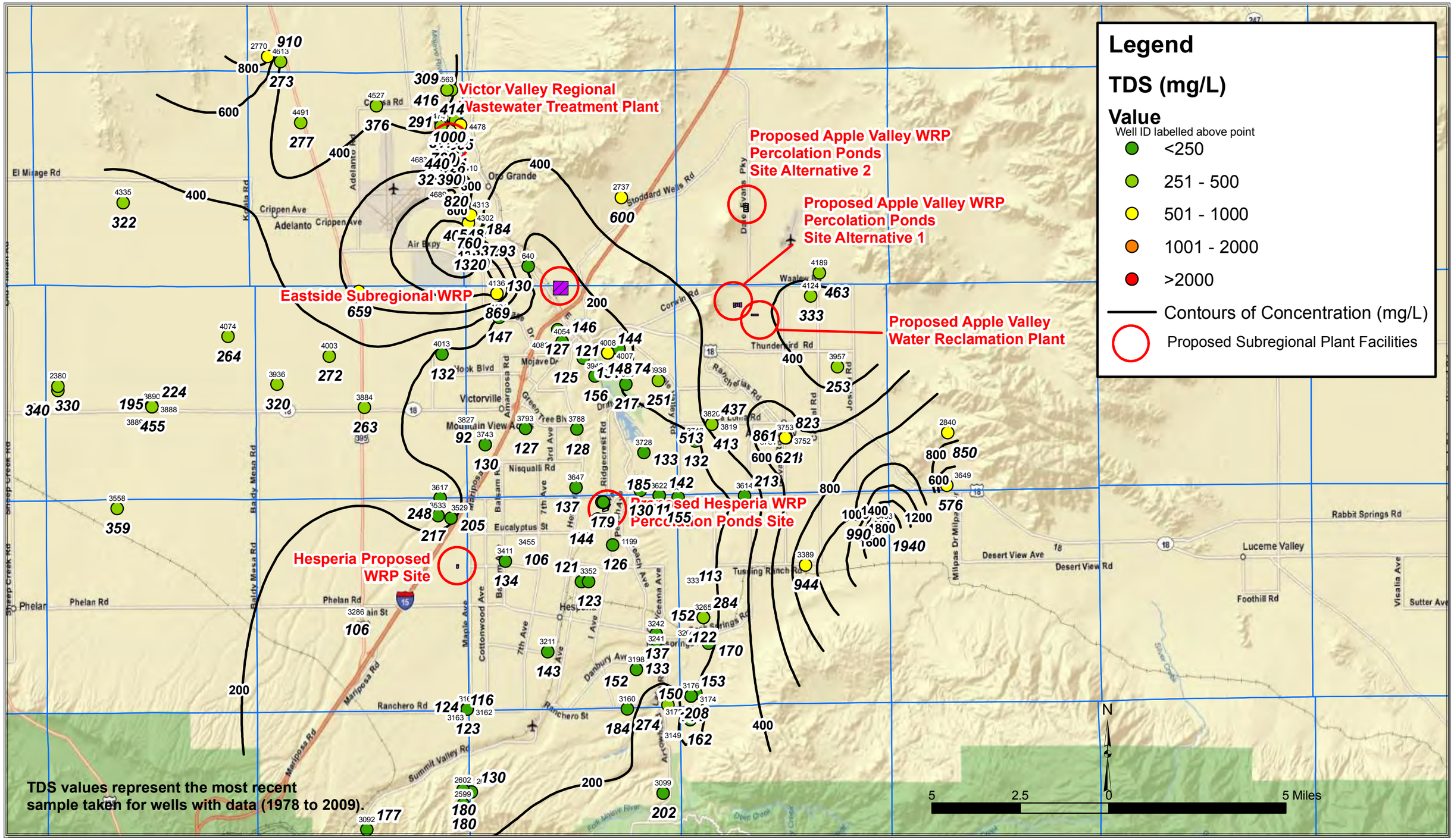

FILE: \\server_pe2900\Clerical\2009 Job Files\09-059\Data\GIS\WQ_tds.mxd Date: 10/30/2009

LUHDORFF & SCALMANINI CONSULTING ENGINEERS

FIGURE 4.5-13

Contours of Composite Total Dissolved Solids Concentrations (mg/L)

VVWRA

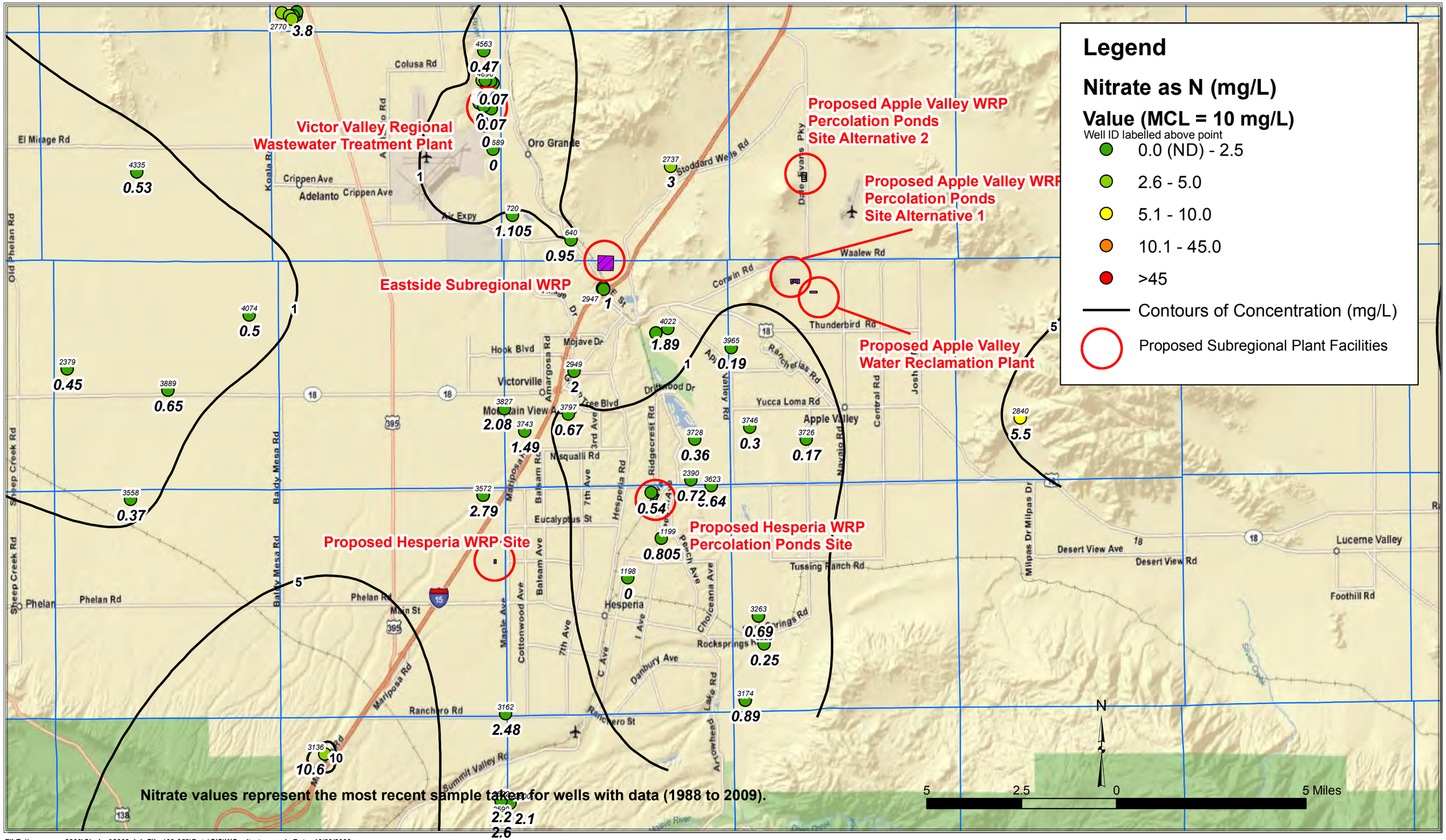

FILE: \\server_pe2900\Clerical\2009 Job Files\09-059\Data\GIS\WQ_nitraten.mxd Date: 10/30/2009

LUHDORFF & SCALMANINI CONSULTING ENGINEERS

FIGURE 4.5-14

Contours of Composite Nitrate as N Concentrations (mg/L)

VVWRA

NOTES TO USERS

This map is for use in administering the National Flood Insurance Program. It does not necessarily identify all areas subject to flooding, particularly from local drainage sources of small size. The **community map repository** should be consulted for possible updated or additional flood hazard information.

To obtain more detailed information in areas where **Base Flood Elevations** (BFEs) and/or **floodways** have been determined, users are encouraged to consult the Flood Profiles and Floodway Data and/or Summary of Stillwater Elevations tables contained within the Flood Insurance Study (FIS) report that accompanies this FIRM. Users should be aware that BFEs shown on the FIRM represent rounded whole-foot elevations. These BFEs are intended for flood insurance rating purposes only and should not be used as the sole source of flood elevation information. Accordingly, flood elevation data presented in the FIS report should be utilized in conjunction with the FIRM for purposes of construction and/or floodplain management.

Coastal Base Flood Elevations shown on this map apply only landward of 0.0' North American Vertical Datum of 1988 (NAVD 88). Users of this FIRM should be aware that coastal flood elevations are also provided in the Summary of Stillwater Elevations tables in the Flood Insurance Study report for this jurisdiction. Elevations shown in the Summary of Stillwater Elevations tables should be used for construction and/or floodplain management purposes when they are higher than the elevations shown on this FIRM.

Boundaries of the **floodways** were computed at cross sections and interpolated between cross sections. The floodways were based on hydraulic considerations with regard to requirements of the National Flood Insurance Program. Floodway widths and other pertinent floodway data are provided in the Flood Insurance Study report for this jurisdiction.

Certain areas not in Special Flood Hazard Areas may be protected by **flood control structures**. Refer to Section 2.4 "Flood Protection Measures" of the Flood Insurance Study report for information on flood control structures for this jurisdiction.

The **projection** used in the preparation of this map was Universal Transverse Mercator (UTM) zone 11 North. The **horizontal datum** was NAD 83, GRS80 spheroid. Differences in datum, spheroid, projection or UTM zones used in the production of FIRMs for adjacent jurisdictions may result in slight positional differences in map features across jurisdiction boundaries. These differences do not affect the accuracy of this FIRM.

Flood elevations on this map are referenced to the North American Vertical Datum of 1988. These flood elevations must be compared to structure and ground elevations referenced to the same **vertical datum**. For information regarding conversion between the National Geodetic Vertical Datum of 1929 and the North American Vertical Datum of 1988, visit the National Geodetic Survey website at http://www.ngs.noaa.gov or contact the National Geodetic Survey at the following address:

NGS Information Services
NOAA, N/NGS12
National Geodetic Survey
SSMC-3, #9202
1315 East-West Highway
Silver Spring, Maryland 20910-3282
(301) 713-3242

To obtain current elevation, description, and/or location information for **bench marks** shown on this map, please contact the Information Services Branch of the National Geodetic Survey at **(301) 713-3242**, or visit its website at http://www.ngs.noaa.gov.

Base map information shown on this FIRM was derived from digital orthophotography collected by the U.S. Department of Agriculture Farm Service Agency. This imagery was flown in 2005 and was produced with a 1-meter ground sample distance.

This map may reflect more detailed and up-to-date stream channel configurations than those shown on the previous FIRM for this jurisdiction. The floodplains and floodways that were transferred from the previous FIRM may have been adjusted to confirm to these new stream channel configurations. As a result, the Flood Profiles and Floodway Data tables in the Flood Insurance Study Report (which contains authoritative hydraulic data) may reflect stream channel distances that differ from what is shown on this map.

Corporate limits shown on this map are based on the best data available at the time of publication. Because changes due to annexations or de-annexations may have occurred after this map was published, map users should contact appropriate community officials to verify current corporate limit locations.

Please refer to the separately printed **Map Index** for an overview map of the county showing the layout of map panels; community map repository addresses; and a Listing of Communities table containing National Flood Insurance Program dates for each community as well as a listing of the panels on which each community is located.

Contact the **FEMA Map Service Center** at 1-800-358-9616 for information on available products associated with this FIRM. Available products may include previously issued Letters of Map Change, a Flood Insurance Study report, and/or digital versions of this map. The FEMA Map Service Center may also be reached by Fax at 1-800-358-9620 and its website at http://msc.fema.gov/.

If you have **questions about this map** or questions concerning the National Flood Insurance Program in general, please call **1-877-FEMA MAP** (1-877-336-2627) or visit the FEMA website at http://www.fema.gov.

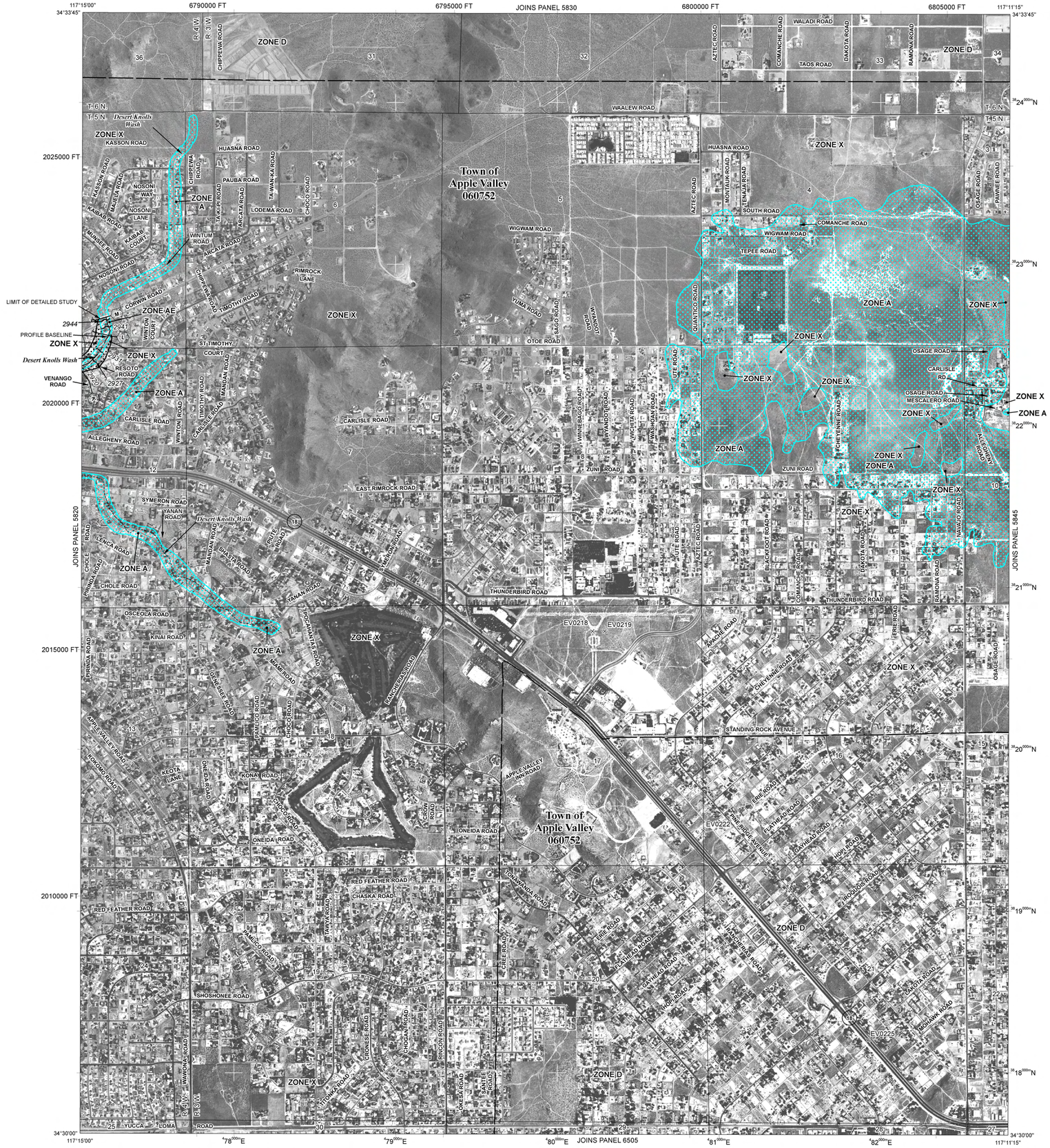

FIGURE 4.5-15

LEGEND

SPECIAL FLOOD HAZARD AREAS SUBJECT TO INUNDATION BY THE 1% ANNUAL CHANCE FLOOD

The 1% annual flood (100-year flood), also known as the base flood, is the flood that has a 1% chance of being equaled or exceeded in any given year. The Special Flood Hazard Area is the area subject to flooding by the 1% annual chance flood. Areas of Special Flood Hazard include Zones A, AE, AH, AO, AR, A99, V, and VE. The Base Flood Elevation is the water-surface elevation of the 1% annual chance flood.

ZONE A	No Base Flood Elevations determined.
ZONE AE	Base Flood Elevations determined.
ZONE AH	Flood depths of 1 to 3 feet (usually areas of ponding); Base Flood Elevations determined.
ZONE AO	Flood depths of 1 to 3 feet (usually sheet flow on sloping terrain); average depths determined. For areas of alluvial fan flooding, velocities also determined.
ZONE AR	Special Flood Hazard Area formerly protected from the 1% annual chance flood by a flood control system that was subsequently decertified. Zone AR indicates that the former flood control system is being restored to provide protection from the 1% annual chance or greater flood.
ZONE A99	Area to be protected from 1% annual chance flood by a Federal flood protection system under construction; no Base Flood Elevations determined.
ZONE V	Coastal flood zone with velocity hazard (wave action); no Base Flood Elevations determined.
ZONE VE	Coastal flood zone with velocity hazard (wave action); Base Flood Elevations determined.

FLOODWAY AREAS IN ZONE AE

The floodway is the channel of a stream plus any adjacent floodplain areas that must be kept free of encroachment so that the 1% annual chance flood can be carried without substantial increases in flood heights.

OTHER FLOOD AREAS

ZONE X — Areas of 0.2% annual chance flood; areas of 1% annual chance flood with average depths of less than 1 foot or with drainage areas less than 1 square mile; and areas protected by levees from 1% annual chance flood.

OTHER AREAS

ZONE X — Areas determined to be outside the 0.2% annual chance floodplain.

ZONE D — Areas in which flood hazards are undetermined, but possible.

COASTAL BARRIER RESOURCES SYSTEM (CBRS) AREAS

OTHERWISE PROTECTED AREAS (OPAs)

CBRS areas and OPAs are normally located within or adjacent to Special Flood Hazard Areas.

1% annual chance floodplain boundary

0.2% annual chance floodplain boundary

Floodway boundary

Zone D boundary

CBRS and OPA boundary

Boundary dividing Special Flood Hazard Area Zones and boundary dividing Special Flood Hazard Areas of different Base Flood Elevations, flood depths or flood velocities.

513	Base Flood Elevation line and value; elevation in feet*
(EL 987)	Base Flood Elevation value where uniform within zone; elevation in feet*

* Referenced to the North American Vertical Datum of 1988

(A)———(A)	Cross section line
(23)- - - -(23)	Transect line
87°07'45", 32°22'30"	Geographic coordinates referenced to the North American Datum of 1983 (NAD 83), Western Hemisphere
3976000mN	1000-meter Universal Transverse Mercator grid values, zone 11N
600000 FT	5000-foot grid ticks: California State Plane coordinate system, zone V (FIPSZONE 0405), Lambert Conformal Conic projection
DX5510 ×	Bench mark (see explanation in Notes to Users section of this FIRM panel)
●M1.5	River Mile

MAP REPOSITORY
Refer to listing of Map Repositories on Map Index

EFFECTIVE DATE OF COUNTYWIDE
FLOOD INSURANCE RATE MAP
March 18, 1996

EFFECTIVE DATE(S) OF REVISION(S) TO THIS PANEL
August 28, 2008 - to update corporate limits, to change Base Flood Elevations and Special Flood Hazard Areas, to update map format, to add roads and road names, and to incorporate previously issued Letters of Map Revision.

For community map revision history prior to countywide mapping, refer to the Community Map History table located in the Flood Insurance Study report for this jurisdiction.

To determine if flood insurance is available in this community, contact your Insurance agent or call the National Flood Insurance Program at 1-800-638-6620.

MAP SCALE 1" = 1000'

500 0 1000 2000 FEET

300 0 300 600 METERS

NFIP

NATIONAL FLOOD INSURANCE PROGRAM

PANEL 5840H

FIRM
FLOOD INSURANCE RATE MAP

SAN BERNARDINO COUNTY, CALIFORNIA
AND INCORPORATED AREAS
PANEL 5840 OF 9400

(SEE MAP INDEX FOR FIRM PANEL LAYOUT)

CONTAINS:

COMMUNITY	NUMBER	PANEL	SUFFIX
APPLE VALLEY, TOWN OF	060752	5840	H

Notice to User: The **Map Number** shown below should be used when placing map orders; the **Community Number** shown above should be used on insurance applications for the subject community.

MAP NUMBER
06071C5840H

MAP REVISED
AUGUST 28, 2008

Federal Emergency Management Agency

NOTES TO USERS

This map is for use in administering the National Flood Insurance Program. It does not necessarily identify all areas subject to flooding, particularly from local drainage sources of small size. The **community map repository** should be consulted for possible updated or additional flood hazard information.

To obtain more detailed information in areas where **Base Flood Elevations** (BFEs) and/or **floodways** have been determined, users are encouraged to consult the Flood Profiles and Floodway Data and/or Summary of Stillwater Elevations tables contained within the Flood Insurance Study (FIS) report that accompanies this FIRM. Users should be aware that BFEs shown on the FIRM represent rounded whole-foot elevations. These BFEs are intended for flood insurance rating purposes only and should not be used as the sole source of flood elevation information. Accordingly, flood elevation data presented in the FIS report should be utilized in conjunction with the FIRM for purposes of construction and/or floodplain management.

Coastal Base Flood Elevations shown on this map apply only landward of 0.0' North American Vertical Datum of 1988 (NAVD 88). Users of this FIRM should be aware that coastal flood elevations are also provided in the Summary of Stillwater Elevations tables in the Flood Insurance Study report for this jurisdiction. Elevations shown in the Summary of Stillwater Elevations tables should be used for construction and/or floodplain management purposes when they are higher than the elevations shown on this FIRM.

Boundaries of the **floodways** were computed at cross sections and interpolated between cross sections. The floodways were based on hydraulic considerations with regard to requirements of the National Flood Insurance Program. Floodway widths and other pertinent floodway data are provided in the Flood Insurance Study report for this jurisdiction.

Certain areas not in Special Flood Hazard Areas may be protected by **flood control structures**. Refer to Section 2.4 "Flood Protection Measures" of the Flood Insurance Study report for information on flood control structures for this jurisdiction.

The **projection** used in the preparation of this map was Universal Transverse Mercator (UTM) zone 11 North. The **horizontal datum** was NAD 83, GRS80 spheroid. Differences in datum, spheroid, projection or UTM zones used in the production of FIRMs for adjacent jurisdictions may result in slight positional differences in map features across jurisdiction boundaries. These differences do not affect the accuracy of this FIRM.

Flood elevations on this map are referenced to the North American Vertical Datum of 1988. These flood elevations must be compared to structure and ground elevations referenced to the same **vertical datum**. For information regarding conversion between the National Geodetic Vertical Datum of 1929 and the North American Vertical Datum of 1988, visit the National Geodetic Survey website at http://www.ngs.noaa.gov or contact the National Geodetic Survey at the following address:

NGS Information Services
NOAA, N/NGS12
National Geodetic Survey
SSMC-3, #9202
1315 East-West Highway
Silver Spring, Maryland 20910-3282
(301) 713-3242

To obtain current elevation, description, and/or location information for **bench marks** shown on this map, please contact the Information Services Branch of the National Geodetic Survey at **(301) 713-3242**, or visit its website at http://www.ngs.noaa.gov.

Base map information shown on this FIRM was derived from digital orthophotography collected by the U.S. Department of Agriculture Farm Service Agency. This imagery was flown in 2005 and was produced with a 1-meter ground sample distance.

This map may reflect more detailed and up-to-date stream channel configurations than those shown on the previous FIRM for this jurisdiction. The floodplains and floodways that were transferred from the previous FIRM may have been adjusted to confirm to these new stream channel configurations. As a result, the Flood Profiles and Floodway Data tables in the Flood Insurance Study Report (which contains authoritative hydraulic data) may reflect stream channel distances that differ from what is shown on this map.

Corporate limits shown on this map are based on the best data available at the time of publication. Because changes due to annexations or de-annexations may have occurred after this map was published, map users should contact appropriate community officials to verify current corporate limit locations.

Please refer to the separately printed **Map Index** for an overview map of the county showing the layout of map panels; community map repository addresses; and a Listing of Communities table containing National Flood Insurance Program dates for each community as well as a listing of the panels on which each community is located.

Contact the **FEMA Map Service Center** at 1-800-358-9616 for information on available products associated with this FIRM. Available products may include previously issued Letters of Map Change, a Flood Insurance Study report, and/or digital versions of this map. The FEMA Map Service Center may also be reached by Fax at 1-800-358-9620 and its website at http://msc.fema.gov/.

If you have **questions about this map** or questions concerning the National Flood Insurance Program in general, please call **1-877-FEMA MAP** (1-877-336-2627) or visit the FEMA website at http://www.fema.gov.

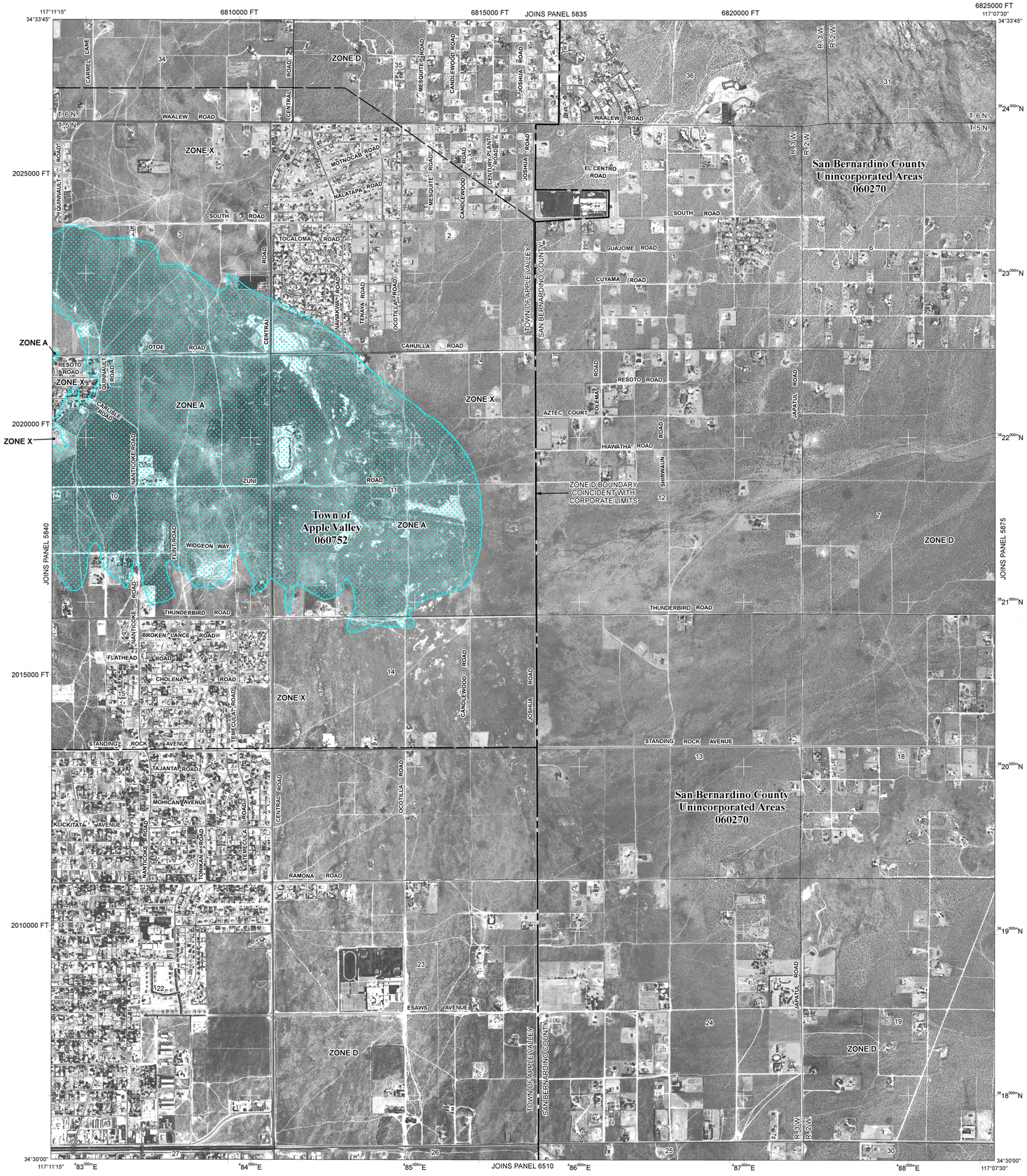

FIGURE 4.5-16

LEGEND

SPECIAL FLOOD HAZARD AREAS SUBJECT TO INUNDATION BY THE 1% ANNUAL CHANCE FLOOD

The 1% annual flood (100-year flood), also known as the base flood, is the flood that has a 1% chance of being equaled or exceeded in any given year. The Special Flood Hazard Area is the area subject to flooding by the 1% annual chance flood. Areas of Special Flood Hazard include Zones A, AE, AH, AO, AR, A99, V, and VE. The Base Flood Elevation is the water-surface elevation of the 1% annual chance flood.

ZONE A	No Base Flood Elevations determined.
ZONE AE	Base Flood Elevations determined.
ZONE AH	Flood depths of 1 to 3 feet (usually areas of ponding); Base Flood Elevations determined.
ZONE AO	Flood depths of 1 to 3 feet (usually sheet flow on sloping terrain); average depths determined. For areas of alluvial fan flooding, velocities also determined.
ZONE AR	Special Flood Hazard Area formerly protected from the 1% annual chance flood by a flood control system that was subsequently decertified. Zone AR indicates that the former flood control system is being restored to provide protection from the 1% annual chance or greater flood.
ZONE A99	Area to be protected from 1% annual chance flood by a Federal flood protection system under construction; no Base Flood Elevations determined.
ZONE V	Coastal flood zone with velocity hazard (wave action); no Base Flood Elevations determined.
ZONE VE	Coastal flood zone with velocity hazard (wave action); Base Flood Elevations determined.

FLOODWAY AREAS IN ZONE AE

The floodway is the channel of a stream plus any adjacent floodplain areas that must be kept free of encroachment so that the 1% annual chance flood can be carried without substantial increases in flood heights.

OTHER FLOOD AREAS

ZONE X — Areas of 0.2% annual chance flood; areas of 1% annual chance flood with average depths of less than 1 foot or with drainage areas less than 1 square mile; and areas protected by levees from 1% annual chance flood.

OTHER AREAS

ZONE X — Areas determined to be outside the 0.2% annual chance floodplain.

ZONE D — Areas in which flood hazards are undetermined, but possible.

COASTAL BARRIER RESOURCES SYSTEM (CBRS) AREAS

OTHERWISE PROTECTED AREAS (OPAs)

CBRS areas and OPAs are normally located within or adjacent to Special Flood Hazard Areas.

1% annual chance floodplain boundary

0.2% annual chance floodplain boundary

Floodway boundary

Zone D boundary

CBRS and OPA boundary

Boundary dividing Special Flood Hazard Area Zones and boundary dividing Special Flood Hazard Areas of different Base Flood Elevations, flood depths or flood velocities.

513	Base Flood Elevation line and value; elevation in feet*
(EL 987)	Base Flood Elevation value where uniform within zone; elevation in feet*

* Referenced to the North American Vertical Datum of 1988

(A)———(A)	Cross section line
(23)- - - - - -(23)	Transect line
87°07'45", 32°22'30"	Geographic coordinates referenced to the North American Datum of 1983 (NAD 83), Western Hemisphere
3976000mN	1000-meter Universal Transverse Mercator grid values, zone 11N
600000 FT	5000-foot grid ticks: California State Plane coordinate system, zone V (FIPSZONE 0405), Lambert Conformal Conic projection
DX5510 ×	Bench mark (see explanation in Notes to Users section of this FIRM panel)
●M1.5	River Mile

MAP REPOSITORY
Refer to listing of Map Repositories on Map Index

EFFECTIVE DATE OF COUNTYWIDE
FLOOD INSURANCE RATE MAP
March 18, 1996

EFFECTIVE DATE(S) OF REVISION(S) TO THIS PANEL
August 28, 2008 - to update corporate limits, to change Base Flood Elevations and Special Flood Hazard Areas, to update map format, to add roads and road names, and to incorporate previously issued Letters of Map Revision.

For community map revision history prior to countywide mapping, refer to the Community Map History table located in the Flood Insurance Study report for this jurisdiction.

To determine if flood insurance is available in this community, contact your Insurance agent or call the National Flood Insurance Program at 1-800-638-6620.

MAP SCALE 1" = 1000'

500 0 1000 2000 FEET

300 0 300 600 METERS

NFIP

NATIONAL FLOOD INSURANCE PROGRAM

PANEL 5845H

FIRM
FLOOD INSURANCE RATE MAP

SAN BERNARDINO COUNTY, CALIFORNIA
AND INCORPORATED AREAS
PANEL 5845 OF 9400

(SEE MAP INDEX FOR FIRM PANEL LAYOUT)

CONTAINS:

COMMUNITY	NUMBER	PANEL	SUFFIX
APPLE VALLEY, TOWN OF	060752	5845	H
SAN BERNARDINO COUNTY	060270	5845	H

Notice to User: The **Map Number** shown below should be used when placing map orders; the **Community Number** shown above should be used on insurance applications for the subject community.

MAP NUMBER
06071C5845H

MAP REVISED
AUGUST 28, 2008

Federal Emergency Management Agency

NOTES TO USERS

This map is for use in administering the National Flood Insurance Program. It does not necessarily identify all areas subject to flooding, particularly from local drainage sources of small size. The **community map repository** should be consulted for possible updated or additional flood hazard information.

To obtain more detailed information in areas where **Base Flood Elevations** (BFEs) and/or **floodways** have been determined, users are encouraged to consult the Flood Profiles and Floodway Data and/or Summary of Stillwater Elevations tables contained within the Flood Insurance Study (FIS) report that accompanies this FIRM. Users should be aware that BFEs shown on the FIRM represent rounded whole-foot elevations. These BFEs are intended for flood insurance rating purposes only and should not be used as the sole source of flood elevation information. Accordingly, flood elevation data presented in the FIS report should be utilized in conjunction with the FIRM for purposes of construction and/or floodplain management.

Coastal Base Flood Elevations shown on this map apply only landward of 0.0' North American Vertical Datum of 1988 (NAVD 88). Users of this FIRM should be aware that coastal flood elevations are also provided in the Summary of Stillwater Elevations tables in the Flood Insurance Study report for this jurisdiction. Elevations shown in the Summary of Stillwater Elevations tables should be used for construction and/or floodplain management purposes when they are higher than the elevations shown on this FIRM.

Boundaries of the **floodways** were computed at cross sections and interpolated between cross sections. The floodways were based on hydraulic considerations with regard to requirements of the National Flood Insurance Program. Floodway widths and other pertinent floodway data are provided in the Flood Insurance Study report for this jurisdiction.

Certain areas not in Special Flood Hazard Areas may be protected by **flood control structures**. Refer to Section 2.4 "Flood Protection Measures" of the Flood Insurance Study report for information on flood control structures for this jurisdiction.

The **projection** used in the preparation of this map was Universal Transverse Mercator (UTM) zone 11 North. The **horizontal datum** was NAD 83, GRS80 spheroid. Differences in datum, spheroid, projection or UTM zones used in the production of FIRMs for adjacent jurisdictions may result in slight positional differences in map features across jurisdiction boundaries. These differences do not affect the accuracy of this FIRM.

Flood elevations on this map are referenced to the North American Vertical Datum of 1988. These flood elevations must be compared to structure and ground elevations referenced to the same **vertical datum**. For information regarding conversion between the National Geodetic Vertical Datum of 1929 and the North American Vertical Datum of 1988, visit the National Geodetic Survey website at http://www.ngs.noaa.gov or contact the National Geodetic Survey at the following address:

NGS Information Services
NOAA, N/NGS12
National Geodetic Survey
SSMC-3, #9202
1315 East-West Highway
Silver Spring, Maryland 20910-3282
(301) 713-3242

To obtain current elevation, description, and/or location information for **bench marks** shown on this map, please contact the Information Services Branch of the National Geodetic Survey at **(301) 713-3242**, or visit its website at http://www.ngs.noaa.gov.

Base map information shown on this FIRM was derived from digital orthophotography collected by the U.S. Department of Agriculture Farm Service Agency. This imagery was flown in 2005 and was produced with a 1-meter ground sample distance.

This map may reflect more detailed and up-to-date stream channel configurations than those shown on the previous FIRM for this jurisdiction. The floodplains and floodways that were transferred from the previous FIRM may have been adjusted to confirm to these new stream channel configurations. As a result, the Flood Profiles and Floodway Data tables in the Flood Insurance Study Report (which contains authoritative hydraulic data) may reflect stream channel distances that differ from what is shown on this map.

Corporate limits shown on this map are based on the best data available at the time of publication. Because changes due to annexations or de-annexations may have occurred after this map was published, map users should contact appropriate community officials to verify current corporate limit locations.

Please refer to the separately printed **Map Index** for an overview map of the county showing the layout of map panels; community map repository addresses; and a Listing of Communities table containing National Flood Insurance Program dates for each community as well as a listing of the panels on which each community is located.

Contact the **FEMA Map Service Center** at 1-800-358-9616 for information on available products associated with this FIRM. Available products may include previously issued Letters of Map Change, a Flood Insurance Study report, and/or digital versions of this map. The FEMA Map Service Center may also be reached by Fax at 1-800-358-9620 and its website at http://msc.fema.gov/.

If you have **questions about this map** or questions concerning the National Flood Insurance Program in general, please call **1-877-FEMA MAP** (1-877-336-2627) or visit the FEMA website at http://www.fema.gov.

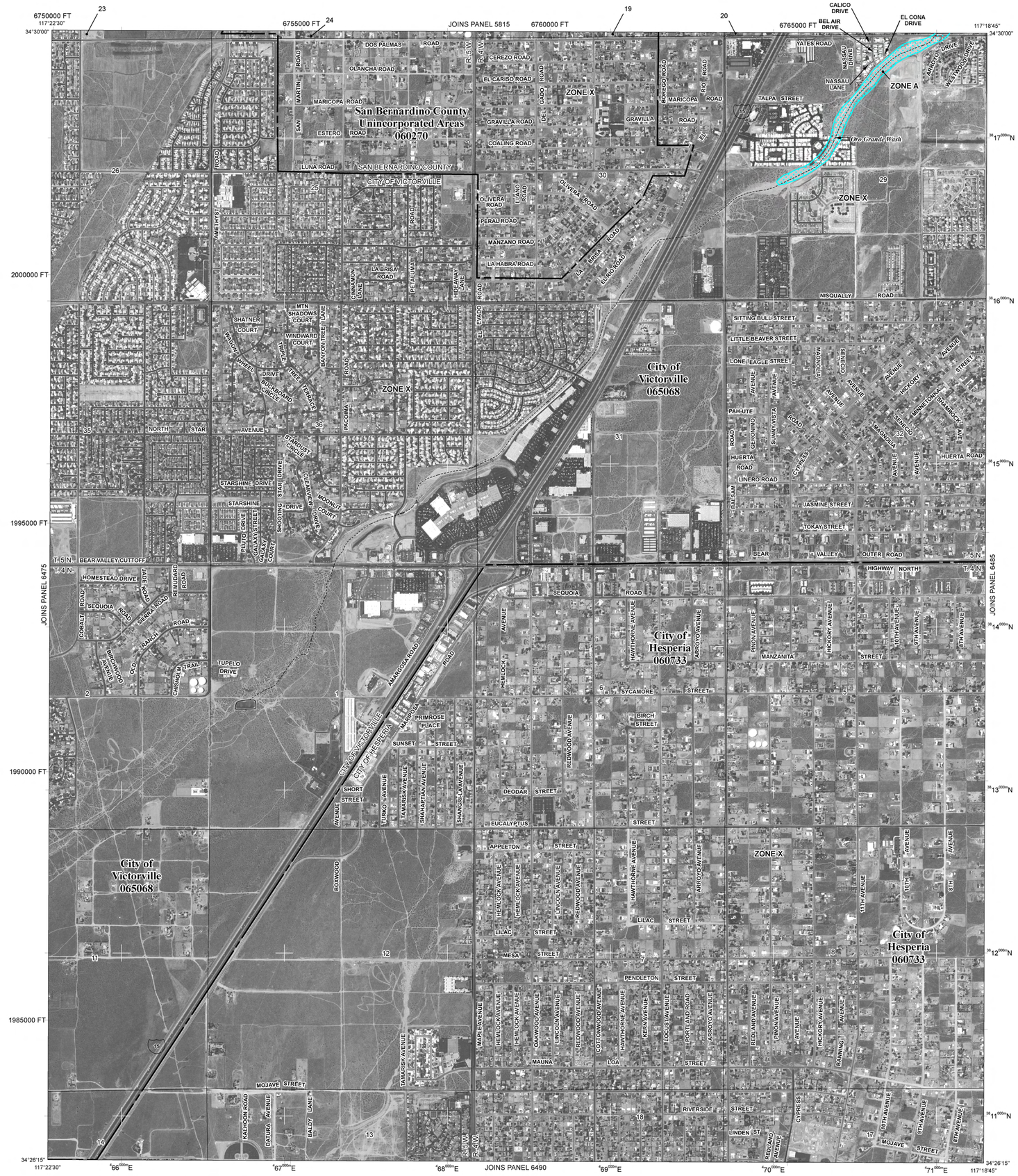

FIGURE 4.5-17

LEGEND

SPECIAL FLOOD HAZARD AREAS SUBJECT TO INUNDATION BY THE 1% ANNUAL CHANCE FLOOD

The 1% annual flood (100-year flood), also known as the base flood, is the flood that has a 1% chance of being equaled or exceeded in any given year. The Special Flood Hazard Area is the area subject to flooding by the 1% annual chance flood. Areas of Special Flood Hazard include Zones A, AE, AH, AO, AR, A99, V, and VE. The Base Flood Elevation is the water-surface elevation of the 1% annual chance flood.

ZONE A	No Base Flood Elevations determined.
ZONE AE	Base Flood Elevations determined.
ZONE AH	Flood depths of 1 to 3 feet (usually areas of ponding); Base Flood Elevations determined.
ZONE AO	Flood depths of 1 to 3 feet (usually sheet flow on sloping terrain); average depths determined. For areas of alluvial fan flooding, velocities also determined.
ZONE AR	Special Flood Hazard Area formerly protected from the 1% annual chance flood by a flood control system that was subsequently decertified. Zone AR indicates that the former flood control system is being restored to provide protection from the 1% annual chance or greater flood.
ZONE A99	Area to be protected from 1% annual chance flood by a Federal flood protection system under construction; no Base Flood Elevations determined.
ZONE V	Coastal flood zone with velocity hazard (wave action); no Base Flood Elevations determined.
ZONE VE	Coastal flood zone with velocity hazard (wave action); Base Flood Elevations determined.

FLOODWAY AREAS IN ZONE AE

The floodway is the channel of a stream plus any adjacent floodplain areas that must be kept free of encroachment so that the 1% annual chance flood can be carried without substantial increases in flood heights.

OTHER FLOOD AREAS

ZONE X — Areas of 0.2% annual chance flood; areas of 1% annual chance flood with average depths of less than 1 foot or with drainage areas less than 1 square mile; and areas protected by levees from 1% annual chance flood.

OTHER AREAS

ZONE X — Areas determined to be outside the 0.2% annual chance floodplain.

ZONE D — Areas in which flood hazards are undetermined, but possible.

COASTAL BARRIER RESOURCES SYSTEM (CBRS) AREAS

OTHERWISE PROTECTED AREAS (OPAs)

CBRS areas and OPAs are normally located within or adjacent to Special Flood Hazard Areas.

1% annual chance floodplain boundary

0.2% annual chance floodplain boundary

Floodway boundary

Zone D boundary

CBRS and OPA boundary

Boundary dividing Special Flood Hazard Area Zones and boundary dividing Special Flood Hazard Areas of different Base Flood Elevations, flood depths or flood velocities.

513	Base Flood Elevation line and value; elevation in feet*
(EL 987)	Base Flood Elevation value where uniform within zone; elevation in feet*

* Referenced to the North American Vertical Datum of 1988

(A)———(A)	Cross section line
(23)- - - - -(23)	Transect line
87°07'45", 32°22'30"	Geographic coordinates referenced to the North American Datum of 1983 (NAD 83), Western Hemisphere
2976000mN	1000-meter Universal Transverse Mercator grid values, zone 11N
600000 FT	5000-foot grid ticks: California State Plane coordinate system, zone V (FIPSZONE 0405), Lambert Conformal Conic projection
DX5510 ×	Bench mark (see explanation in Notes to Users section of this FIRM panel)
●M1.5	River Mile

MAP REPOSITORY
Refer to listing of Map Repositories on Map Index

EFFECTIVE DATE OF COUNTYWIDE
FLOOD INSURANCE RATE MAP
March 18, 1996

EFFECTIVE DATE(S) OF REVISION(S) TO THIS PANEL
August 28, 2008 - to update corporate limits, to change Base Flood Elevations and Special Flood Hazard Areas, to update map format, to add roads and road names, and to incorporate previously issued Letters of Map Revision.

For community map revision history prior to countywide mapping, refer to the Community Map History table located in the Flood Insurance Study report for this jurisdiction.

To determine if flood insurance is available in this community, contact your Insurance agent or call the National Flood Insurance Program at 1-800-638-6620.

MAP SCALE 1" = 1000'

500 0 1000 2000 FEET

300 0 300 600 METERS

NFIP

NATIONAL FLOOD INSURANCE PROGRAM

PANEL 6480H

FIRM
FLOOD INSURANCE RATE MAP

SAN BERNARDINO COUNTY, CALIFORNIA
AND INCORPORATED AREAS
PANEL 6480 OF 9400

(SEE MAP INDEX FOR FIRM PANEL LAYOUT)

CONTAINS:

COMMUNITY	NUMBER	PANEL	SUFFIX
HESPERIA, CITY OF	060733	6480	H
SAN BERNARDINO COUNTY	060270	6480	H
VICTORVILLE, CITY OF	065068	6480	H

Notice to User: The **Map Number** shown below should be used when placing map orders; the **Community Number** shown above should be used on insurance applications for the subject community.

MAP NUMBER
06071C6480H

MAP REVISED
AUGUST 28, 2008

Federal Emergency Management Agency

NOTES TO USERS

This map is for use in administering the National Flood Insurance Program. It does not necessarily identify all areas subject to flooding, particularly from local drainage sources of small size. The **community map repository** should be consulted for possible updated or additional flood hazard information.

To obtain more detailed information in areas where **Base Flood Elevations** (BFEs) and/or **floodways** have been determined, users are encouraged to consult the Flood Profiles and Floodway Data and/or Summary of Stillwater Elevations tables contained within the Flood Insurance Study (FIS) report that accompanies this FIRM. Users should be aware that BFEs shown on the FIRM represent rounded whole-foot elevations. These BFEs are intended for flood insurance rating purposes only and should not be used as the sole source of flood elevation information. Accordingly, flood elevation data presented in the FIS report should be utilized in conjunction with the FIRM for purposes of construction and/or floodplain management.

Coastal Base Flood Elevations shown on this map apply only landward of 0.0' North American Vertical Datum of 1988 (NAVD 88). Users of this FIRM should be aware that coastal flood elevations are also provided in the Summary of Stillwater Elevations tables in the Flood Insurance Study report for this jurisdiction. Elevations shown in the Summary of Stillwater Elevations tables should be used for construction and/or floodplain management purposes when they are higher than the elevations shown on this FIRM.

Boundaries of the **floodways** were computed at cross sections and interpolated between cross sections. The floodways were based on hydraulic considerations with regard to requirements of the National Flood Insurance Program. Floodway widths and other pertinent floodway data are provided in the Flood Insurance Study report for this jurisdiction.

Certain areas not in Special Flood Hazard Areas may be protected by **flood control structures**. Refer to Section 2.4 "Flood Protection Measures" of the Flood Insurance Study report for information on flood control structures for this jurisdiction.

The **projection** used in the preparation of this map was Universal Transverse Mercator (UTM) zone 11 North. The **horizontal datum** was NAD 83, GRS80 spheroid. Differences in datum, spheroid, projection or UTM zones used in the production of FIRMs for adjacent jurisdictions may result in slight positional differences in map features across jurisdiction boundaries. These differences do not affect the accuracy of this FIRM.

Flood elevations on this map are referenced to the North American Vertical Datum of 1988. These flood elevations must be compared to structure and ground elevations referenced to the same **vertical datum**. For information regarding conversion between the National Geodetic Vertical Datum of 1929 and the North American Vertical Datum of 1988, visit the National Geodetic Survey website at http://www.ngs.noaa.gov or contact the National Geodetic Survey at the following address:

NGS Information Services
NOAA, N/NGS12
National Geodetic Survey
SSMC-3, #9202
1315 East-West Highway
Silver Spring, Maryland 20910-3282
(301) 713-3242

To obtain current elevation, description, and/or location information for **bench marks** shown on this map, please contact the Information Services Branch of the National Geodetic Survey at **(301) 713-3242**, or visit its website at http://www.ngs.noaa.gov.

Base map information shown on this FIRM was derived from digital orthophotography collected by the U.S. Department of Agriculture Farm Service Agency. This imagery was flown in 2005 and was produced with a 1-meter ground sample distance.

This map may reflect more detailed and up-to-date stream channel configurations than those shown on the previous FIRM for this jurisdiction. The floodplains and floodways that were transferred from the previous FIRM may have been adjusted to confirm to these new stream channel configurations. As a result, the Flood Profiles and Floodway Data tables in the Flood Insurance Study Report (which contains authoritative hydraulic data) may reflect stream channel distances that differ from what is shown on this map.

Corporate limits shown on this map are based on the best data available at the time of publication. Because changes due to annexations or de-annexations may have occurred after this map was published, map users should contact appropriate community officials to verify current corporate limit locations.

Please refer to the separately printed **Map Index** for an overview map of the county showing the layout of map panels; community map repository addresses; and a Listing of Communities table containing National Flood Insurance Program dates for each community as well as a listing of the panels on which each community is located.

Contact the **FEMA Map Service Center** at 1-800-358-9616 for information on available products associated with this FIRM. Available products may include previously issued Letters of Map Change, a Flood Insurance Study report, and/or digital versions of this map. The FEMA Map Service Center may also be reached by Fax at 1-800-358-9620 and its website at http://msc.fema.gov/.

If you have **questions about this map** or questions concerning the National Flood Insurance Program in general, please call **1-877-FEMA MAP** (1-877-336-2627) or visit the FEMA website at http://www.fema.gov.

WARNING: This map contains levees, dikes, or other structures that have been provisionally accredited and mapped as providing protection from the 1-percent--annual-chance flood. To maintain accreditation, the levee owner or community is required to submit documentation necessary to comply with 44 CFR Section 65.10 by August 8, 2009. Because of the risk of overtopping or failure of the structure, communities should take proper precautions to protect lives and minimize damages in these areas, such as issuing an evacuation plan and encouraging property owners to purchase flood insurance.

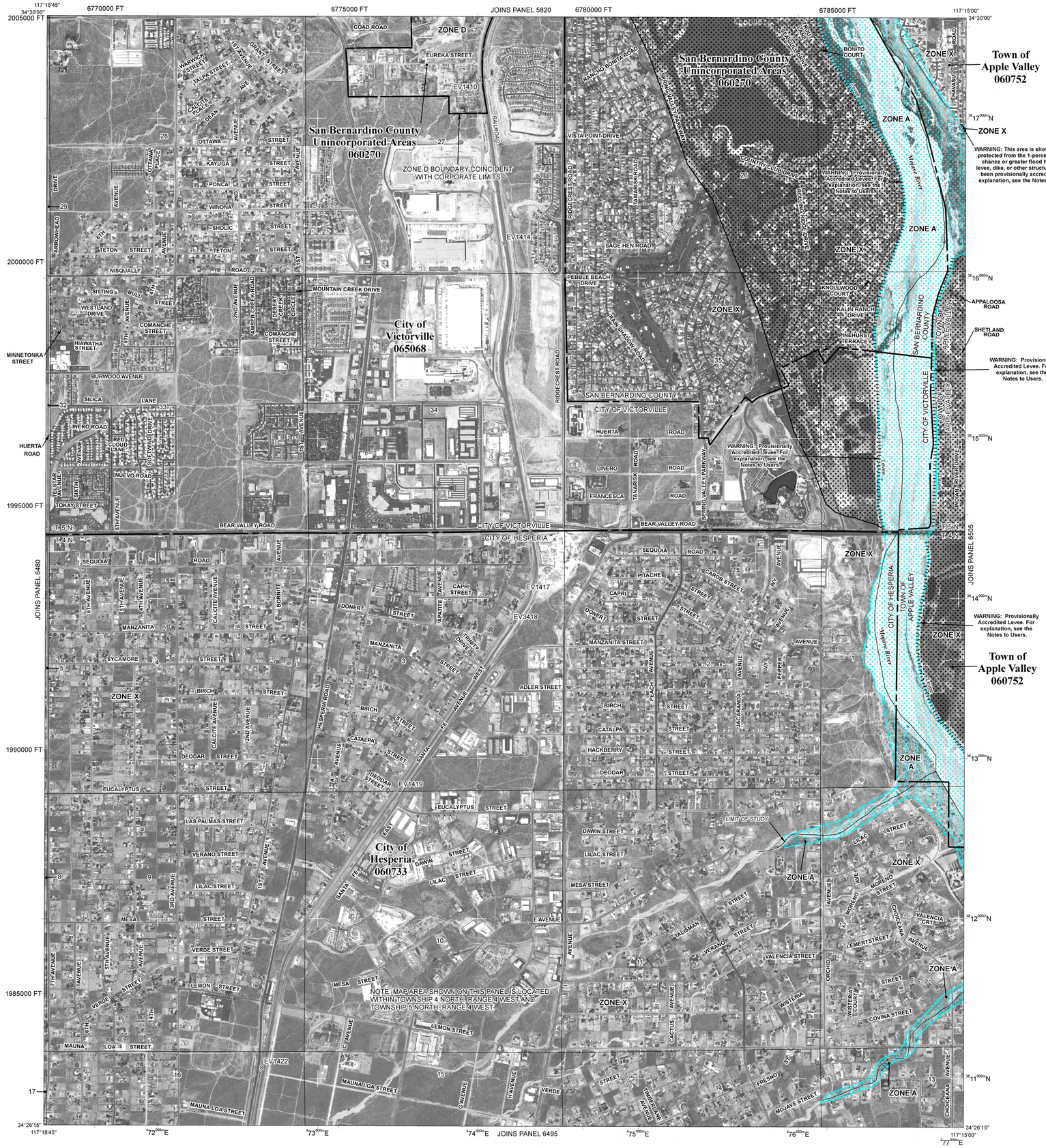

FIGURE 4.5-18

LEGEND

SPECIAL FLOOD HAZARD AREAS SUBJECT TO INUNDATION BY THE 1% ANNUAL CHANCE FLOOD

The 1% annual flood (100-year flood), also known as the base flood, is the flood that has a 1% chance of being equaled or exceeded in any given year. The Special Flood Hazard Area is the area subject to flooding by the 1% annual chance flood. Areas of Special Flood Hazard include Zones A, AE, AH, AO, AR, A99, V, and VE. The Base Flood Elevation is the water-surface elevation of the 1% annual chance flood.

ZONE A	No Base Flood Elevations determined.
ZONE AE	Base Flood Elevations determined.
ZONE AH	Flood depths of 1 to 3 feet (usually areas of ponding); Base Flood Elevations determined.
ZONE AO	Flood depths of 1 to 3 feet (usually sheet flow on sloping terrain); average depths determined. For areas of alluvial fan flooding, velocities also determined.
ZONE AR	Special Flood Hazard Area formerly protected from the 1% annual chance flood by a flood control system that was subsequently decertified. Zone AR indicates that the former flood control system is being restored to provide protection from the 1% annual chance or greater flood.
ZONE A99	Area to be protected from 1% annual chance flood by a Federal flood protection system under construction; no Base Flood Elevations determined.
ZONE V	Coastal flood zone with velocity hazard (wave action); no Base Flood Elevations determined.
ZONE VE	Coastal flood zone with velocity hazard (wave action); Base Flood Elevations determined.

FLOODWAY AREAS IN ZONE AE

The floodway is the channel of a stream plus any adjacent floodplain areas that must be kept free of encroachment so that the 1% annual chance flood can be carried without substantial increases in flood heights.

OTHER FLOOD AREAS

ZONE X	Areas of 0.2% annual chance flood; areas of 1% annual chance flood with average depths of less than 1 foot or with drainage areas less than 1 square mile; and areas protected by levees from 1% annual chance flood.

OTHER AREAS

ZONE X	Areas determined to be outside the 0.2% annual chance floodplain.
ZONE D	Areas in which flood hazards are undetermined, but possible.

COASTAL BARRIER RESOURCES SYSTEM (CBRS) AREAS

OTHERWISE PROTECTED AREAS (OPAs)

CBRS areas and OPAs are normally located within or adjacent to Special Flood Hazard Areas.

1% annual chance floodplain boundary

0.2% annual chance floodplain boundary

Floodway boundary

Zone D boundary

CBRS and OPA boundary

Boundary dividing Special Flood Hazard Area Zones and boundary dividing Special Flood Hazard Areas of different Base Flood Elevations, flood depths or flood velocities.

513	Base Flood Elevation line and value; elevation in feet*
(EL 987)	Base Flood Elevation value where uniform within zone; elevation in feet*

* Referenced to the North American Vertical Datum of 1988

(A)———(A)	Cross section line
(23)- - - - -(23)	Transect line
87°07'45", 32°22'30"	Geographic coordinates referenced to the North American Datum of 1983 (NAD 83), Western Hemisphere
4 76000mN	1000-meter Universal Transverse Mercator grid values, zone 11N
600000 FT	5000-foot grid ticks: California State Plane coordinate system, zone V (FIPSZONE 0405), Lambert Conformal Conic projection
DX5510 ×	Bench mark (see explanation in Notes to Users section of this FIRM panel)
●M1.5	River Mile

MAP REPOSITORY
Refer to listing of Map Repositories on Map Index

EFFECTIVE DATE OF COUNTYWIDE
FLOOD INSURANCE RATE MAP
March 18, 1996

EFFECTIVE DATE(S) OF REVISION(S) TO THIS PANEL
August 28, 2008 - to update corporate limits, to change Base Flood Elevations and Special Flood Hazard Areas, to update map format, to add roads and road names, and to incorporate previously issued Letters of Map Revision.

For community map revision history prior to countywide mapping, refer to the Community Map History table located in the Flood Insurance Study report for this jurisdiction.

To determine if flood insurance is available in this community, contact your Insurance agent or call the National Flood Insurance Program at 1-800-638-6620.

MAP SCALE 1" = 1000'

500 0 1000 2000 FEET

300 0 300 600 METERS

NFIP

NATIONAL FLOOD INSURANCE PROGRAM

PANEL 6485H

FIRM
FLOOD INSURANCE RATE MAP

SAN BERNARDINO COUNTY, CALIFORNIA
AND INCORPORATED AREAS
PANEL 6485 OF 9400

(SEE MAP INDEX FOR FIRM PANEL LAYOUT)

CONTAINS:

COMMUNITY	NUMBER	PANEL	SUFFIX
APPLE VALLEY, TOWN OF	060752	6485	H
HESPERIA, CITY OF	060733	6485	H
SAN BERNARDINO COUNTY	060270	6485	H
VICTORVILLE, CITY OF	065068	6485	H

Notice to User: The **Map Number** shown below should be used when placing map orders; the **Community Number** shown above should be used on insurance applications for the subject community.

MAP NUMBER
06071C6485H

MAP REVISED
AUGUST 28, 2008

Federal Emergency Management Agency

4.6 NOISE

4.6.1 Introduction

The purpose of the Town of Apple Valley and City of Hesperia Subregional Wastewater Reclamation Plants (WRPs) and related facilities is for future implementation of a wastewater treatment system project to produce recycled water that can be used for landscape irrigation to offset potable water use. The two WRPs are to be located within the Town of Apple Valley and the City of Hesperia. The proposed project has been designed to provide wastewater treatment capabilities in order to meet existing and future demand for recycled water and to continue to comply with regulatory requirements and public health and safety needs.

The proposed Town of Apple Valley and City of Hesperia Subregional WRPs and related facilities would be located within areas developed with a mix of residential, commercial, recreational and vacant land uses. The Apple Valley Airport is located just north of the proposed project area within the Town of Apple Valley. Specifically, the proposed Apple Valley WRP and existing lift station would be located within the Lenny Brewster Sports Center, a public park just north of Otoe Road. The proposed pipeline alignments lie within existing road rights-of-way. The two alternative locations for the Apple Valley percolation basins would either be on a vacant parcel within an area developed with single family residences, east of Waalew Road, or on vacant lands just south of the Apple Valley Airport.

The first alternative for the Hesperia WRP site (Alternative A) would be located on a disturbed, vacant site west of Catawba Road and Acacia Road. The second alternative for the Hesperia WRP site (Alternative B) would be located on a disturbed, vacant site northwest of Mojave Street and Tamarisk Avenue. The proposed pipeline alignments would be located within existing road rights-of-way. The proposed lift station site would be located on a graded lot, just south of Mojave Street and west of Maple Avenue. The Hesperia percolation basins would be located on a vacant site at the northwest corner of the intersection of Manzanita Street and I Avenue.

This section of the DEIR focuses on the assessment of potential noise impacts on the environment resulting from the implementation of the project. Implementation of the proposed project could result in increased noise levels over both the short and long term. Short-term noise increases will be caused by construction activities and the long-term noise increases could be associated with facilities and operational activities in support of the Town of Apple Valley and City of Hesperia Subregional WRPs and related facilities. Most of the information provided in the following text is abstracted from a noise technical report titled “Noise Impact Analysis VVWRA Reclamation Facilities Town of Apple Valley and City of Hesperia, California,” prepared by Giroux & Associates (September 2010). A copy of the full study is provided as an appendix in Volume 2 of this DEIR, Technical Appendices.

4.6.2 Noise Characteristics

Noise is mechanical energy transmitted by pressure waves in a compressible medium such as air. Noise is generally defined as unwanted sound. Sound is characterized by various parameters which describe the rate of oscillation of sound waves, the distance between successive troughs or crests in the wave form, the speed of propagation, and the pressure level or energy content of a given sound wave. In particular, the sound pressure level has become

the most common descriptor used to characterize the loudness of an ambient sound level. The unit of sound pressure ratioed to the faintest sound detectable by a keen human ear is called a decibel (dB).

Because sound or noise can vary in intensity by over one million times within the range of human hearing, a logarithmic loudness scale similar to the Richter scale used for earthquake magnitude is used to keep sound intensity values at a convenient and understandable level. Various acoustical scale and units of measurement have been developed such as: equivalent sound levels (Leq), day-night average sound levels (Ldn) and community noise equivalent level (CNEL).

A-weighted decibels (dBA) approximate the subjective response of the human ear to a broad frequency noise source by discriminating against the very low and high frequencies of the audible spectrum. They are adjusted to reflect only those frequencies that are audible to the human ear.

Examples of the decibel level of various noise sources (instantaneous single noise event) include the quiet rustle of leaves (10 dBA), a library (35 dBA), ambient noise outdoors (50 dBA), normal conversation at 5 feet (55 dBA) or a busy street at 50 feet (75 dBA).

Equivalent sound levels are not measured directly but rather calculated from sound pressure levels typically measured in dBA. The Leq is the constant level that, over a given time period, transmits the same amount of acoustic energy as the actual time-varying sound. Equivalent sound levels are the basis for both the Ldn and CNEL scales. It can be envisioned as all of the sound energy over a discrete period of time averaged over that period.

Ldn value is a measure of the cumulative noise exposure of the community at a given location. The Ldn value results from a summation of hourly Leq's over a 24-hour time period with an increased weighting factor applied to the nighttime period between 10:00 p.m. and 7:00 a.m. This noise rating scheme takes into account those subjectively more annoying noise events which occur during the normal sleeping hours.

CNEL is also a measure of the cumulative noise exposure of the community at a given location and it also incorporates a weighting penalty for noises that occur during the nighttime hours. In addition, CNEL levels include a penalty for noise events that occur during the evening hours between 7:00 p.m. and 10:00 p.m. Because of the weighting factors applied, CNEL values at a given location will always be slightly larger than Ldn values, which in turn will exceed Leq values. However, CNEL values are typically within one decibel of the day-night average sound level.

Since the human ear is not equally sensitive to all sound frequencies within the entire spectrum, noise levels at maximum human sensitivity are factored more heavily into sound descriptions.

Additionally, because community noise receptors are more sensitive to noise during night and evening hours, State law requires that, for planning purposes, an artificial dB increment be added to quiet time noise levels in a 24-hour noise descriptor called the Community Noise Equivalent Level (CNEL).

4.6.3 Sensitive Receptors

Sensitive noise receptors are generally considered to be residences, schools, health care facilities, hotels/motels, churches, libraries, or passive parks. Residential uses are particularly sensitive to nocturnal (night-time) noise intrusion that might be associated with construction, operational, or vehicle traffic. Schools similarly could be affected by daytime noise sources.

4.6.4 Noise Standards

The Noise Ordinances of the Town of Apple Valley Development Code and the City of Hesperia Municipal Code establish noise quality standards for land use categories based on the State of California Office of Noise Control and land use compatibility (please refer to Table 4.6-1). An interior CNEL level of 45 dB(A) is mandated by the State of California Noise Insulation Standards (CCR, Title 24, Part 6, Section T25-28) for residential dwellings and is considered a desirable noise exposure for the interior of all residential units.

Normal noise attenuation within residential structures with closed windows is about 20dB, therefore an exterior noise level of 65 dB(A) CNEL will meet the interior standard without any specialized measures. A noise level of 65 dB(A) CNEL is usually also the level at which noise begins to interfere with the ability to carry on a normal conversation at a reasonable distance without raising one's voice. 45 to 60 dB is considered the exterior noise-land use compatibility guideline for residences in Town of Apple Valley and the City of Hesperia. However, the State Department of Housing and Community Development has established standards for new multi-family housing. New multi-family units cannot be exposed to outdoor ambient noise levels in excess of 65dB CNEL and interior ambient noise levels of 45 dB CNEL (with all doors and windows closed).

The standard for less sensitive land uses, such as commercial uses, is generally less stringent, i.e., higher. Noise levels up to 65 dB are considered "conditionally acceptable" for offices and business commercial land uses.

While the Noise Standard guidelines apply to mobile transportation noise sources, stationary equipment noise crossing the boundary of adjoining land uses is generally regulated by local ordinance because no state or federal preemption exists for such sources.

The Town of Apple Valley's Noise Ordinance provides for the noise standards indicated in Table 4.6-2 below. The Town's noise ordinance limits are stated in terms of a 30-minute limit with allowable deviations from this 50th percentile standard. Specifically, the Noise Ordinance in the Development Code states that the daytime noise level for a noise source measured at an outdoor area of a residential property cannot exceed 70 dB ever, 65 dB for more than one minute of any hour, 60 dB for more than 5 minutes of any hour, 55 dB for more than 15 minutes of any hour, or 50 dB for more than 30 minutes of any hour. Nighttime noise levels limits are reduced by 5 dB to reflect the increased sensitivity to noise occurring during that time period.

Table 4.6-1
Land Use Compatibility for Community Noise Environments

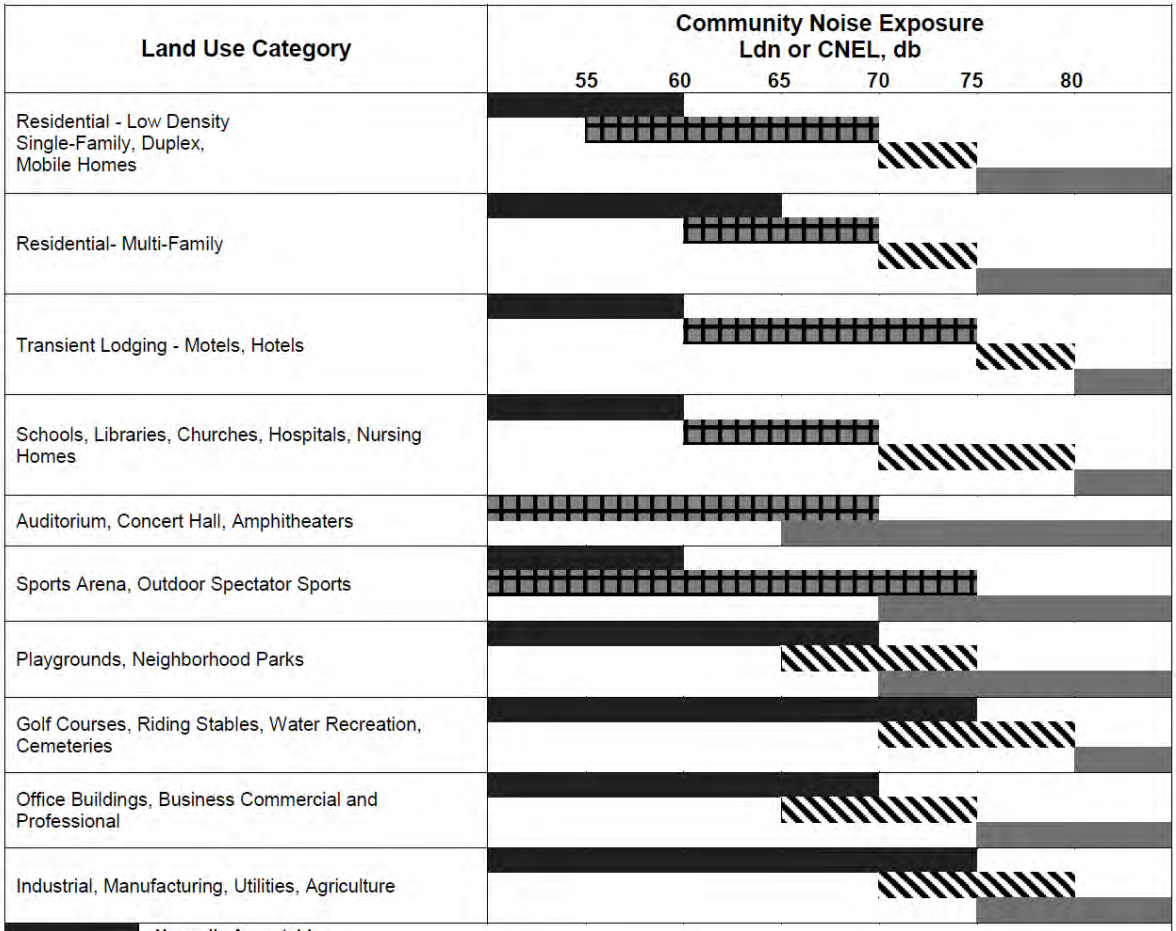

Normally Acceptable
Specified land use is satisfactory, based upon the assumption that any buildings involved are of normal conventional construction, without any special noise insulation requirements.

Conditionally Acceptable
New construction or development should be undertaken only after a detailed analysis of the noise reduction requirements is made and needed noise insulation features included in the design.

Normally Unacceptable
New construction of development should be discouraged. If new construction or development does proceed, a detailed analysis of the noise reduction requirement must be made and needed noise insulation features included in the design.

Clearly Unacceptable
New construction of development clearly should not be undertaken.

A major objective of the noise element is to utilize this information to ensure compatible land use planning: The noise contours shall be used as a guide for establishing a pattern of land uses in the land use element that minimizes the exposure of community residents to excessive noise. (Government Code Section 65302(f))

Source: State of California General Plan Guidelines, Office of Planning and Research June 1990

Table 4.6-2
TOWN OF APPLE VALLEY NOISE COMPATIBILITY STANDARDS
EXTERIOR NOISE STANDARDS
(Levels not to be exceeded for 30 minutes in any hour)

Noise Zone	Noise Level	Time Period
Residential Properties	50 dB	7:00 a.m. – 10:00 p.m.
	45 dB	10:00 p.m. – 7:00 a.m.
Multiple Family Dwellings	50 dB	7:00 a.m. – 10:00 p.m.
	45 dB	10:00 p.m. – 7:00 a.m.
Limited Commercial& Office	60 dB	7:00 a.m. – 10:00 p.m.
	55 dB	10:00 p.m. – 7:00 a.m.
General Commercial	65 dB	7:00 a.m. – 10:00 p.m.
	60 dB	10:00 p.m. – 7:00 a.m.

The following additional not to exceed limitations apply:

1. The noise standard for a cumulative period of more than 30 minutes in any hour; or
2. The noise standard plus 5 dB(A) for a cumulative period of more than 15 minutes in any hour;
3. The noise standard plus 10 dB(A) for a cumulative period of more than 5 minutes in any hour;
4. The noise standard plus 15 dB(A) for a cumulative period of more than one minute in any hour;
5. The noise standard plus 20 dB(A) for any period of time.

If the measured ambient level differs from that permissible within any of the noise limit categories above, the allowable noise exposure standard shall be adjusted in five (5) dB increments in each category as appropriate to reflect said ambient noise level.

In the event the alleged offensive noise, as judged by the Noise Control officer, contains a steady, audible tone such as a whine, screech, or hum, or is a repetitive noise such as hammering or riveting, or contains music or speech conveying informational content, the standard limits set forth shall be reduced by five (5) dBA.

The City of Hesperia Municipal Code provides for the noise standards indicated in Table 4.6-3 below. The City's Noise Ordinance exempts noise generated by construction from the Noise Ordinance standards if construction is restricted to the hours of 7 a.m. and 7 p.m. on weekdays and Saturdays.

Table 4.6-3
CITY OF HESPERIA NOISE COMPATIBILITY STANDARDS
NOISE STANDARDS

Affected Receiving Land Use	Maximum Noise Level	Time Period
A-1, A-2, R-1, R-3 and RR Zone Districts	55 dB(A)	10:00 p.m. - 7:00 a.m.
A-1, A-2, R-1, R-3 and RR Zone Districts	60 dB(A)	7:00 a.m. - 10:00 p.m.
C-1, C-2, C-3, C-4, C-R, AP, and P-I Zone Districts	65 dB(A)	Anytime
I-1 and I-2 Zone Districts	70 dB(A)	Anytime

The following additional not to exceed limitations apply:

1. The noise standard for a cumulative period of more than 30 minutes in any hour; or
2. The noise standard plus 5 dB(A) for a cumulative period of more than 15 minutes in any hour;
3. The noise standard plus 10 dB(A) for a cumulative period of more than 5 minutes in any hour;
4. The noise standard plus 15 dB(A) for a cumulative period of more than one minute in any hour;
5. The noise standard plus 20 dB(A) for any period of time.

If the measured ambient level exceeds any of the noise limit categories above, the allowable exposure standard shall be increased to reflect the ambient noise level.

If the alleged offense consists entirely of impact noise or simple tonal noise, each of the noise levels in shall be reduced by five dB(A). (Ord. 2002-07 Exh. A, 2002; Amended during 1997 codification; Ord. 75 § 2 (part), 1990; SBCC § 87.1305)

Construction noise is typically governed by ordinance limits on allowable times of equipment operations. CEQA Appendix G guidelines state that if an impact is regulated by a rule or regulation specifically designed to control a given type of impact (such as construction noise), then compliance with that rule may be used in substantiation of a finding that the impact is less-than-significant. Construction noise impacts therefore will be less-than-significant if they comply with the applicable ordinance limits.

The Apple Valley Development Code restricts and regulates both the hours of construction operation as well as the levels of construction noise. Construction noise is restricted from 7:00 p.m. to 7:00 a.m. weekdays and at any time on Sundays or holidays when it creates a noise disturbance across a residential or commercial property line.

The maximum noise levels for non-scheduled, intermittent, and short-term operation (less than 10 days) of mobile construction equipment at residential structures are summarized in Table 4.6-4 below.

Table 4.6-4
MAXIMUM NOISE LEVELS FOR MOBILE EQUIPMENT AT RESIDENTIAL STRUCTURES

	Single-family Residential (dBA)	Multi-family Residential (dBA)	Semi-residential/ Commercial (dBA)
Daily, except Sundays and legal holidays, 7:00 a.m. to 7:00 p.m.	75	80	85
Daily, 7:00 p.m. to 7:00 a.m. and all day Sunday and legal holidays.	60	65	70

The maximum noise levels for stationary construction equipment for repetitively scheduled and relatively long-term operation (period of 10 days or more) of stationary equipment at residential structures is summarized in Table 4.6-5 below.

Table 4.6-5
MAXIMUM NOISE LEVELS FOR STATIONARY EQUIPMENT AT RESIDENTIAL STRUCTURES

	Single-family Residential (dBA)	Multi-family Residential (dBA)	Semi-residential/ Commercial (dBA)
Daily, except Sundays and legal holidays, 7:00 a.m. to 7:00 p.m.	60	65	70
Daily, 7:00 p.m. to 7:00 a.m. and all day Sunday and legal holidays.	50	55	60

The maximum noise levels for non-scheduled, intermittent, short-term operation of mobile equipment at business structures is 85 dBA at all hours on a daily basis, including Sunday and legal holidays.

4.6.5 Environmental Setting

The project areas are located within the City of Hesperia and the Town of Apple Valley in the County of San Bernardino. Existing land uses within the project area include a mix of residential, commercial, recreational and vacant land uses. As described above, the proposed Town of Apple Valley and City of Hesperia Subregional WRPs and related facilities would be located within areas developed with a mix of residential, commercial, recreational and vacant land uses. The Apple Valley Airport is located just north of the proposed project area within the Town of Apple Valley. Specifically, the proposed Apple Valley WRP and existing lift station would be located within the Lenny Brewster Sports Center, a public park just north of Otoe Road. The proposed pipeline alignments lie within existing road rights-of-way. The two alternative locations for the Apple Valley percolation basins would either be on a vacant parcel within an area developed with single family residences, east of Waalew Road, or on vacant lands just south of the Apple Valley Airport.

Alternative A for the Hesperia WRP site would be located on a disturbed, vacant site west of Catawba Road and Acacia Road. Alternative B for the Hesperia WRP site would be located on a disturbed, vacant site northwest of Mojave Street and Tamarisk Avenue. The proposed pipeline alignments would be located within existing road rights-of-way. The proposed lift station site would be located on a paved lot, just south of Mojave Street and west of Tamarisk Avenue. The Hesperia percolation basins would be located on a vacant site at the northwest corner of the intersection of Manzanita Street and I Avenue.

A Noise Impact Analysis was conducted by Giroux & Associates on May 5th, 6th, and 7th at two locations on the proposed WRP location northwest of Mojave Street and Tamarisk Avenue within the City of Hesperia and two locations at the proposed Apple Valley WRP site. Meter 1 (M1) was taken at a point just north of the intersection of Tamarisk Avenue and Mojave Street. Meter 2 (M2) was taken at a point on the northwest portion of the site. Meter 3 (M3) was taken at a point along the northernmost portion of the Lenny Brewster Sports Center. Meter 4 (M4) was taken at a point along the western boundary within the southern portion of the Lenny Brewster Sports Center. The noise measurements are listed in Table 4.6-6.

Table 4.6-6
EXISTING HOURLY LEQ AND CNEL (dB)

Time Interval	Hesperia		Apple Valley	
	Meter 1 Measured	Meter 2 Measured	Meter 3 Measured	Meter 4 Measured
17:00-18:00	57.5	56.7*	49.0	44.3
18:00-19:00	56.0	46.6	45.6	46.0
19:00-20:00	51.8	43.4	52.1	52.0
20:00-21:00	53.4	43.3	49.7	43.2
21:00-22:00	49.4	43.2	38.9	42.1
22:00-23:00	45.5	42.0	38.7	43.1
23:00-24:00	45.8	42.3	60.9*	42.2
0:00-1:00	42.8	42.7	44.5	45.1
1:00-2:00	43.0	42.7	44.4	45.7
2:00-3:00	45.8	40.4	42.2	45.4
3:00-4:00	44.7	39.7	40.0	45.2
4:00-5:00	49.0	40.8	37.7	44.2
5:00:6:00	55.5	43.2	38.1	45.1
6:00-7:00	55.2	45.1	37.0	46.3
7:00-8:00	53.3	45.3	52.9	48.1
8:00-9:00	53.3	39.5	56.1	49.2
9:00-10:00	48.1	37.0	57.8	49.5
10:00-11:00	51.4	45.9	50.9	42.0
11:00-12:00	53.1	41.6	57.2	47.8
12:00-13:00	47.8	36.5	49.9	46.8
13:00-14:00	51.0	39.7	48.8	47.6
14:00-15:00	54.3	37.3	40.3	41.5
15:00-16:00	52.3	41.2	54.5	41.7
16:00-17:00	53.0	57.5	38.2	38.5
CNEL	58.4	52.1	57.5	50.9

Note: * probable localized contamination, maybe sprinklers

According to the noise impact analysis, the existing noise levels often exceed the stringent nighttime noise standard of 40 dB for Apple Valley. The more lenient noise nocturnal standard of 55 dB for Hesperia is never exceeded. Meter 1 along Tamarisk Avenue shows a sharp rise in traffic noise from 5-6 a.m. as many Hesperia commuters get an early start. Meter 2 also experiences a noticeable rise in noise levels at 5-6 a.m., but levels remain well below the most stringent City of Hesperia L50 standard. Because of the stringency of the Town of Apple Valley stationary source standard, baseline levels even in relatively quiet locations exceed those standards.

4.6.6 Environmental Impacts

The proposed project's potential to generate noise was included in this DEIR based on the potential for specific projects to cause short-term and long-term changes in the noise environment within and surrounding the proposed project locations. Short-term noise increases could result from construction activities and the long-term noise increases could be associated with the operation of the future site-specific projects.

4.6.6.1 Thresholds of Significance

According to the current CEQA Appendix G guidelines, noise impacts are considered potentially significant if they cause:

a. Exposure of persons to or generation of noise levels in excess of standards established in the local general plan or noise ordinance, or applicable standards of other agencies. Noise levels exceeding the City of Hesperia or Town of Apple Valley Noise Standards would be considered significant.

b. Exposure of persons to or generation of excessive groundborne vibration or groundborne noise levels.

c. A substantial permanent increase in ambient noise levels in the project vicinity above levels existing without the project.

d. A substantial temporary or periodic increase in ambient noise levels in the project vicinity above levels existing without the project.

Two characteristic noise sources are typically identified with a project such as the proposed WRPs and support facilities. Construction activities, especially heavy equipment, will create short-term noise increases near each project site. Upon completion, project-related operational noise may impact the closest sensitive receptors.

Construction noise is governed by ordinance limits on allowable times of equipment operations. Both Hesperia and Apple Valley limit the hours of construction operation to be between the hours of 7:00 a.m. and 7:00 p.m. on weekdays and Saturdays. Apple Valley also requires construction to meet specified noise performance standards where technically and economically feasible.

4.6.6.2 Project Impacts

Would the project result in the exposure of persons to or generation of noise levels in excess of standards established in the local general plan or noise ordinance, or applicable standards of other agencies?

Construction Noise

Implementation of the project will generate noise. Grading and construction equipment can generate noise levels ranging between 70 and 90 dBA at a distance of 50 feet from the equipment. Earth-moving equipment could include excavators, backhoes, tractors, dump trucks, scrapers, and front loaders. The most intensive earth-moving would occur during excavation of the rapid infiltration (recharge) basins. Noise levels at 50 feet from earth-moving equipment range from about 73 to 96 dB. Engine-powered materials-handling equipment expected to be used includes cranes, concrete mixers, and concrete pumps. Theoretical noise levels from materials-handling equipment at 50 feet range from about 76 to 88 dB. If several pieces of such equipment are operating in very close proximity, their noise impacts are additive. For three major pieces of highly mobile equipment in simultaneous and co-located operation, their theoretical combined noise level is 85 dB. Monitored construction noise near construction projects have generally produced hourly average noise levels in the high 70 dB Leq range at a 50-foot reference distance. Heavy equipment operations within 125 feet of an occupied home may interfere with normal enjoyment of the outdoor area of a home.

The Town of Apple Valley construction noise performance standard is generally met within 100 feet of the equipment for the types of construction activities that would occur for the proposed projects. The closest residences to the center of the proposed Apple Valley WRP are more than 500 feet away. Park recreation facilities are similarly far removed. With such set-back, construction noise performance standards of the Apple Valley Municipal Code will not be exceeded.

The two percolation pond alternative locations are within rural areas with minimal development. Each location has one rural residence near the southern boundary. Construction of the berm along the south side of the ponds is recommended to screen the closest home from subsequent excavation noise.

Alternative A for the Hesperia WRP is located in an undeveloped area with no homes in close proximity that could be affected by construction noise. The Alternative B site has existing or planned homes within 300 feet of anticipated construction activities where equipment noise would be clearly audible, but not a significant intrusion.

The Hesperia lift station location has an existing home south of the site that may be impacted by construction noise. Because of the proximity of this home, a stricter limit on construction hours is recommended than those allowed under the municipal code. A restriction of 7 a.m. to 4:30 p.m. Monday through Friday except in an emergency is recommended for this project component.

The percolation basin site has a few homes to the east, but excavation equipment will be highly mobile.

Pond excavation will involve building a berm along the eastern boundary. Construction of that berm as the first construction element is recommended to shield the homes from subsequent pond excavation phases.

Stationary equipment which could be used during construction activities may include generators, pumps, and air compressors. Typical noise levels at 50 feet range from 69 to 86 dB. Dewatering pumps are the only pieces of equipment possibly needed for a 24-hour operation. The estimated noise level at 50 feet from the pump is 60 dB.

WRP locations have adequate set-back to achieve acceptable noise exposures at the closest receiver if nocturnal dewatering were necessary. The Hesperia Lift Station is the one location where dewatering, if needed, could be intrusive. Any such dewatering would require a noise-proof pump enclosure as to not create sleep disturbance at the closest home.

The increased noise levels discussed above will not be severe enough to pose a health or hearing hazard, but could be considered a short-term nuisance. The construction of the proposed project may exceed the City of Hesperia and Town of Apple Valley noise standards at the exterior location of some residences, depending on the background noise levels at the construction and receptor locations. This increase in noise levels will be intermittent while different phases of the project are being constructed. The increase in noise levels from these activities will occur during the less noise sensitive daylight hours when background sound levels are already high due primarily to traffic.

Operational Noise

Because of the need for odor containment during primary treatment, the loudest grinders, pumps and blowers are located indoors, often in basements or submerged in wet-wells. In addition, to protect plant workers from hearing damage loud indoor noise sources are often shrouded or individually enclosed and sound absorption panels are installed on walls and ceilings. Noise levels outside enclosed treatment processes are typically 45-50 dB in close proximity to the building.

Exposed pumps without any attenuation barrier can create noise levels of 66 dB at 10 feet from the pump. With geometric spreading losses, the Apple Valley nocturnal noise standard of 45 dB would be met at 112 feet from the pump. The less stringent nocturnal Hesperia noise ordinance standard of 55 dB would be met at 35 feet. Adequate set-back is anticipated at both WRP locations as to not exceed significance thresholds for any exposed pump.

The operation of an emergency generator can create noise levels of 60 dB at 58 feet from the unit. The City of Hesperia daytime noise standard is 60 dB. The Town of Apple Valley daytime noise standard of 50 dB is met at 180 feet from the unit. Placement of the emergency generator relative to the closest neighbors can therefore be used to reduce possible audibility during weekly testing or during power outages.

Lift station pumps will be electrical pumps in an underground pump room. Measurements at similar facilities show noise levels of less than 50 dB at 50 feet. Noise ordinance standards will not be exceeded. The enclosed generator will operate for periodic testing and during power outages. Measurements have typically shown 65 dB at 50 feet on the louver and exhaust pipe side of the unit. The Hesperia noise ordinance standard could be exceeded at the nearest residence if they faced the louver or exhaust sides of the generator room. In order to achieve a less-than-significant noise level from the back-up generator, the louver and exhaust pipe sides of the enclosure must be located on the north (Mojave Street) frontage of the generator room.

WRP operational noise would have a less-than-significant noise impact based upon project noise control design features and sufficient buffer distances. Any site-specific operational noise impact could possibly only result at the Hesperia Lift Station.

The proposed mitigation measures in Section 4.12.5 are considered adequate to reduce noise impacts to a less than significant impact level because design or structural measures to attenuate noise can and will be implemented to meet the City's external and internal noise standards.

Would the project result in exposure of persons to or generation of excessive groundborne vibration or groundborne noise levels?

Demolition and construction activities would increase groundborne vibration periodically. However, the periods of increase would be of short duration and only occur during daylight hours. The on-site construction equipment that will briefly create the maximum potential vibration is a large bulldozer. The stated vibration source level in the FTA Handbook for such equipment is 87 VdB at 25 feet from the source. By 200 feet the vibration level dissipates to 69 VdB, or below the annoyance threshold.

The nearest residential structures to the WRP project sites, are 300 or more feet away. Vibration levels from heavy equipment would thus be well below the human perception threshold at the nearest off-site homes. Vibration levels will not exceed either the potential nuisance threshold or the building damage threshold.

Mitigation for the noise impacts from construction equipment is included in Section 4.6.7 and are adequate to reduce the impacts of groundborne vibration to less than significant.

Would the project result in a substantial permanent increase in ambient noise levels in the project vicinity above levels existing without the project?

The proposed Town of Apple Valley and City of Hesperia Wastewater Reclamation Plants and Related Facilities Project will generate long-term noise impacts and increases in ambient noise levels would occur as part of the project. The noise forecast data contained in the Town of Apple Valley and City of Hesperia General Plans indicate that noise levels in the entire project area will increase over time due to development and vehicle traffic. This is due to the forecast build-out environment within the Town of Apple Valley, City of Hesperia, and adjacent communities. Although the implementation of the Town of Apple Valley and City of Hesperia Wastewater Reclamation Plants and Related Facilities Project will result in both short and long-term noise level increases, the project does not constitute a significant contribution to these increases in noise levels (Please refer to the discussion above). The impacts to ambient noise levels from the proposed project are considered less than significant.

Would the project result in a substantial temporary or periodic increase in ambient noise levels in the project vicinity above levels existing without the project?

As outlined in item (1) this project is forecast to have a temporary impact on ambient noise levels during construction. Incorporation of the mitigation measures set forth in Section 4.6.7 are considered adequate to reduce the temporary and periodic noise impacts to ambient noise levels to a less than significant level.

For a project located within an airport land use plan, or where such a plan has not been adopted, within two miles of a public airport of public use airport, would the project expose people residing or working in the project area to excessive noise levels?

One of the proposed alternative percolation basin sites is located south of the Apple Valley Airport. According to the Town of Apple Valley Airport Comprehensive Land Use Compatibility Plan, the proposed percolation basin site is not within the airport influence area. Further, according to Figure 5-2 in the Noise element, the proposed project site is located outside of the 2010 60 dBA CNEL noise contour of the Apple Valley Airport. Therefore, no adverse impact from proximity to the Airport is forecast to occur for project implementation.

No excessive noise levels are associated with the proposed percolation basin except some short-term and periodic construction noise (please refer to the analysis presented above). These impacts would be reduced to a less than significant level with incorporation of mitigation measures listed in Section 4.6.7.

For a project within the vicinity of a private airstrip, would the project expose people residing or working in the project area to excessive noise levels?

The project site is not within the noise zone of any private airport. Thus, no adverse impact can possibly occur.

4.6.7 Mitigation Measures

The mitigation measures listed below shall be implemented, where feasible. Those measures that are mandatory are identified and those measures that are optional are also identified.

4.6-1 ***Construction shall be limited to the hours of 7 a.m. to 7 p.m. on Monday through Friday, and between 9 a.m. to 6 p.m. on Saturday, and shall be prohibited on Sundays and federal holidays, or as defined in local noise ordinances. Exceptions are for water pumping from wet areas or declared emergency circumstances. (Mandatory)***

4.6-2 ***All construction vehicles and fixed or mobile equipment shall be equipped with properly operating and maintained mufflers. (Mandatory)***

4.6-3 ***All employees that will be exposed to noise levels greater than 75 dB over an 8-hour period shall be provided with adequate hearing protection devices to ensure no hearing damage will result from construction activities. (Mandatory)***

4.6-4 ***If equipment is being used that can cause hearing damage at adjacent noise receptor locations (distance attenuation shall be taken into account), portable noise barriers shall be installed that are demonstrated to be adequate to reduce noise levels at receptor locations below hearing damage thresholds. (Optional)***

4.6-5 ***All production lift stations or booster pumps shall have their noise levels attenuated to 50 dBA CNEL at the adjacent property boundary, when noise sensitive uses occur on such property, or in accordance with a local noise ordinance. This measure is a modification to 4.11-5 from the OBMP PEIR. (Mandatory)***

4.6-6 ***Schedule the construction such that the minimum number of pieces of equipment will be operating at the same time. (Optional)***

4.6-7 Utilize construction methods or equipment that will provide the lowest level of noise impact, i.e., use newer equipment that will generate lower noise levels. (Optional)

4.6-8 Maintain good relations with the local community where construction is scheduled, such as keeping people informed of the schedule, duration, and progress of the construction, to minimize the public objections of unavoidable noise. Communities should be notified in advance of the construction and the expected temporary and intermittent noise increases during the construction period. (Optional)

With implementation of the above mandatory and optional mitigation measures, all potential adverse impacts to the existing noise environment can be controlled or reduced to a less than significant impact level.

4.6.8 Cumulative Impacts

The noise forecast data contained in the Town of Apple Valley and City of Hesperia General Plans indicate that cumulative noise levels in the project area will increase over time. This is due to the forecast build-out environment within the Town of Apple Valley, City of Hesperia, and adjacent communities. The implementation of the Town of Apple Valley and City of Hesperia Wastewater Reclamation Plants and Related Facilities Project does not constitute a significant contribution to these cumulative increases in the noise environment. Therefore the cumulative noise impacts from the proposed project are considered less than significant.

4.6.9 Unavoidable Adverse Impacts

The noise evaluation presented above indicates that the proposed project does not have the potential to cause potentially significant and unavoidable adverse noise impacts from implementing the Town of Apple Valley and City of Hesperia Wastewater Reclamation Plants and Related Facilities Project. As described above, mitigation measures have been identified that can reduce both short-term and permanent noise impacts below a significant level. Noise conditions will be unavoidably altered by implementation of the proposed project, in both the short- and long-term, but this change in noise condition is not forecast to result in significant adverse impacts with implementation of mitigation measures listed above. Thus, sound levels, noise, will experience a small unavoidable adverse increase in noise, but this increase will not reach a level of significant unavoidable adverse noise impact.

4.7 POPULATION AND HOUSING

4.7.1 Introduction

The purpose of this section is to describe potential environmental impacts associated with population and housing issues that may be associated with the implementation of the proposed project. The following population and housing issues have been identified as having a potential to experience significant impacts:

- Displacement of existing housing or people
- Growth inducement

To evaluate potential impacts to population and housing, information compiled by the following agencies has been utilized: Town of Apple Valley; City of Hesperia; the County of San Bernardino; the Mojave Water Agency; U.S. Census Bureau; and the Southern California Association of Governments.

4.7.2 Environmental Setting

VVWRA was formed by its constituent agencies in 1977 to help meet the requirements of the federal Clean Water Act and provide wastewater treatment for the Victor Valley, including the cities of Victorville and Hesperia (and Adelanto at that time), the Town of Apple Valley, and the surrounding unincorporated areas.

4.7.2.1 Existing Population Estimates

Town of Apple Valley
The Town of Apple Valley adopted its current General Plan in the year 2009. The Town of Apple Valley is within the VVWRA and MWA boundaries. The 2009 population estimates indicate that approximately 74,266 people resided within the Town. The General Plan estimates an ultimate build-out population of 185,858.

California Department of Finance population estimates for the Town of Apple Valley

2000	54,239
2001	55,475
2002	57,197
2003	59,083
2004	61,494
2005	63,761
2006	67,362
2007	70,160
2008	70,092

City of Hesperia
The City of Hesperia adopted its current General Plan in 2010. The City is within the VVWRA and MWA boundaries. The General Plan indicates that the current population of the City is

approximately 102,600 residents, and estimates an ultimate build-out population of more than 243,000.

California Department of Finance population estimates for the City of Hesperia

2000	62,590
2001	63,525
2002	65,531
2003	68,028
2004	70,447
2005	75,963
2006	79,981
2007	85,430
2008	87,220

4.7.2.2 General Population Forecasts

As previously stated, the Town of Apple Valley General Plan provides for an ultimate build-out population of 185,858. In addition, the City of Hesperia General Plan provides for an ultimate build-out population of more than 243,000. According to the County of San Bernardino General Plan, current SCAG projections indicate that the population of San Bernardino is projected to increase by approximately 60% to over 2,830,000 over the next 10 years.

According to the Mojave Water Agency's 2004 Regional Water Management Plan, the projected population from 2010 to 2030 within the Mojave Basin Area (includes all communities within the Mojave River Basin, including those outside of the Victor Valley) are as follows:

2010	368,300
2015	422,600
2020	492,900
2025	522,800
2030	588,000

The Water Management Plan projects that the MWA will grow at a rate of 2.0% per year over the next 10 years, for a total population growth of approximately 124,600 residents overall in the MWA service area, to a forecasted population of 492,900 persons. Of this forecast growth, the Alto Subbasin (which includes the Victor Valley) is estimated to have a 2010 population of 303,700 and a forecasted 2020 population of 407,700, or an estimated growth over ten years by about 104,000 persons. This growth is forecast to occur regardless of whether the proposed project is implemented.

Note that a slowdown in population growth within the Victor Valley, similar to that during the 1990's, has affected the Valley for the past three years, a reflection of the severe national recession, particularly affecting construction and housing resources. This is a reflection that factors other than water availability, control actual population growth within the region and the State.

4.7.3 Environmental Impacts

4.7.3.1 Significance Criteria

The project would be considered to have a significant adverse impact to population and housing if it would:

- Induce substantial population growth in an area, either directly or (for example, by proposing new homes and businesses) or indirectly (for example, through extension of roads or other infrastructure);
- Displace substantial numbers of existing housing, necessitating the construction of replacement housing elsewhere; or
- Displace substantial numbers of people, necessitating the construction of replacement of housing elsewhere.

4.7.3.2 Project Impacts

Would the project induce substantial population growth in an area, either directly (for example, by proposing new homes and businesses) or indirectly (for example, through extension of roads or other infrastructure)?

Implementation of the Town of Apple Valley and City of Hesperia Wastewater Reclamation Plants and Related Facilities Project will result in a series of minor, direct physical changes in the environment. The proposed project does not include any activities that would directly induce growth; it simply provides infrastructure improvements to provide wastewater treatment services for existing and future development in the project area as a result of implementing the Town of Apple Valley, City of Hesperia, and County of San Bernardino general plans within the VVWRA service area. As such, the proposed project is consistent with the population forecasts and has no potential to modify these forecasts in any manner. It is also consistent with the current Regional Water Management Plan (RWMP) which identifies the need for local sub-regional wastewater reclamation plants to provide recycled water to meet regional water supply requirements. (Refer to pages 9-24 through 9-25 of the RWMP) The preferred alternatives (D5r and D6r, see Chapter 9 of the RWMP) include the reclamation by VVWRA of discharge above 9,700 acre-feet/year as a common element to meet future water supply requirements, and as indicated in Table 9-9 of the RWMP, “wastewater reclamation” is assigned a “high” priority.

The purpose of the Town of Apple Valley and City of Hesperia Wastewater Reclamation Plants and Related Facilities Project is to provide adequate wastewater treatment capacity to comply with public health and safety regulations and to meet current and future Alto Subbasin water supply demands over the long-term, i.e., through 2030 and beyond. Forecast population growth for the MWA service area, including the Alto Subbasin, incorporates the proposed project as one component in a suite of water supply options. In addition to meeting local demand for recycled water, any residual recycled water will be percolated into the Alto Subbasin for future use as potable water, after proper detention in the ground before utilization.

The VVWRA is implementing the proposed project in order to directly serve its customers and to meet its legal obligation to do so. Thus, the proposed project is intended to supply recycled water in order to meet part of the long-term water supply requirements of the Town of Apple Valley, City of Hesperia, and County of San Bernardino general plans. Therefore, the growth patterns for the project area have already been developed by the local and regional agencies governing the land use decisions within the project area. Further, the proposed project does not modify any of the land use constraints established by these local and regional governing agencies.

Implementation of the proposed infrastructure improvement project is intended to accommodate the population forecasts and development patterns established by the Town of Apple Valley, City of Hesperia, and County of San Bernardino. Construction of the facilities will place demand on the local construction force, but because of the high levels of unemployment in the construction sector, this is not forecast to induce a substantial short-term increase in population within the Victor Valley. Therefore, the implementation of the proposed project is not projected to induce substantial population growth within the project area. Growth will continue to occur based on the local, regional and national economies and their role in allowing future development of job producing uses, and then concurrent population growth in conjunction with this area growth in jobs.

Would the project displace substantial numbers of existing housing or people, necessitating the construction of replacement housing elsewhere?

Implementation of the Town of Apple Valley and City of Hesperia Wastewater Reclamation Plants and Related Facilities Project will result in a series of minor, direct physical changes in the environment through the implementation of the following project components: installation of approximately 79,000 lineal feet of pipeline; installation of percolation ponds; installation of one new lift station within the City of Hesperia and the modification of the existing lift station within the Town of Apple Valley; and, installation of a wastewater reclamation plant within the Town of Apple Valley and within the City of Hesperia. The VVWRA is proposing these infrastructure improvements in order to provide sufficient wastewater treatment capacity to comply with public health and safety requirements, provide additional treatment capacity to alleviate flows in downstream interceptors, and to provide for the future expansion of services.

The proposed Town of Apple Valley and City of Hesperia Subregional WRPs and related facilities would be located within areas developed with a mix of residential, commercial, recreational and vacant land uses. The Apple Valley Airport is located just north of the proposed Project area within the Town of Apple Valley. Specifically, the proposed Apple Valley WRP and existing lift station would be located within the Lenny Brewster Sports Center, a public park just north of Otoe Road. The proposed pipeline alignments lie within existing road rights-of-way. The two alternative locations for the Apple Valley percolation basins would either be on a vacant parcel within an area developed with single family residences, east of Waalew Road, or on vacant lands just south of the Apple Valley Airport. The first alternative for the Hesperia WRP site would be located on a disturbed, vacant site west of Catawba Road and Acacia Road. The second alternative for the Hesperia WRP site would be located on a disturbed, vacant site northwest of Mojave Street and Tamarisk Avenue. The proposed pipeline alignments would be located within existing road rights-of-way. The proposed lift station site would be located on a paved lot, just south of Mojave Street and west of Tamarisk Avenue. The Hesperia percolation

basins would be located on a vacant site at the northwest corner of the intersection of Manzanita Street and I Avenue.

The proposed infrastructure would be located on either vacant site, a site developed with existing recreational facilities, or within existing road rights-of-way. The proposed facilities would not result in any activities that would modify existing or future housing. Further, the proposed facilities will not result in the displacement of a significant number of people. The proposed wastewater facilities are intended to meet current and future wastewater treatment demands. In addition, the proposed project would make potable water available for future anticipated demands. Because no existing or future housing would be removed or displaced as a result of the proposed project, no impact is forecast to occur.

4.7.4 Mitigation Measures

Since no adverse impact to the region's population or housing resources and since the project is not identified as being "growth inducing," no mitigation measures have been identified or are required.

4.7.5 Cumulative Impacts

The implementation of the project will not increase the population or displace available or planned housing within the Town of Apple Valley or City of Hesperia. The proposed project will be consistent with the study area population and housing projections and policies within the local and regional plans. Implementation of the proposed project is not forecast to cause any direct or indirect significant adverse population and housing impacts. Therefore, no significant cumulatively considerable contribution to population and housing impacts is forecast to occur if the proposed Town of Apple Valley and City of Hesperia Wastewater Reclamation Plants and Related Facilities Project are implemented.

4.7.6 Unavoidable Adverse Impacts

The Town of Apple Valley and City of Hesperia Wastewater Reclamation Plants and Related Facilities Project is designed to comply with public health and safety requirements, provide additional treatment capacity to alleviate flows in downstream interceptors, and to provide for the future contribution to regional water supply requirements. The proposed project is fully consistent with the project area's general plans, the MWA RWMP and population and housing forecasts. The provision of wastewater treatment and a new recycled water supply in order to meet current and future demand is growth accommodating, not growth inducing. Since development of the proposed facilities is driven by actual growth and demand within the VVWRA service area as determined by other regional, state and national growth factors, the project can be implemented without causing or contributing to future significant growth or changes in population within the VVWRA service area.

This page left intentionally blank for pagination purposes.

4.8 NATIONAL ENVIRONMENTAL POLICY ACT ENVIRONMENTAL ISSUES

There are a number of issues that are unique to environmental documents compiled to comply with the National Environmental Policy Act (NEPA). Based on communications with the U.S. Bureau of Reclamation (BOR) environmental staff, it would be premature to process a NEPA Environmental Assessment (EA) or Environmental Impact Statement (EIS) until a specific project has been submitted for review and approval by the BOR. However, it was agreed that the environmental information and analysis in this DEIR should be prepared to meet NEPA documentation standards. The previous subchapters have been prepared to meet these requirements, but there are a number of environmental issues that are unique to NEPA evaluations. The following issues are included to address these unique NEPA requirements. As indicated in Chapter 2, the alternatives evaluation for this DEIR has been compiled to meet CEQA requirements but includes several alternatives to the project other than a No Project Alternative. The identification and analysis of the unique NEPA environmental issue follows.

4.8.1 Coastal Zone Management Act and Coastal Barrier Resources

The proposed project location is within the Mojave Desert more than 50 miles from the Pacific Ocean. Due to this separation, implementation of the proposed project has no potential to conflict with either of these management issues.

4.8.2 Wild and Scenic Rivers

The Mojave River is not designated as a Wild and Scenic River; therefore, the proposed project, which does not directly impact the Mojave River, has no potential to adversely impact and wild and scenic river resource values.

4.8.3 Farmland Protection

None of the WRP facilities are located on land designated as important local, regional or State farmland. None of the project sites have any existing agricultural activities and no historic activities. Therefore, the proposed project has no potential to adversely impact any farmland with substantial agricultural or soil values.

4.8.4 Recreation and Section 4(f) Properties

The Hesperia WRP has no recreation activities or Section 4(f) properties within this proposed project's area of potential effect (APE). Therefore, implementation of the proposed Hesperia WRP has no potential to adversely affect or conflict with recreation activities or Section 4(f) property values.

In contrast, the proposed Apple Valley WRP will be located at Brewster Park, which already contains an existing wastewater management facility. It is possible that the proposed Apple Valley WRP will affect some additional recreation/Section 4(f) property and mitigation will be required. If federal funds are used in support of the Apple Valley WRP, it is anticipated that VVWRA and the Town of Apple Valley will have to compensate for the loss of some parking area at Brewster Park and the possible loss of some of the Park's recreational area. This will be accomplished by providing additional area for parking to make up for the loss of any parking

spaces at Brewster Park and by adding additional recreation area/facilities to ensure that the Park can continue to meet the expectations of the community residents that use Brewster Park. Note also that the proposed project will provide recycled water to support landscape irrigation requirements at the Park, which will allow the existing recreation values of this green space to meet the community's recreation needs.

4.8.5 Unique Natural Features and Areas

All of the proposed project facilities will be located within topographic and landscape features that are common within the Victor Valley. None of the proposed facility locations occupy sites with any unique natural features or areas and no such features have been designated within the Victor Valley. Consequently, the proposed project has no potential to adversely impact any unique or natural features or areas.

4.8.6 Invasive Species

Due to the extensive construction activities that will be conducted in support of the proposed project, a potential for introduction of invasive plant species exists at all facility locations where construction activities will be conducted. A mitigation measure (Measure 4.3-12) has been identified to control both the introduction of invasive plant species during construction activities and the passive invasion of invasive species following completion of construction. With implementation of this measure, the potential for adverse impacts due to invasive species can be controlled to a less than substantial level of impact.

4.8.7 Environmental Justice

The proposed project facility locations are not located within neighborhoods that suffer from exposure to adverse human health or environmental conditions. There are no major industrial activities or sites in the vicinity of the facility locations. The primary employers are generally related to school district, health care services and retail stores. The City of Hesperia and Town of Apple Valley are communities with normal annual average incomes, with a modest proportion of low income families, but none within the immediate vicinity of the proposed project facilities. The proposed project will temporarily impact those residents along the pipeline routes and permanently impact those in the vicinity of the WRPs. However, the proposed project has no potential to adversely impact any specific low income or ethnic communities over the short- or long-term. The proposed project itself will be an improvement to area services and community resources (landscaping) that will benefit the overall population.

4.8.8 Sole Source Aquifer

Although the concept of sole source aquifer would seem to apply to the Mojave River Basin, including the Alto Subbasin, this term "sole source aquifer" refers to an aquifer that has been formally designated by the federal Environmental Protection Agency (EPA). There are nine (9) federally designated sole source aquifers within the EPA Region IX's management area. None occur in or near the Mojave River watershed. The closest designated sole source aquifers are the Ocotillo-Coyote Wells Aquifer and the Campo/Cottonwood Creek Aquifer and both are located near the California/Mexico border. Therefore, no potential exists for the proposed project to adversely impact any designated sole source aquifer resource.

As the preceding data and analysis indicate, the proposed project does not have any potential to cause a substantial adverse impact to any of the above resources that are unique to the NEPA environmental review process. One mitigation measure is required to control the potential for invasive plant species impacts related to ground disturbance and introduction of construction equipment from outside of the project area. This measure has been included in the Biology Subchapter of this DEIR, Subchapter 4.3.

This page left intentionally blank for pagination purposes.

CHAPTER 5 – ALTERNATIVES

5.1 INTRODUCTION

The California Environmental Quality Act (CEQA) and the State CEQA Guidelines require an evaluation of alternatives to the proposed action when a project may cause a significant adverse impact on the environment. The project facilities that would be implemented under the Subregional WRP Project have been evaluated for potential significant adverse impacts in Chapter 4 of this document and the Initial Study in Appendix 8.1. Based on the analysis in these sections of the DEIR, implementation of the Subregional WRP Project is not forecast to cause any direct significant adverse environmental effects, nor is it forecast to contribute to cumulatively considerable impacts in the Victor Valley or areas downstream in the Mojave River Basin, after implementation of identified mitigation measures. The purpose of the alternatives evaluation under CEQA is to determine whether one or more feasible alternatives are capable of reducing any potentially significant adverse environmental impacts of a preferred project to a less than significant level. The applicable text in the State CEQA Guidelines occurs in Section 15126 as follows:

Section 15126.6(a): *Alternatives to the Proposed Project. An EIR shall describe a range of reasonable alternatives to the project, or to the location of the project, which would feasibly attain most of the basic objectives of the project but would avoid or substantially lessen any of the significant effects of the project, and evaluate the comparative merits of the alternatives. An EIR need not consider every conceivable alternative to a project. Rather it must consider a reasonable range of potentially feasible alternatives that will foster informed decision making and public participation.*

Section 15126.6(b) *Purpose. Because an EIR must identify ways to mitigate or avoid the significant effects that a project may have on the environment (Public Resources Code Section 21002.1), the discussion of alternatives shall focus on alternatives to the project or its location which are capable of avoiding or substantially lessening any significant effects of the project, even if these alternatives would impede to some degree the attainment of the project objectives or would be more costly.*

In this instance the DEIR environmental impact evaluation in Chapter 4 and the Initial Study has reached a finding that no unavoidable significant adverse effects will result from implementing the proposed Subregional WRP Project as proposed in Chapter 3, the Project Description. Regardless, a range of feasible alternatives to the Subregional WRP Project has been selected and will be discussed in a manner to foster meaningful public participation and informed decision making. Among the factors that may be taken into account when addressing the feasibility of alternatives are environmental impacts, site suitability, economic viability, availability of infrastructure, regulatory limitations, jurisdictional boundaries and whether the applicant could reasonably acquire, control, or otherwise have access to the alternative option. (CEQA Guidelines § 15126.6(f) (1))

Since management of wastewater resources in the Victor Valley is an alternative regional location for the project. Thus, an alternative regional location evaluation in this DEIR is rejected as infeasible and unable to meet basic project objectives, i.e., the objective of managing the

wastewater resources generated in the Victor Valley by installing upstream "scalping plants" to generate recycled water for use in a manner to meet future water supply demands/requirements within the Alto Subbasin portion of the Mojave River Basin. A project outside of the Alto Subbasin cannot reasonable achieve this fundamental objective.

One of the alternatives that must be evaluated in an EIR is the "no project alternative," regardless of whether it is a feasible alternative to the Project, i.e. would meet the project objectives or requirements. Under this alternative, the environmental impacts that would occur if the Subregional WRP Project is not implemented are evaluated. However, under a no project alternative, wastewater management activities in the Victor Valley must continue to function; therefore, by default, the Westside Regional WRP would have to continue operating to treat the collected wastewater and discharge it as authorized under the waste discharge permit issued to VVWRA by the Lahontan Regional Board. Thus, under the no project alternative the default scenario is to expand the Westside WRP to meet future demand for wastewater capacity and continue to treat wastewater for discharge to the Mojave River and to the percolation ponds adjacent to the Westside WRP.

Three additional alternatives are considered for evaluation in this Chapter of the DEIR based on original design considerations, input from the public and the identification of a site specific constraint at one of the WRP sites. The first of these three alternatives is Alterative 1, which is an alternative location for the City of Hesperia Subregional WRP that is identified in Chapter 3, Project Description, of this DEIR. The second alternative is a modified design for the WRPs that would incorporate a Reverse Osmosis (RO) treatment unit which could reduce concentrations of most of the water pollutants of concern in the treated effluent (recycled water). The final alternative considered is an alternative location for the Apple Valley WRP. The existing site was selected because it already contains existing wastewater facilities at a centralized location in the Town, Brewster Park. However, Brewster Park is shown on the FEMA FIRM panel for this proposed Subregional WRP site as being just within the northwestern edge of the 100-year flood hazard zone associated with Apple Valley Dry Lake. An alternative location outside of the 100-year flood hazard zone, the Alternative 1 Percolation Basin, was selected for evaluation as the alternative to the Brewster Park location.

Therefore, the following alternatives to the proposed project will be considered in this Chapter:

- No Project
- City of Hesperia WRP Alternative Site No. 1
- A Modified WRP Treatment Train to Include Reverse Osmosis
- An Alternative Site to the proposed Apple Valley WRP Site at Brewster Park

5.2 NO PROJECT

A summary comparative discussion of the no project alternative in terms of the specific issues evaluated in this DEIR (air quality, biological resources (land use, habitat conservation management plans), cultural resources, hydrology and water quality (utilities and service systems, water supply and compliance with waste discharge requirements), noise, and population and housing, and utilities/service systems (adequacy of water supply)) follows.

Air Quality: The proposed Subregional WRP Project facilities can be constructed and operated without exceeding local emission significance thresholds and in conformity with federal regulations. The no project alternative would require that segments of the existing regional wastewater collection system be replaced and additional capacity added to the Westside Regional WRP. It is not clear whether additional ponds would have to be constructed to receive treated effluent from this WRP for percolation. This alternative would eliminate installation of pipelines; construction of the Subregional WRPs; the Hesperia lift station; and the percolation basins. Based on the air pollution emission forecast from installing the Subregional WRPs, short-term air emissions from the no project alternative are estimated to be comparable to the proposed project. Further, operational air emissions, almost totally electricity consumption, would be approximately the same for the Westside WRP as the two Subregionals. Therefore, the potential air quality effects of the no project alternative are estimated to be equivalent to that forecast for the Subregional WRP project.

Biological Resources: The proposed project's biological resource impacts are identified as being less than significant, with limited mitigation. The No Project Alternative will be required to construct through the Upper Narrows and a portion of the Lower Narrows. Based on past experience, potential biological resource impacts can be severe through the riparian habitat and waters of both the United States and State of California. A potential for unavoidable significant biological impact is a high probability under this alternative. Mitigation may be feasible for this alternative, but a very high cost for installing a new regional collection pipeline will result when compared to the proposed project. Thus, the No Project Alternative has a much higher comparative potential for significant biological resource impacts during construction when compared to the proposed project. During operations additional discharges of treated effluent will be required to be released into the Mojave River channel or into new percolation ponds. The effect of these discharges is evaluated in the CIA and concluded to be feasible without causing significant adverse biological resource impacts, which is comparable to the operational effects of Subregional WRP Project.

Cultural Resources: The proposed project's cultural resource impacts are identified as being less than significant, with limited mitigation. Based on past experience and on the alternative locations where construction activities will occur within the Mojave River channel, a much higher probability of significant cultural resources exists within the No Project area of potential effect (APE). Therefore, the potential for significant cultural resource impacts is greater under the NO Project alternative. Mitigation may be feasible for this alternative, but a very high cost for installing a new regional collection pipeline will result when compared to the proposed project.

Hydrology and Water Quality: The proposed project has a potential to cause some less than significant groundwater quality degradation and it will alter drainage at the facility site locations both during construction and operation, which can result in less than significant flooding and erosion and sedimentation, based on implementation of mitigation measures. The same general circumstances affect the construction of the No Project Alternative, but the water quality and flood hazards are greater for the installation of the regional collection system. The No Project Alternative construction water quality and hydrology impacts are mitigable, but subject to greater flood hazards due to construction activities within the active channel of the Mojave River. Also, this alternative will not provide recycled water within the local communities nor offset the use of potable water, so the water resource benefits to the Alto Subbasin may be lost.

During operations the No Project Alternative will discharge additional flows to the Mojave River and it is assumed that this can be done without significantly degrading surface flows in the River or the floodplain groundwater aquifer where the treated effluent ultimately percolates. It is anticipated that the water quality effects from implementing the No Project Alternative will be comparable to that which would occur from the Subregional WRP Project. What will be lost is the benefit to the Alto Subbasin of losing the recycled water and failure to support objectives established in MWA's RWMP. In this context, the No Project Alternative is not as environmentally superior as the proposed project.

Noise: The proposed project is forecast to generate noise during construction and operations, but with implementation of mitigation measures, the noise impacts are forecast to be less than significant. The No Project Alternative will have the same type of noise effects, but due to the greater isolation from sensitive receptors, the impacts of this alternative over the short- and long-term should be less when compared to the proposed project.

Population and Housing: Neither alternative is considered to generate significant population growth and neither alternative is forecast to have any direct effects on housing resources of the Victor Valley. On balance both alternatives are comparable for the population and housing issues, which are generally independent of wastewater management activities in a community.

In the final analysis, the No Project Alternative clearly cannot be considered the environmentally superior alternative to the proposed project from a total environmental standpoint, because the environmental damage to potential biological and cultural resources from implementing this alternative is forecast to cause substantially more significant adverse impacts than implementing the proposed project.

5.3 CITY OF HESPERIA WRP ALTERNATIVE SITE NO. 1

Two alternative locations were evaluated in the DEIR for the City of Hesperia WRP. This is because VVWRA and the City wished to consider one site that would be isolated from City urban/suburban development. Even though, the Alternative 1 site is feasible the overall impacts were evaluated as being greater than the proposed project, as outlined in the following text. This is a partial alternative as it cannot replace the whole Subregional WRP Project.

Air Quality: The proposed Subregional WRP Project facilities can be constructed and operated without exceeding local emission significance thresholds and in conformity with federal regulations. The Alternative 1 project alternative would require that substantial additional segments of pipeline be installed. Overall pipeline construction emissions would increase by about 50%, but it was concluded that these emissions, which occur on a daily basis, could be controlled to a less than significant impact level. Annual construction emissions would not exceed the federal conformity requirements for Alternative 1. Operational air emissions for both alternatives would be the same. Therefore, the potential air quality effects of the Alternative 1 facility in Hesperia alternative are estimated to be only slightly greater than that of the proposed project.

Biological Resources: The proposed project's biological resource impacts are identified as being less than significant, with limited mitigation. The Alternative 1 impacts will be greater because this site is located in an area where mitigation is required for Mohave ground squirrel

and a higher potential exists to encounter desert tortoise. Mitigation is probable for these additional impacts, but the contribution to cumulative loss of habitat for these species makes this alternative less environmentally superior when compared to the proposed project.

Cultural Resources: The proposed project's cultural resource impacts are identified as being less than significant, with limited mitigation. Based on the cultural resources evaluation, the Alternative 1 site and alignment do not contain any significant cultural resources. Thus, the potential cultural resource impacts of the two alternatives are comparable, with no environmentally superior alternative.

Hydrology and Water Quality: The proposed project has a potential to cause some less than significant groundwater quality degradation and it will alter drainage at the facility site locations both during construction and operation, which can result in less than significant flooding and erosion and sedimentation, based on implementation of mitigation measures. The same general circumstances affect the construction of the Alternative 1 Hesperia facilities, but the water quality and flood hazards are greater for the installation of this alternative due to the longer pipelines. With the exception of greater construction disturbance and slightly greater slope at the Alternative 1 site, the overall hydrology and water quality impacts are approximately the same for both construction and operations.

Noise: The proposed project is forecast to generate noise during construction and operations, but with implementation of mitigation measures, the noise impacts are forecast to be less than significant. The Alternative 1 site will have the same type of noise effects, but due to the greater isolation from sensitive receptors, the impacts of this alternative over the short- and long-term should be less when compared to the proposed project.

Population and Housing: Neither alternative is considered to generate significant population growth and neither alternative is forecast to have any direct effects on housing resources of the Victor Valley. On balance both alternatives are comparable for the population and housing issues, which are generally independent of wastewater management activities in a community.

In the final analysis, the Alternative 1 option cannot be considered the environmentally superior alternative to the proposed project from a total environmental standpoint, because the environmental damage to potential biological from implementing this alternative is forecast to cause more significant adverse impacts than implementing the proposed project and require substantially greater mitigation.

5.4 A MODIFIED WRP TREATMENT TRAIN TO INCLUDE REVERSE OSMOSIS

This alternative is evaluated in the Hydrology/Water Quality section of the DEIR (Subchapter 4.5) and in the CIP prepared by LWA. It was included to evaluate whether it is a necessary facility to meet antidegradation requirements of the State of California. The conclusion in the CIA, and consequently the DEIR, is that it is not required because the proposed treatment train for the Subregional WRPs will not cause significant groundwater degradation and will conform with antidegradation requirements. Regardless, it does achieve some water quality benefits, particularly with regard to total mass loading of the Alto Subbasin with salts. Table 4.5-20 contains a summary of the reductions in mass loading achieved by adding Reverse Osmosis (RO) to the Subregional WRPs.

Air Quality: The proposed Subregional WRP Project facilities can be constructed and operated without exceeding local emission significance thresholds and in conformity with federal regulations. The installation of an RO unit at the WRPs would add minimal construction emissions, but it would substantially increase energy (electricity) emissions because RO is an energy intensive process. Because air pollutant emissions from electricity generation are relatively low, the additional air pollution impact is not considered significant. Depending upon how the reject water (brine) is managed, it is possible that additional disturbance at the WRPs would be required to store and concentrate the brine for disposal, and the brine would have to be transported to a disposal location (undefined). These additional construction and operation emissions (unlikely to be significant) would make this a less environmentally superior alternative.

Biological Resources: The proposed project's biological resource impacts are identified as being less than significant, with limited mitigation. The installation of an RO unit at the WRPs would not modify the biological resources impacts identified for the proposed project. Thus, the potential biological resource impacts of the two alternatives are comparable, with no environmentally superior alternative.

Cultural Resources: The proposed project's cultural resource impacts are identified as being less than significant, with limited mitigation. The installation of an RO unit at the WRPs would not modify the cultural resources impacts identified for the proposed project. Thus, the potential cultural resource impacts of the two alternatives are comparable, with no environmentally superior alternative.

Hydrology and Water Quality: The proposed project has a potential to cause some less than significant groundwater quality degradation and it will alter drainage at the facility site locations both during construction and operation, which can result in less than significant flooding and erosion and sedimentation, based on implementation of mitigation measures. The hydrology and water quality changes during construction will not change as a result of implementing the RO alternative, but if additional facilities are required to manage the brine the more site disturbance would result. The effect on surface water management would be to require more expensive mitigation, but it is assumed these construction effects can be controlled/managed to a less than significant impact level. The benefit gained from this alternative is a reduction in the concentration of pollutants in the recycled water and a reduction the total mass loading in the Alto Subbasin. Thus, the addition of an RO treatment train is relatively the environmental superior alternative, but these reductions do not change the finding that the proposed project does not result in a significant adverse water quality impact. The antidegradation evaluation in the Subchapter 4.5 and the CIA concluded that these reductions do not appear justified due to the increased project construction and operation costs.

Noise: The proposed project is forecast to generate noise during construction and operations, but with implementation of mitigation measures, the noise impacts are forecast to be less than significant. The installation of an RO unit at the WRPs would not modify the noise impacts identified for the proposed project. Thus, the potential noise impacts of the two alternatives are comparable, with no environmentally superior alternative.

Population and Housing: Neither alternative is considered to generate significant population growth and neither alternative is forecast to have any direct effects on housing resources of the

Victor Valley. The installation of an RO unit at the WRPs would not modify the population and housing impacts identified for the proposed project. Thus, the potential population and housing impacts of the two alternatives are comparable, with no environmentally superior alternative.

In the final analysis, the RO treatment train alternative can be considered the environmentally superior alternative to the proposed project from a water quality standpoint, but it would result in greater air emissions during operations and the proposed project is considered the environmentally superior alternative for this issue. Given that both alternatives can be implemented without significant adverse impacts, there does not appear to be overall environmental superiority for either alternative.

5.5 AN ALTERNATIVE SITE TO THE PROPOSED APPLE VALLEY WRP SITE AT BREWSTER PARK

As indicated in the introduction to this Chapter, this alternative is being considered because the proposed project is located within the 100-year flood hazard area of Apple Valley Dry Lake as defined by the project area FEMA FIRM panel. The Brewster Park site currently houses existing wastewater facilities, and the Town and VVWRA determined that because of these existing facilities, the Park would be the best site for the proposed Apple Valley WRP. Based on the finding that the Park is located within the 100-year flood hazard zone, mitigation was identified to harden (protect) the proposed WRP facilities from the identified flood hazards. Since the Park is on the edge of this zone, hardening can be readily accomplished by surrounding the WRP with a small elevated, landscaped berm or otherwise protecting the actual WRP structures and facilities from the flood hazard. However, to address this issue in a different manner than onsite mitigation, it was decided to consider an alternative WRP site not exposed to the 100-year flood hazard zone associated with the Dry Lake.

Air Quality: The proposed Subregional WRP Project facilities can be constructed and operated without exceeding local emission significance thresholds and in conformity with federal regulations. The relocation of the Apple Valley WRP to the Alternative 1 Percolation Basin site will require revising the overall flow of wastewater for the Town and due to the higher elevation of the alternative site, more energy will be required deliver the wastewater to the project site. Overall construction emissions would remain comparable between the two sites, but operational emissions would be increased due to additional electricity consumption. Because air pollutant emissions from electricity generation are relatively low, the additional air pollution impact is not considered significant. The additional operation emissions (unlikely to be significant) would make this a less environmentally superior alternative.

Biological Resources: The proposed project's biological resource impacts are identified as being less than significant, with limited mitigation. The relocation of the WRP to the Alternative 1 Percolation Basin site would not modify the biological resources impacts identified for the proposed project. Thus, the potential biological resource impacts of the two alternatives are comparable, with no environmentally superior alternative.

Cultural Resources: The proposed project's cultural resource impacts are identified as being less than significant, with limited mitigation. The relocation of the WRP to the Alternative 1 Percolation Basin site would not modify the cultural resources impacts identified for the

proposed project. Thus, the potential cultural resource impacts of the two alternatives are comparable, with no environmentally superior alternative.

Hydrology and Water Quality: The proposed project has a potential to cause some less than significant groundwater quality degradation and it will alter drainage at the facility site locations both during construction and operation, which can result in less than significant flooding and erosion and sedimentation, based on implementation of mitigation measures. The hydrology and water quality changes during construction will not change as a result of installing the WRP at the Basin site, but if additional facilities are required to deliver the wastewater to the alternative site this would result in additional ground disturbance and related surface runoff management requirements. Assuming that this site could be designed to efficiently accomplish the WRP objectives, the operational effects on water quality will be the same for both locations. The benefit of this alternative location is that it eliminates exposure to the 100-year flood hazard zone associated with Apple Valley Dry Lake. Thus, based on this relative comparison, the alternative site location for the WRP is marginally environmentally superior to the proposed project site at Brewster Park.

Noise: The proposed project is forecast to generate noise during construction and operations, but with implementation of mitigation measures, the noise impacts are forecast to be less than significant. The selection of this alternative site for the WRP would not modify the noise impacts identified for the proposed project. However, due to the presence of fewer sensitive noise receptors, the alternative site can be considered marginally environmentally superior.

Population and Housing: Neither alternative is considered to generate significant population growth and neither alternative is forecast to have any direct effects on housing resources of the Victor Valley. The selection of this alternative site for the WRP would not modify the population and housing impacts identified for the proposed project. Thus, the potential population and housing impacts of the two alternatives are comparable, with no environmentally superior alternative.

In the final analysis, the alternative site for the Apple Valley WRP can be considered the environmentally superior alternative relative to exposure to flood hazards and marginally superior relative to noise impacts. However, from an air quality standpoint the alternative site option is less environmentally superior. Finally, relocating the wastewater treatment facilities to this alternative site would require major revisions to the project engineering and it may not be a feasible alternative. Given that the proposed project can be implemented without significant adverse impacts, there does not appear to be overall environmental superiority for either alternative.

5.6 CONCLUSION

The proposed project is considered environmentally superior to the No Project Alternative due to the potential for significant biology and cultural resources impacts of reconstructing the regional collection system. This alternative is also not considered feasible because it will not fulfill the project objectives defined in Chapter 3. The proposed project is also considered environmentally superior to the City of Hesperia WRP Alternative 1 site location, primarily due to biology issues at this location and increased air emissions from installing support facilities. The RO treatment train alternative reduces concentration of pollutants in the recycled water, but

based on the analysis in Subchapter 4.5 and the CIA, this reduction in pollutant concentrations is not required to meet water quality standards (the proposed project meets this requirement) and this alternative is not required to meet waste discharge requirements for the WRPs. The RO treatment alternative will generate more air emissions over the long-term and is less environmentally superior relative to this issue. Keep in mind both the proposed project and the RO treatment alternative are not forecast to cause significant adverse environmental effects if implemented.

Finally, the relocation of the Apple Valley WRP to a site outside of the 100-year flood hazard zone surrounding Apple Valley Dry Lake can reduce potential exposure to this hazard, but mitigation is available to protect this WRP at the Brewster Park site. On balance, an alternative Apple Valley WRP site is marginally environmentally superior for hydrology and noise issues, but it would have greater air quality impacts over the long term. It is also not clear that the relocation of the Apple Valley WRP is feasible from the standpoint of integration into an efficient regional recycled water system. With no significant impacts forecast from implementing the proposed project, the Subregional WRP Project, there is no clear environmentally superior alternative between the proposed project, RO alternative and the Alternative Apple Valley WRP location because none of them appear to cause significant adverse impacts.

This page left intentionally blank for pagination purposes.

CHAPTER 6 – TOPICAL ISSUES

6.1 GROWTH INDUCEMENT

CEQA requires a discussion of the ways in which a project could be growth-inducing. (Pub. Resources Code, § 21100, subd. (b)(5); CEQA Guidelines, §§ 15126, subd. (d), 15126.2, subd. (d)). The CEQA Guidelines identify a project as growth-inducing if it would foster economic or population growth or the construction of additional housing, either directly or indirectly, in the surrounding environment. New employees from commercial or industrial development and new population from residential development represent direct forms of growth. These direct forms of growth have a secondary (indirect) effect of expanding the size of local markets and inducing additional economic activity in an area. Under CEQA, growth inducement is not considered necessarily detrimental, beneficial, or of little significance to the environment. (CEQA Guidelines § 15126.2, subd. (d))

A project could indirectly induce growth by reducing or removing barriers to growth, or by creating a condition that attracts additional population or new economic activity. However, a project's potential to induce growth does not automatically result in growth. Growth can only happen through capital investment in new economic opportunities by the private or public sectors. Development pressures are a result of economic investment in a particular locality. The current recession in southern California is a good example of how indirect growth is affected by this primary stimulus. Without the increase in demand for services and utilities growth demand stops and these service and utility infrastructure systems do not have to grow to meet new demand. In fact, as a result of the current recession, many services and utilities have experienced a reduction in demand for water resources. These economic pressures or incentives help to structure the local politics of growth and the local jurisdiction's posture on growth management and land use policy. The land use policies of local municipalities and counties regulate growth at the local level, not the actions and policies of utility agencies, such as a wastewater management agency, such as the VVWRA.

Growth inducement may also occur if a project provides infrastructure or service capacity that accommodates growth beyond the levels currently permitted by local or regional land use plans in policies. This type of induced growth leads to conversion of adjacent acreage to higher intensity uses, either unexpectedly or through accelerated development. This conversion occurs because the adjacent land becomes more suitable for development and, hence, more valuable because of the availability of the new infrastructure.

6.1.1 Direct Growth-Inducing Effects

The Subregional WRP Project will implement a recycled water program in accordance with VVWRA objectives and objectives established by the Mojave Water Agency (MWA) in its RWMP. This proposed project is designed to implement a coherent program for meeting water supply requirements while diverting a substantial volume of wastewater to scalping plants that will defer or eliminate the need to expand the capacity of the regional wastewater collection system that delivers wastewater to the Westside Regional WRP. Thus, based on the population estimates forecast through 2022, this project will assist the VVWRA to meet its wastewater management responsibilities for the forecast population and demand for wastewater treatment

capacity through this date. This project does not propose creation of housing, industrial facilities or commercial facilities that could directly induce growth in the region. Also, the Subregional WRP Project does not include the creation of a substantial number of new jobs.

The Project would result in the installation of a variety of new facilities and a modification to overall operation of the VVWRA wastewater management system to achieve specific management goals of VVWRA and MWA. It is anticipated that short-term construction activities would be met from existing construction companies in the community, which have downsized as a result of the current recession. Based on the rate of future Subregional WRP Project implementation and the availability of construction companies and workers, no new growth is forecast to be induced by the construction workforce. The continued and expanded operations and efforts envisioned by the proposed project will not generate a substantial increase in employment or induce substantial growth. Based on the foregoing analysis and findings, the future implementation of the Subregional WRP Project will not directly result in any significant population growth, and would not result in population growth for the Victor Valley cities and communities beyond that reflected in adopted SCAG and General Plan growth projections.

6.1.2 Indirect Growth-Inducing Effects

The Subregional WRP Project will not cause or contribute to non-project-related “leap frog” or “premature” development because the purpose of the program is to provide recycled water for use in landscape irrigation or industrial uses to offset the need to utilize potable groundwater resources for these same uses. As noted above, this project does not generate a large number of new jobs. It will result in more infrastructure construction within the Victor Valley, but due to the current recession and attendant high unemployment rate, no significant influx of new construction workers is forecast to occur in the project area. The indirect effect of implementing the proposed project is not forecast to cause substantial indirect growth inducing effects.

The position taken in this document is that the utility planning process is more appropriately playing a passive (accommodating) role, not an active (inducing) role, in future population and community growth that is dictated by local land use plans and the continuing growth of population throughout southern California. If communities within the project area chose to restrict growth and maintain a certain vision of the future as a static or slowly growing entity, the land use planning agencies (cities and counties) had the opportunity during the general planning process to establish such plans. Under such circumstances, the water utilities would have designed their future service plans to accommodate a level of future growth consistent with available resources.

In reality, however, the water management agencies (water suppliers and wastewater treatment), acting as responsible water planning agencies, must plan for a level of future growth that appears to match available water resources with forecast growth through the 2022 planning horizon. At present the domestic water agency water supply plans rely almost totally on groundwater resources of the Mojave River Basin and to a limited extent on water importation. The proposed project provides an alternative wastewater management program for the Victor Valley that is designed to reduce reliance on both groundwater and imported water. Implementation of the proposed Subregional WRP Project will contribute a new supply of water that will allow the water supply agencies to accommodate growth as envisioned in the applicable area

general plans. Based on this analysis, implementation of the Subregional WRP Project is not considered to be a significant growth inducing action.

6.2 CUMULATIVE IMPACTS

The following text summarizes the cumulative impact analysis provided in Chapter 4. The intent of a cumulative impact evaluation is to provide the public and decision-makers with an understanding of a given project's contributions to area-wide or community environmental impacts when added to other or all development proposed in an area. The state CEQA Guidelines provide two alternative methods for making cumulative impact forecasts: (1) a list of past, present and reasonably anticipated projects in the project area, or (2) the broad growth impact forecast contained in general or regional plans. Because of the project specific character of this project, it will be evaluated in the context of other projects in the general area. VVWRA is in the process of upgrading the Westside Regional WRP, but the location is more than 10 miles from the two proposed project locations. The MWA is in the process of implementing regional water resource management project, including new pipelines, structures and recharge basins. No other projects were identified within the project area or vicinity that would contribute to cumulative impacts or cumulative demand for local water/wastewater infrastructure.

The cumulative impacts of implementing the proposed project are outlined in Chapter 4 for each environmental issue. The DEIR concluded that no significant adverse impact, including cumulative effects, would result from implementing the Subregional WRP Project for all issues evaluated in the DEIR and Initial Study. These include: aesthetics, agriculture, air quality, biological resources, cultural resources, geology and soils, hazards, hydrology/water quality, land use, mineral resources, noise, population/housing, public services, recreation, transportation/traffic, and utilities and service systems. As noted, all these issues were found to have a less than significant impact and are addressed in Chapter 4 and Appendix 1 of this document.

For the issues evaluated in this DEIR, air quality, biological resources, cultural resources, hydrology/water quality, noise and population/housing, the following summary of cumulative effects is provided. The reader should also refer to the text for each issue in Chapter 4 for a more contextual discussion of cumulative effects...

6.2.1 Air Quality

Implementation of the Peace II Agreement will contribute pollutants to the MDAB from construction and operation of the proposed facilities. The proposed facilities are designed to implement a recycled water system project to provide an alternative to further expansion of the Westside Regional WRP and to offset demand for and extraction of potable groundwater for the Alto Subbasin. An updated analysis of cumulative air emissions from implementing the proposed project was compiled, including performing a federal conformity analysis for the proposed project. Based on the implementation assumptions, site specific emissions for individual projects, such as pipelines, lift stations and Subregional WRPs, were found to generate less than significant air pollutant emissions. Similarly, the operational emissions for future facilities required to support the recycled water projects were found to be less than significant. The air pollution modeling analysis indicates that cumulative emissions, implemented with the identified mitigation measures designed to reduce air pollution emissions to the

maximum extent feasible, will not exceed the MDAQMD CEQA thresholds of significance. The same conclusion was reached for future Subregional WRP operating air emissions. Also, the overall project was found to be consistent with the federal conformity requirements. Overall, a finding of less than considerable or less than significant cumulative impact has been made for the air quality issue.

6.2.2 Biology Resources

There are substantial biological resource values within the planning area, primarily within the Mojave River channel, but also west of Interstate 15. However, the investigations determined that the proposed Subregional WRP facilities required to implement VVWRA's recycled water system program will be located within existing developed or highly disturbed settings where no potential for significant impact to biological resources can occur. For those future facility locations with native biological resources (such as the City of Hesperia Alternative 1 WRP site), mitigation is identified to reduce or compensate for potential biological resource effects. No cumulatively considerable effects due to loss of habitat or impact to sensitive species is forecast to occur based on the ability to avoid, reduce or compensate for future projects proposed for sensitive biological resource locations. Thus, in total the Subregional WRP Project is not predicted to cause any cumulatively considerable biology resource impacts.

6.2.3 Cultural Resources

There are substantial cultural resource values within the planning area, primarily within the Mojave River channel and Old Town Victorville. However, the investigations determined that the proposed Subregional WRP facilities required to implement VVWRA's recycled water system program will be located within existing developed or highly disturbed settings where no potential for significant impact to cultural resources can occur. For those future facility locations with potential subsurface cultural resources (such as the area north of the Apple Valley WRP site), mitigation is identified to avoid or collect/curate/publish material and information for potential cultural resource effects. No cumulatively considerable effects due to significant impact to sensitive cultural resources are forecast to occur based on the ability to avoid, reduce or publish information on potentially significant cultural locations. Thus, in total the Subregional WRP Project is not predicted to cause any cumulatively considerable cultural resource impacts.

6.2.4 Hydrology & Water Quality

The proposed project consists of the installation of facilities (WRP, pipelines, lift station, etc.) to implement produce and deliver recycled water for suitable uses within the Alto Subbasin as defined in Chapter 3. One specific objective of Subregional WRP Project is to provide recycled water for use in the Alto Subbasin, while meeting water quality objectives and antidegradation requirements for the Alto Subbasin established by the Lahontan Regional Water Quality Control Board (Region #6). The quantitative analysis for water quality and antidegradation effects demonstrate that cumulative effects of recycled water use is not forecast to result in a cumulatively considerable degradation of groundwater quality in the Alto Subbasin. In addition for other hydrology issues, such as flooding or surface water quality degradation, no cumulatively considerable adverse impacts will affect the following hydrology and water quality issues: water supply, water quality, and flood hazards (both exposure to and creation of). Thus,

based on the analysis in this DEIR, no cumulatively significant/considerable adverse hydrology or water quality impacts are forecast to occur due to the proposed project.

6.2.5 Noise

There are sensitive noise receptors adjacent to proposed construction sites and proposed WRP permanent above ground facility sites. A noise analysis is inherently cumulative because it considers the new sources of noise in the framework of the noise background setting. First, no additional projects have been identified in the project areas that will also generate noise. So the proposed project, plus the background noise environment, represents the potential cumulative noise exposure for these receptors. Mitigation has been required that will control both short-term (construction) activities and long-term (operating) activities. Based on implementation of these measures, the proposed project's cumulative noise effects are less than significant and are not cumulatively considerable.

6.2.6 Population and Housing

Because this proposed project has no potential to adversely impact any housing resources and is not forecast to cause any permanent population increase, it cannot cause or contribute to any cumulatively considerable population or housing impacts.

6.3 SIGNIFICANT IRREVERSIBLE ENVIRONMENTAL CHANGES

The CEQA Guidelines §§ 15126, subd.(c), 15126.2 subd.(c), 15127, require that for certain types or categories of project, an EIR must address significant irreversible environmental changes that would occur should the Project be implemented. As presented at Guidelines § 15127, the topic of Significant Irreversible Environmental Changes need be addressed in EIRs prepared in connection with any of the following activities:

(a) The adoption, amendment, or enactment of a plan, policy, or ordinance or a public agency;

(b) The adoption by a local agency formation commission of a resolution making determinations; or

(c) A project which will be subject to the requirements for preparing of an environmental impact statement pursuant to the requirements of the National Environmental Policy Act of 1969, 42 U.S.C. 4321-4347.

The project does not qualify under any of these criteria. Regardless, the project will cause many changes, none of which are irreversible, but they may be long-term changes. The Subregional WRPs are forecast to divert wastewater from the Westside Regional WRP into the indefinite future. Also, the percolation of any recycled water into the Alto Subbasin aquifer will add salts to the groundwater aquifer for the indefinite future. However, note that the future wastewater treatment systems can be modified in the future and the salts can be extracted, obviously at a high cost. But these impacts are not permanently irreversible.

6.4 SIGNIFICANT UNAVOIDABLE ENVIRONMENTAL IMPACTS

The CEQA Guidelines §§15126.2, subd. (b) require that an EIR describe significant impacts where the impacts cannot be alleviated without making it infeasible to achieve project objectives. This DEIR has identified no unavoidable significant adverse impacts from implementing the Subregional WRP Project.

CHAPTER 7 – PREPARATION RESOURCES

7.1 REPORT PREPARATION

7.1.1 Lead Agency

Victor Valley Wastewater Reclamation Authority
15776 Main Street, Suite 3
Hesperia, California 92345
(760) 948-9849

– Logan Olds

7.1.2 EIR Consultant

Tom Dodson & Associates
2150 North Arrowhead Avenue
San Bernardino, CA 92405
(909) 882-3612

– Tom Dodson
– Shay Lawrey
– Shawn Gatchel-Evans
– Christine Camacho

7.1.3 EIR Technical Consultants

CRM TECH, Cultural Resources
Giroux & Associates, Noise and Air Quality Analyses
Larry Walker Associates, Cumulative Impact Analysis

7.2 BIBLIOGRAPHY

Town of Apple Valley, 2009 General Plan and General Plan EIR

Carollo Engineers, "City of Hesperia WRP, Preliminary Design Report," FINAL, December 2009

Carollo Engineers, "Hesperia Lift Station and Force Mains, Preliminary Design Report," FINAL, December 2009

Carollo Engineers, "Town of Apple Valley WRP, Preliminary Design Report," FINAL, December 2009

CRM TECH, "Identification and Evaluation of Historic Properties, Town of Apple Valley and City of Hesperia Wastewater Reclamation Plants and Related Facilities Projects," September 22, 2010

Federal Emergency Management Agency (FEMA), Flood Insurance Rate Maps (FIRM), Map Number 06071C, Panels 5840H, 5845H, 6480H, and 6485H

Giroux & Associates, "Air Quality Impact Analysis for VVWRA Reclamation Facilities," September 3, 2010

Giroux & Associates, "Noise Impact Analysis for VVWRA Reclamation Facilities," September 23, 2010

HDR, "Westside Water Reclamation Plant Phase III Design Summary," March 1998

Larry Walker Associates, "Victor Valley Wastewater Reclamation Authority Cumulative Impact Analysis Final Draft," September 2010

Mojave Water Agency, "2004 Regional Water Management Plan, Volume 1: Report," September 2004

Pacific EcoRisk, "Mojave River Characterization Study: 2008 Bioassessment Monitoring," June 2009

Pacific EcoRisk, "Mojave River Characterization Study: 2009 Bioassessment Monitoring," December 2009

RBF Consulting, "VVWRA Flow Project Update," Update 3 – April 2009

San Bernardino County 2008, General Plan and General Plan EIR

Tom Dodson & Associates, "General Biological Resources Assessment and Habitat Suitability Evaluation Report for the Town of Apple Valley and City of Hesperia Water Reclamation Plants and Related Facilities Project," October 2010

CHAPTER 8 – APPENDICES

8.1 NOTICE OF PREPARATION / INITIAL STUDY

8.2 NOP MAILING LIST / NOP COMMENT LETTERS

APPENDIX 8.1

NOTICE OF PREPARATION / INITIAL STUDY

VICTOR VALLEY WASTEWATER RECLAMATION AUTHORITY
A Joint Powers Authority and Public Agency of the State of California
Administrative Offices
15776 Main Street, Suite 3
Hesperia, CA 92345
Phone: (760) 948-9849
Fax: (760) 948-9897

MEMORANDUM

May 26, 2010

FROM: Victor Valley Wastewater Reclamation Authority

TO: Responsible and Trustee Agencies/Interested Organizations and Individuals

RE: Notice of Preparation of an Environmental Impact Report (EIR) for the Victor Valley Wastewater Reclamation Authority: Town of Apple Valley Wastewater Reclamation Plant, City of Hesperia Wastewater Reclamation Plant, and Related Facilities

The Victor Valley Wastewater Reclamation Authority (VVWRA) will serve as the Lead Agency under the California Environmental Quality Act (CEQA) and will coordinate the preparation of an Environmental Impact Report (EIR) that will evaluate the potential significant environmental impacts that may result from constructing and operating two subregional wastewater reclamation facilities: Town of Apple Valley Wastewater Reclamation Plant, City of Hesperia Wastewater Reclamation Plant (WRP), and Related Facilities. The wastewater would be treated to meet Title 22 standards and the recycled water produced from the two proposed WRPs could be used for landscape irrigation, industrial operations and recharge to the regional groundwater aquifer in the Alto Subbasin of the Mojave River Basin. An Initial Study has been prepared for the proposed project which identifies the potentially significant environmental impacts of the project. Those issues with a potential to cause or experience significant impact are as follows: air quality, biological resources, cultural resources, hydrology/water quality, land use and planning, noise, population/growth inducement, and utilities and service systems. VVWRA will serve as the Lead Agency for this document based on its responsibility for review and decision regarding the funding required before the project can proceed to be developed.

This transmittal constitutes a Notice of Preparation (NOP) for the proposed project EIR and serves as a request for environmental information that you or your organization believe should be included or addressed in the proposed environmental document. A detailed Initial Study with substantiation is attached for review to assist you in providing comments on the scope of the EIR. In addition to any general comments, please be sure to address the scope and content of environmental information or issues that relate to your agency's statutory responsibilities in connection with the proposed project. Four scoping meetings will be held in the communities of Hesperia and Apple Valley. The two scoping meetings in the City of Hesperia will be held on June 22 and 24, 2010 from 6:30 p.m. to 7:30 p.m. These meetings will be held at the VVWRA Board Room at 15776 Main Street, Hesperia. The two scoping meetings in the Town of Apple Valley will be held on June 15 and 17, 2010 from 6:30 p.m. to 7:30 p.m. These meetings will be held at the Vista Campana Middle School, adjacent to the Apple Valley Town Hall.

Comment Period: Based on the time limits defined by CEQA, your response should be sent at the earliest possible date, but no later than 30 days from receipt of this notice, which is June 28, 2010. All comments and any questions should be directed to:

Mr. Logan Olds, General Manager
Victor Valley Wastewater Reclamation Authority
15776 Main Street, Suite 3
Hesperia, CA 92345
Tel: (760) 948-9849
Fax: (760) 948-9897

Project Location(s): The proposed project components are located within the Town of Apple Valley and City of Hesperia in the County of San Bernardino. Figures in the attached Initial Study show the regional location of these cities and the project area and the location of specific facilities.

Town of Apple Valley WRP, Percolation Ponds and Pipeline Alignments

The proposed Town of Apple Valley WRP would be located on the north side of Otoe Road, just east of Quantico Road at an existing park site (Brewster Park) and related parking lot in the Town of Apple Valley at an elevation of approximately 2,909 feet above mean sea level. The WRP site is adjacent to the existing Otoe Road Lift Station, connecting to the existing sanitary sewer, which would be modified as part of the proposed project. There are two alternative locations for the percolation ponds. The percolation ponds in Alternative 1 would be located north of Waalew Road between Navajo Road (east of) and Carmel Lane. The Alternative 2 percolation pond location is proposed for a site north of Papago Road, east of Navajo Road, west of Temecula Road, centered just north of the intersection of Navajo Road and Carmel Road.

Figure 3 shows the site specific location of these three proposed WRP facilities on the USGS – Apple Valley North Quadrangle, 7.5 Minute Series topographic map. Figure 4 shows these locations on an aerial photo of the project area. The cadastral locations of these WRP facilities are: WRP, Section 4, SW1/4, T5N, R3W, San Bernardino Base Meridian (SBBM); Alternative 1 Percolation Site, Section 34, SW1/4, T6N, R3W, SBBM; and Alternative 2 Percolation Site, Section 34, NW1/4, T6N, R3W, SBBM.

Two potential effluent disposal (recycled water) pipeline alignments from the WRP site to the two percolation pond sites are shown on Figure 3. One pipeline route extends from the WRP into Otoe Road, west to Dale Evans Parkway, north on Dale Evans to Waalew Road; east to Navajo and north, first to the intersection of Navajo Road to Taos Road (Alternative Site 1, Percolation Basins) and then north on Navajo to Papago Road, and then east on Papago to its intersection with Carmel Lane where it will enter Alternative Site 2, Percolation Basins. The second pipeline route extends from the WRP into Otoe Road, east to Navajo, north on Navajo to Waalew Road. North of Waalew Road the Alternative 2 Percolation Basins site access alignment remains the same as described for the first pipeline alternative route. These two alternative routes are shown on Figures 3 and 4.

City of Hesperia WRP, Lift Station, Force Mains and Percolation Ponds

The City of Hesperia has proposed two alternative locations for its WRP. Alternative A is located west of Interstate Highway 15. The specific proposed location of the WRP is located north of Main Street, south of Yucca Terrace Drive, and west of Catawba Road, along a westward extension of Acacia Road. The cadastral location of this Alternative A WRP site is in Section 15, SE1/4, T4N, R5W SBBM, which can be located on the USGS – Baldy Mesa Quadrangle, 7.5 Minute Series topographic map. Figure 5 shows the Hesperia Alternative A location on a portion of the USGS – Baldy Mesa Quadrangle, 7.5 Minute Series topographic map and Figure 6 shows the WRP Alternative A location on an aerial photo of the area.

The lift station proposed to serve both WRP alternatives occupies the same location. The proposed location is shown on Figures 5, 6, and 7. A sewer main presently follows the alignment of Maple Avenue (See Figure 6). The proposed lift station site is located just west of Maple on the south side of Mojave Street, west of Tamarisk. The cadastral location of the proposed lift station is in Section 1 3, NW1/4, T4N, R5W, SBBM. A short gravity flow sewer would connect between the existing sewer main in Maple to the lift station site on Mojave, as shown on Figure 7.

The proposed project examined six alternative force main (pressure pipeline) alignments from the lift station to the Alternative A WRP location, which is approximately three miles southwest of the lift station. Refer to Figure 5. Of these six, the engineers recommended Alternative 1 (Carollo/HDR, Preliminary Design Report, City of Hesperia Lift Station and Force Main, page 6C-3) as the preferred alignment. This document examines the three highest ranked alternative force main alignments considered in the engineering study designed to connect to WRP A (FM Alternatives 1, 2 and 3) to the lift station. These pipeline alternatives range from a minimum of 15,300 feet in length to 18,200 feet in length. Table 1 summarizes these three alternative force main alignments that are proposed to connect to the WRP A location. These three alternative force main routes are located within Sections 13, 14 and 15, T4N, R5W, SBBM as shown on Figure 4.

The City of Hesperia WRP B site is proposed to be located on the north side of Mojave Street, just west of Tamarisk Avenue approximately one half mile west of Maple Avenue in the City of Hesperia at an elevation of approximately 3343 feet above mean sea level. Figure 7 shows the proposed WRP B site on an aerial photograph and Figure 8 shows the location on a portion of the USGS – Hesperia Quadrangle, 7.5 Minute Series topographic map. The cadastral location of the WRP B site is Section 12, SE1/4, T4N, R5W, SBBM.

As noted above, a gravity sewer will connect the existing sewer main beneath Maple Avenue, at the intersection of Maple and Mojave, to the lift station. In order to connect the lift station to the proposed WRP B Alternative site a short segment of force main will be installed beneath Mojave Street over a distance of about 1,500 feet. The gravity sewer alignment, lift station, wastewater force main and the WRP B site are all shown on Figure 7.

The final component of the Hesperia WRP facilities is a recycled water force main that would deliver recycled water from the WRP alternative sites to the percolation basin. Figure 9 shows the location of this proposed recycled water force main alignment. The force main would extend as follows: from the WRP east along Mojave Street to Tamarisk Avenue; south along Tamarisk to Willow Street; east along Willow to 3rd Avenue; east along Mesa Street to Santa Fe Avenue; and finally, northeast along Santa Fe Avenue to the proposed percolation basin site which is located at the northwest corner of the intersection of Manzanita Street and I Avenue and Manzanita Street and Osbrink Drive. This alignment is shown on Figure 9. To connect to the WRP-A the force main would extend west from the intersection of Tamarisk and Willow along the Live Oak Street alignment to Amargosa Road; then west along Amargosa to Cataba Road; and finally, north along Cataba to Acacia where the force main will turn west into the WRP A site. It is possible that onsite percolation basins may be installed at the WRP A site. No layout of basins has been identified for this site, but the site specific investigations evaluated an area sufficient to include such basins.

The purpose of this Notice of Preparation and attached project description and Initial Study, which contains a discussion of probable environmental effects, is for use in focusing your or your agencies comments for consideration in the EIR.

Purpose of the Notice of Preparation: The purpose of this NOP is to fulfill legal notification requirements, and inform the public and CEQA Responsible and Trustee Agencies that an EIR will be prepared, in this case a project specific EIR. This NOP solicits agency and interested party concerns regarding the potential environmental effects of implementing the proposed infrastructure improvement project at the project location. CEQA encourages early consultation with private persons and organizations that may have information or may be concerned with any potential adverse environmental effects related to physical changes in the environment that may be caused by implementing the project. Responses to the NOP that specifically focus on potentially significant environmental issues are of particular interest to VVWRA.

All written responses to this NOP will be included in the appendices to the EIR. The content of the responses will help guide the focus and scope of the EIR in accordance with State CEQA Guidelines.

Please refer to the detailed project description included as part of the Initial Study for this proposed project. Each element of this project is outlined in detail and graphics are attached to the Initial Study to assist the reviewer in understanding the potential project and related impacts addressed in the Environmental Checklist Form.

Thank you in advance for any comments you may submit in response to this NOP. For agencies, please include the name of a contact person in your agency if you submit comments. If you have any questions, please contact Mr. Logan Olds at (760) 948-9849.

Logan Olds
Attachment

Notice of Completion & Environmental Document Transmittal

Mail to: State Clearinghouse, P.O. Box 3044, Sacramento, CA 95812-3044 (916) 445-0613
For Hand Delivery/Street Address: 1400 Tenth Street, Sacramento, CA 95814 — 916/445-0613

SCH #_____

Project Title: Victor Valley Wastewater Reclamation Authority (VVWRA): Town of Apple Valley Wastewater Reclamation Plant, City of Hesperia Wastewater Reclamation Plant, and Related Facilities

Lead Agency VVWRA — Contact Person Logan Olds, General Manager
Mailing Address 15776 Main Street, Suite 3 — Phone (760) 948-9849
City Hesperia — Zip 92345 — County San Bernardino County

Project Location: County San Bernardino County — City/Nearest Community Town of Apple Valley and City of Hesperia
Cross Streets Bear Valley Road / Hesperia Road / I-15 — Zip Code 92345
Lat. / Long. 34° 28' 15" N / 117° 15' 25" W, (center or project area) — Total Acres approx. 60 acres
Assessor's Parcel No N/A — Section many — Twp 4, 5, 6 N — Range 3, 4, W — Base SBM
Within 2 miles: State Hwy # I-15 — Waterways Mojave River
Airports Apple Valley Airport — Railways BNSF Railway Company — Schools several

Document Type:

CEQA: ■ NOP ☐ Early Cons ☐ Neg Dec ☐ Mit Neg Dec
☐ Draft EIR ☐ Supplement/Subsequent EIR (Prior SCH No.) _____ ☐ Other _____
NEPA: ☐ NOI ☐ EA ☐ Draft EIS ☐ FONSI
Other: ☐ Joint Document ☐ Final Document ☐ Other _____

Local Action Type:

☐ General Plan Update ☐ General Plan Amendment ☐ General Plan Element ☐ Community Plan
☐ Specific Plan ☐ Master Plan ☐ Planned Unit Development ☐ Site Plan
☐ Rezone ☐ Prezone ☐ Use Permit ☐ Land Division (Subdivision, etc.)
☐ Annexation ☐ Redevelopment ☐ Coastal Permit ■ Other Wastewater and Recycled Water Project

Development Type:

☐ Residential: Units _____ Acres _____
☐ Office: *Sq.ft.* _____ *Acres* _____ *Employees* _____
☐ Commercial: *Sq.ft.* _____ *Acres* _____ *Employees* _____
☐ Industrial: *Sq.ft.* _____ *Acres* _____ *Employees* _____
☐ Education _____
☐ Recreational _____
☐ Water Facilities: *Type* _____ *MGD* _____
☐ Transportation: *Type* _____
☐ Mining: *Mineral* _____
☐ Power: *Type* _____ *Watts* _____
■ Waste Treatment: *Type* recycled *MGD* up to 4
☐ Hazardous Waste: *Type* _____
☐ Other: _____

Project Issues Discussed in Document:

■ Aesthetics / Visual
■ Agricultural Land
■ Air Quality
■ Archaeological / Historical
■ Biological Resources
☐ Coastal Zone
■ Drainage / Absorption
☐ Economic / Jobs
☐ Other _____
☐ Fiscal
■ Floodplain / Flooding
■ Forest Land / Fire Hazard
■ Geologic / Seismic
■ Minerals
■ Noise
■ Population / Housing Balance
■ Public Services / Facilities
■ Recreation / Parks
☐ Schools / Universities
☐ Septic Systems
☐ Sewer Capacity
■ Soil Erosion / Compaction / Grading
☐ Solid Waste
■ Toxic / Hazards
■ Traffic / Circulation
■ Vegetation
■ Water Quality
■ Water Supply / Groundwater
■ Wetland/Riparian
■ Wildlife
■ Growth Inducing
☐ Land Use
☐ Cumulative Effects

Present Land Use / Zoning / General Plan Designation: N/A

Project Description: The Victor Valley Wastewater Reclamation Authority (VVWRA) will serve as the Lead Agency under the California Environmental Quality Act (CEQA) and will coordinate the preparation of an Environmental Impact Report (EIR) that will evaluate the potential significant environmental impacts that may result from constructing and operating two subregional wastewater reclamation facilities: Town of Apple Valley Wastewater Reclamation Plant, City of Hesperia Wastewater Reclamation Plant (WRP), and Related Facilities. The wastewater would be treated to meet Title 22 standards and the recycled water produced from the two proposed WRPs could be used for landscape irrigation, industrial operations and recharge to the regional aquifer in the Alto Subbasin of the Mojave River Basin. Public scoping meetings are scheduled as follows: Apple Valley, June 15 and 17, 2010 at Vista Campana Middle School, adjacent to the Town Hall; and Hesperia June 22 and 24, 2010 at the VVWRA Board Room, 15776 Main Street, Hesperia. Meetings are scheduled from 6:30 p.m. to 7:30 p.m. at all locations.

Reviewing Agencies Checklist

Lead Agencies may recommend State Clearinghouse distribution by marking agencies below with an "X".
If you have already sent your document to the agency please denote that with an "S".

X	Air Resources Board	X	Office of Historic Preservation
	Boating / Waterways, Department of		Office of Public School Construction
	California Highway Patrol		Parks & Recreation
X	Caltrans District # 8		Pesticide Regulation, Department of
	Caltrans Division of Aeronautics		Public Utilities Commission
	Caltrans Planning (Headquarters)		Reclamation Board
	Coachella Valley Mountain Conservancy	X	Regional WQCB, # 6
	Coastal Commission		Resources Agency
	Colorado River Board		S.F. Bay Conservation & Development Commission
	Conservation, Department of		San Gabriel & Lower L.A. Rivers & Mtns Conservancy
	Corrections, Department of		San Joaquin River Conservancy
	Delta Protection Commission		Santa Monica Mountains Conservancy
	Education, Department of		State Lands Commission
	Energy Commission		SWRCB: Clean Water Grants
X	Fish & Game, Region # 6	X	SWRCB: Water Quality
	Food & Agriculture, Department of	X	SWRCB: Water Rights
	Forestry & Fire Protection		Tahoe Regional Planning Agency
	General Services, Department of		Toxic Substances Control, Department of
X	Health Services, Department of	X	Water Resources, Department of
	Housing & Community Development		
	Integrated Waste Management Board		Other
X	Native American Heritage Commission		Other
	Office of Emergency Services		

Local Public Review Period (to be filled in by lead agency)

Starting Date May 27, 2010 Ending Date June 28, 2010

Lead Agency (complete if applicable)

Consulting Firm:	Tom Dodson & Associates	Applicant:	Victor Valley Wastewater Reclamation Authority
Address:	2150 N. Arrowhead Avenue	Address:	15776 Main Street, Suite 3
City/State/Zip:	San Bernardino, CA 92405	City/State/Zip:	Hesperia, CA 92345
Contact:	Tom Dodson	Contact:	Logan Olds, General Manager
Phone:	(909) 882-3612	Phone:	(760) 948-9849

Signature of Lead Agency Representative:

Logan Olds Date: 24 May 2010

Authority cited: Section 21083, Public Resources Code. Reference: Section 21161, Public Resources Code.

INITIAL STUDY
FOR
VICTOR VALLEY WASTEWATER RECLAMATION AUTHORITY, TOWN OF APPLE VALLEY WRP, CITY OF HESPERIA WRP, AND RELATED FACILITIES

Project Proponent and CEQA Lead Agency:
Victor Valley Wastewater Reclamation Authority
15776 Main Street, Suite 3
Hesperia, California 92345
(760) 948-9849

Preparer:
Tom Dodson & Associates
2150 North Arrowhead Avenue
San Bernardino, California 92405
(909) 882-3612

May 2010

REVIEW PERIOD: 5/27/10 through 6/28/10

TABLE OF CONTENTS

Chapter 1 – PURPOSE AND NEED 1

1.1 Introduction 1
1.2 Purpose and Need 2

Chapter 2 – PROPOSED ACTION, INCLUDING ALTERNATIVES 3

2.1 Proposed Action Summary 3
2.1.1 Location 3
2.1.2 Project Characteristics 5
2.2 Other Agency Participation 21

Chapter 3– CEQA CHECKLIST FORM 24

Chapter 4– SUMMARY OF MITIGATION MEASURES 54

Chapter 5– PREPARERS 56

Chapter 6– REFERENCES 57

LIST OF TABLES

Table 1 Summary of Alternatives Hesperia Lift Station and Force Mains Design Information Memoranda VVWRA 4

Table 2 Apple Valley WRP Design Influent Wastewater Quality Characteristics 8

Table 3 Anticipated Effluent Discharge Limitations and Recommended Effluent Design Criteria for the Town of Apple Valley WRP 9

Table 4 Design Influent Wastewater Quality Characteristics 14

Table 5 Anticipated Effluent Discharge Limitations and Recommended Effluent Design Criteria for the City of Hesperia WRP 15

LIST OF FIGURES

Figure 1 Regional Location

Figure 2 VVWRA Service Boundary

Figure 3 Apple Valley WRP Facilities

Figure 4 Apple Valley Water Reclamation Plant Percolation Ponds Site – Alternatives 1 & 2

Figure 5 Hesperia Lift Station and Force Main Alignment Alternatives

Figure 6 Alternative A – WRP West of Interstate Highway 15

Figure 7 Lift Station Location Map

Figure 8 Hesperia WRP Facility Sites

Figure 9 Overall Site Plan

Figure 10 Eastside Regional WTTP Vicinity Map

Figure 11 Eastside Regional WRP Potential Area

Figure 12 Site Layout

Figure 13 Process Flow Diagram

Figure 14 Conceptual Architectural Elevations

Figure 15 Site Layout

Figure 16 Process Flow Diagram

Figure 17 Lift Station Site Plan

Figure 18 Hesperia Lift Station – Section 2

APPENDICES

Appendix 1 – PDR Apple Valley WRP
Appendix 2 – PDR Hesperia WRP
Appendix 3 – PDR Hesperia Lift Station and Force Main

LIST OF ABBREVIATIONS AND ACRONYMS

AAQS	Ambient air quality standards
ADA	Americans with Disabilities Act
ADT	average daily traffic
APE	area of potential effect
AQAP	Air Quality Attainment Plan
AQMP	Air Quality Management Plan
ARPA	Archaeological Resources Protection Act
bgs	below the ground surface
BMPs	Best Management Practices
BNR	biological nutrient removal
BOD	biochemical oxygen demand
BOR	U.S. Bureau of Reclamation
CAA	Clean Air Act
Cal-EPA	California Environmental Protection Agency
Cal/OSHA	California Department of Industrial Relations, Division of Occupational Safety and Health Administration
CARB	California Air Resources Board
CCAA	California Clean Air Act
CCAR	California Climate Action Registry
CDFG	California Department of Fish and Game
CEQA	California Environmental Quality Act
CHP	California Highway Patrol
CMP	Congestion Management Plan
CNEL	Community Noise Equivalent Level
Corps	U.S. Army Corps of Engineers
DOT	U.S. Department of Transportation
DTSC	Department of Toxic Substances Control
EIR	Environmental Impact Report
EIS	Environmental Impact Statement
EO 11990	Executive Order for the Protection of Wetlands
EPA	U.S. Environmental Protection Agency
FEMA	Federal Emergency Management Agency
FHWA	Federal Highway Administration
FONSI	Finding of No Significant Impact
FTA	Federal Transit Administration
GHG	greenhouse gas
gpd	gallons per day
HA	Hydrological Area
HAPs	hazardous air pollutants
HU	Hydrologic Unit

HUD	Department of Housing and Urban Development
HWCL	Hazardous Waste Control Law
IND	industrial
IS/EA	Initial Study/Environmental Assessment
MBR	Membrane Bioreactors
MCC	Motor Control Center
MCLs	maximum contaminant levels
MGD	million gallons per day
mg/L	milligrams per liter
MSDS	material safety data sheets
MUN	municipal
NAAQS	National Ambient Air Quality Standards
NAC	Noise Abatement Criteria
NAGPRA	Native American Graves Protection and Repatriation Act
NDMA	N-Nitrosodimethylamine
NEPA	National Environmental Policy Act
NESHAPs	National Emission Standards for Hazardous Air Pollutants
NHPA	National Historic Preservation Act
NIH	National Institutes of Health
NOI	Notice of Intent
NPDES	National Pollutant Discharge Elimination System
NRC	Nuclear Regulatory Commission
OES	Office of Emergency Services
OSHA	Occupational Safety and Health Administration
PCE	passenger car equivalent
PCPP	personal care products and pharmaceuticals
PDR	Preliminary Design Report
POTW	publicly owned treatment works
RAS	return activated sludge
RCPG	Regional Comprehensive Plan and Guide
RCRA	Resource Conservation and Recovery Act
RO	reverse osmosis
ROG	reactive organic gas
RWQCB	Regional Water Quality Control Board (or Regional Board)
SCAG	Southern California Association of Government
SCAQMD	South Coast Air Quality Management District
SCE	Southern California Edison
SDWA	Safe Drinking Water Act
SIP	State Implementation Plan
SoCAB	South Coast Air Basin
SR	State Route

SRT	Sludge Retention Time
SSA	Sole Source Aquifer
SWP	State Water Project
SWPPP	Storm Water Pollution Prevention Plan
SWRCB	State Water Resources Control Board
TACs	toxic air contaminants
TDS	Total Dissolved Solids
TIN	total inorganic nitrogen
TPY	tons of pollutants per year
TSS	Total Suspended Solids
UBC	Uniform Building Code
USFWS	U.S. Fish and Wildlife Service
USGS	U.S. Geological Survey
UV	Ultraviolet Disinfection
VOC	volatile organic compound
WAS	waste activated sludge
WDR	waste discharge requirements
WRP	water reclamation plant
WQMP	Water Quality Management Program

Chapter 1 PURPOSE AND NEED

1.1 INTRODUCTION

The Victor Valley Wastewater Reclamation Authority ("Authority" or VVWRA) was formed in 1977 to help meet the requirements of the federal Clean Water Act and provide wastewater treatment for the Victor Valley, including the cities of Victorville and Hesperia (and Adelanto at that time), the Town of Apple Valley and the surrounding unincorporated areas. Figure 1 shows the location of the Authority within southern California and Figure 2 shows the Authority's service area boundary. The VVWRA is a joint powers authority and public agency of the State of California. Member Agencies include the Town of Apple Valley, including the Apple Valley Rancho Water District, the City of Hesperia, including the Hesperia Water District, the County of San Bernardino, and the City of Victorville.

The original wastewater treatment plant (now termed the Westside Water Reclamation Plant), with associated infrastructure, began operating in 1981, providing tertiary level treatment for up to 4.5 million gallons per day (MGD) average flow. VVWRA currently treats an average flow of approximately 12 MGD of wastewater generated by the communities of Hesperia, Victorville, Apple Valley, Oro Grande and Spring Valley Lake. The Westside Water Reclamation Plant (WRP) treats a portion of the flow to a tertiary level and the remaining flow to a secondary level. A majority of the tertiary treated wastewater effluent is discharged to the Mojave River (adjacent to the WRP) and a smaller amount is currently used as recycled water to irrigate landscaping at the treatment plant and the nearby Westwinds Golf Course.

The Authority in collaboration with its member agencies, the City of Hesperia and the Town of Apple Valley, developed a strategic goal of locating subregional Wastewater Reclamation Plants to augment reclaimed water treatment and reuse capabilities of the Authority's overall wastewater management system. The proposed subregional facilities would be located in Hesperia and Apple Valley. The proposed project consists of installing and operating two WRPs (initially 1 MGD average flow expandable in the future to 4 MGD) and related infrastructure. Related infrastructure includes a gravity sewer, a lift station and force mains for the Hesperia WRP and modifications to an existing lift station to support the Apple Valley WRP. Recycled water lines connecting to proposed percolation ponds and direct recycled water uses are also proposed as part of the overall project.

Grant funding is being sought from the U.S. Bureau of Reclamation (BOR) to partially fund the construction of the proposed facilities to meet this project's objective of providing reclaimed water within both communities to offset demand for potable water. The proposed WRPs would be installed as Phase 1 and Phase 2 wastewater reclamation facilities designed for an initial 1.0 MGD of mechanical treatment capacity, with the ability to install additional mechanical elements to treat an additional 1 MGD without additional construction. Phase 2 would consist of subsequent expansion to 4.0 MGD treatment capacity at each WRP location. The WRPs would operate as scalping plants taking wastewater from the existing wastewater collection system located in the immediate vicinity of the two proposed WRPs and treating it to Title 22 standards for use as recycled water. The proposed project also includes recycled water lines to serve potential recycled water users and that can deliver excess recycled water to percolation basins for effluent disposal and percolation into the Mojave River's Alto Groundwater Subbasin. These improvements are essential to protect and enhance water supply, water quality and water reuse within the VVWRA's service area.

1.2 PURPOSE AND NEED

The proposed project has five general objectives:

1. Construct wastewater reclamation plants at locations that facilitate an increase in the use of recycled water near end users.

2. Treat wastewater to produce effluent meeting the most stringent Title 22 Recycled Water criteria.

3. Provide the core infrastructure for expansion of the collection, treatment and disposal system as needed either to protect groundwater, or to accommodate growth in the Authority's service area.

4. Maximize the total water supply available to the community.

5. Minimize any adverse economic and environmental impacts to the community.

In addition to these general objectives, specific objectives for the proposed facilities are as follows:

a. Provide sufficient wastewater treatment capacity to ensure continuous compliance with anticipated regulatory requirements.

b. Provide additional treatment capacity in the upper reaches of the service area to alleviate flows in downstream interceptors

c. Provide for future expansion of services.

The installation of the proposed components of the WRP and associated system infrastructure is considered essential to the Authority in order to continue meeting the public health and safety requirements for wastewater treatment and water supply within its service area and to meet Lahontan Regional Water Quality Control Board (Regional Board or RWQCB) water quality objectives.

Chapter 2 PROPOSED ACTION

2.1 PROPOSED ACTION SUMMARY

As previously described this project consists of the construction and installation of the following components: a 1.0 MGD average flow Water Reclamation Plant in the Town of Apple Valley expandable to a 4.0 MGD Plant; a 1.0 MGD average flow Water Reclamation Plant in the City of Hesperia expandable to a 4.0 MGD Plant (the expansion would occur in the future when demand justifies such expansion at both WRPs); a lift station and force main to serve the proposed Hesperia WRP; modification of a lift station to serve the proposed Apple Valley WRP; and recycled water disposal infrastructure and percolation ponds to serve each WRP. The wastewater will be treated to meet the most restrictive Title 22 recycled water requirements and will be used for industrial and landscape irrigation with excess recycled water disposed of in percolation ponds. This Initial Study (IS) evaluates the potential effects on the environment from constructing these new facilities and the Authority's subsequent wastewater system operations.

2.1.1 Location

The proposed project components are located within the Town of Apple Valley and City of Hesperia in the County of San Bernardino. Figure 1 shows the regional location of these cities and the project area.

2.1.1.1 Town of Apple Valley WRP, Percolation Ponds and Pipeline Alignments

The proposed Town of Apple Valley WRP would be located on the north side of Otoe Road, just east of Quantico Road at the southwest corner of Brewster Park in the Town of Apple Valley at an elevation of approximately 2,909 feet above mean sea level. The WRP site is adjacent to the existing Otoe Road Lift Station, connecting to the existing sanitary sewer, which would be modified as part of the proposed project. There are two alternative locations for the percolation ponds. The percolation ponds in Alternative 1 would be located north of Waalew Road between Navajo Road (east of) and Carmel Lane (Road?). The Alternative 2 percolation pond location is proposed for a site north of Papago Road, east of Navajo Road, west of Temecula Road, centered just north of the intersection of Navajo Road and Carmel Road.

Figure 3 shows the site specific location of these three proposed WRP facilities on the USGS – Apple Valley North Quadrangle, 7.5 Minute Series topographic map. Figure 4 shows these locations on an aerial photo of the project area. The cadastral locations of these WRP facilities are: WRP, Section 4, SW1/4, T5N, R3W, San Bernardino Base Meridian (SBBM); Alternative 1 Percolation Site, Section 34, SW1/4, T6N, R3W, SBBM; and Alternative 2 Percolation Site, Section 34, NW1/4, T6N, R3W, SBBM.

Two potential effluent disposal (recycled water) pipeline alignments from the WRP site to the two percolation pond sites are shown on Figure 3. One pipeline route extends from the WRP into Otoe Road, west to Dale Evans Parkway, north on Dale Evans to Waalew Road; east to Navajo and north, first to the intersection of Navajo Road to Taos Road (Alternative Site 1, Percolation Basins) and then north on Navajo to Papago Road, and then east on Papago to its intersection with Carmel Lane where it will enter Alternative Site 2, Percolation Basins. The second pipeline route extends from the WRP into Otoe Road, east to Navajo, north on Navajo to Waalew Road. North of Waalew

Road the Alternative 2 Percolation Basins site access alignment remains the same as described for the first pipeline alternative route. These two alternative routes are shown on Figures 3 and 4.

2.1.1.2 City of Hesperia WRP, Lift Station, Force Mains and Percolation Ponds

The City of Hesperia has proposed two alternative locations for its WRP. Alternative A is located west of Interstate Highway 15. The specific proposed location of the WRP is located north of Main Street, south of Yucca Terrace Drive, and west of Catawba Road, along a westward extension of Acacia Road. The cadastral location of this Alternative A WRP site is in Section 15, SE1/4, T4N, R5W SBBM, which can be located on the USGS – Baldy Mesa Quadrangle, 7.5 Minute Series topographic map. Figure 5 shows the Hesperia Alternative A location on a portion of the USGS – Baldy Mesa Quadrangle, 7.5 Minute Series topographic map and Figure 6 shows the WRP Alternative A location on an aerial photo of the area.

The lift station proposed to serve both WRP alternatives occupies the same location. The proposed location is shown on Figures 5, 6, and 7. A sewer main presently follows the alignment of Maple Avenue (See Figure 6). The proposed lift station site is located just west of Maple on the south side of Mojave Street, west of Tamarisk. The cadastral location of the proposed lift station is in Section 13, NW1/4, T4N, R5W, SBBM. A short gravity flow sewer would connect the existing sewer main in Maple to the lift station site on Mojave, as shown on Figure 7.

The proposed project examined six alternative force main (pressure pipeline) alignments from the lift station to the Alternative A WRP location, which is approximately three miles southwest of the lift station. Refer to Figure 5. Of these six, the engineers recommended Alternative 1 (Carollo/HDR, Preliminary Design Report, City of Hesperia Lift Station and Force Main, page 6C-3) as the preferred alignment. This document examines the three highest ranked alternative force main alignments considered in the engineering study designed to connect to WRP A (FM Alternatives 1, 2 and 3) to the lift station. These pipeline alternatives range from a minimum of 15,300 feet in length to 18,200 feet in length. Table 1 summarizes these three alternative force main alignments that are proposed to connect to the WRP A location. These three alternative force main routes are located within Sections 13, 14 and 15, T4N, R5W, SBBM as shown on Figure 4.

Table 1
SUMMARY OF ALTERNATIVES HESPERIA LIFT STATION AND FORCE MAINS
DESIGN INFORMATION MEMORANDA VICTOR VALLEY WASTEWATER RECLAMATION AUTHORITY

Description of Characteristics	FM Alternative 1	FM Alternative 2	FM Alternative 3
Force Main Length	15,300	18,200	15,600
Casing Pipe Length			
I-15	350 feet	350 feet	350 feet
Aqueduct	500 feet	900 feet	500 feet
Trenchless Technology Method			
I-15	Jack & Bore	Jack & Bore	Jack & Bore
Aqueduct	Jack & Bore	Directional Drilling	Jack & Bore / Direction Drilling
Right-of-Way Acquisition Requirements	High	Low	High
Estimated Construction Cost	$3,800,000	$4,700,000	$4,100,000

The City of Hesperia WRP B site is proposed to be located on the north side of Mojave Street, just west of Tamarisk Avenue approximately one half mile west of Maple Avenue in the City of Hesperia

at an elevation of approximately 3343 feet above mean sea level. Figure 7 shows the proposed WRP B site on an aerial photograph and Figure 8 shows the location on a portion of the USGS – Hesperia Quadrangle, 7.5 Minute Series topographic map. The cadastral location of the WRP B site is Section 12, SE1/4, T4N, R5W, SBBM.

As noted above, a gravity sewer will connect the existing sewer main in Maple Avenue, at the intersection of Maple and Mojave, to the lift station. In order to connect the lift station to the proposed WRP B Alternative site a short segment of force main will be installed in Mojave Street over a distance of about 1,500 feet. The gravity sewer alignment, lift station, wastewater force main and the WRP B site are all shown on Figure 7. In addition, the project would include a force main between the WRP and a manhole located at the intersection of Maple Avenue and Mauna Loa Street to return to the collection system the waste activated sludge generated by the treatment process.

The final component of the Hesperia WRP facilities is a recycled water force main would deliver recycled water from the WRP alternative sites to the percolation basin. Figure 9 shows the location of this proposed recycled water force main alignment. The force main would extend as follows: from the WRP east along Mojave Street to Tamarisk Avenue; south along Tamarisk to Willow Street; east along Willow to 3rd Avenue; east along Mesa Street to Santa Fe Avenue; and finally, northeast along Santa Fe Avenue to the proposed percolation basin site which is located at the northwest corner of the intersection of Manzanita Street and I Avenue and Manzanita Street and Osbrink Drive. This alignment is shown on Figure 9. To connect to the WRP-A the force main would extend west from the intersection of Tamarisk and Willow along the Live Oak Street alignment to Amargosa Road; then west along Amargosa to Cataba Road; and finally, north along Cataba to Acacia where the force main will turn west into the WRP A site. It is possible that onsite percolation basins may be installed at the WRP A site. No layout of basins has been identified for this site, but the site specific investigations evaluated an area sufficient to include such basins.

2.1.1.3 Eastside WRP Site

In addition to the Town of Apple Valley and City of Hesperia wastewater reclamation plants, VVWRA is interested in examining the environmental constraints at a third WRP site designated as the Eastside Regional WRP site. No specific facilities are proposed for this WRP site at this time, but it is considered by VVWRA to be an ideal location for a future WRP that would utilize wastewater flows from the interceptor sewer that presently serves the area along Interstate 15 (I-15) from the I-15/Stoddard Wells Road interchange to Dale Evans Parkway. Figure 10 is an aerial photograph of the Eastside WRP site (identified as the Eastside Regional WWTP Potential Site Area) and surrounding vicinity. The Eastside WRP site encompasses an area located between the Mojave River on the west, I-15 on the south, Stoddard Wells Road on the east and north, Dante Street on the north and the Mojave Northern Railroad track alignment on the northwest. Figure 11 encompasses a portion of the USGS – Victorville and Apple Valley Quadrangles, 7.5 Minute Series topographic maps. The cadastral location of the proposed Eastside WRP site area consists portions of Sections 3 and 4, T5N, R4W, SBBM and Sections 33 and 34, T6N, R4W, SBBM, as shown on Figure 11.

2.1.2 Project Characteristics

VVWRA envisions the facilities described in Section 2.1.1 as part of a recycled water program. This program is anticipated to be implemented over an extended period of up to 10 years. As funding becomes available during this period the Town of Apple Valley and the City of Hesperia WRPs will be installed and begin operation with 1 MGD average flow of tertiary treatment capability. The

recycled water will be utilized for landscape irrigation and industrial applications, and excess recycled water would be delivered to percolation ponds for recharge (percolation and possible future aquifer storage and recovery (ASR) wells) to the regional groundwater aquifer. As part of this overall recycled water program, a future WRP is envisioned to be installed at the Eastside WRP site with the same initial capacity. As additional wastewater is generated and additional recycled water users are identified in the future, these WRPs may have their treatment capacity expanded in phases up to a maximum of 4 MGD average flow as currently envisioned. Expansion beyond this capacity is not anticipated or evaluated in this document.

This environmental document evaluates a mix of an overall recycled water program, particularly cumulative impacts, and site specific facilities based on facility designs prepared by the two consulting engineering firms that collaborated on the design for the Apple Valley and Hesperia WRPs. These two firms are Carollo Engineers and HDR Engineering, Inc. The engineers have compiled the following Preliminary Design Reports "Town of Apple Valley WRP" (December 2009); "City of Hesperia WRP" (December 2009); and "City of Hesperia Lift Station and Force Main" (December 2009). The information regarding site specific facilities is abstracted and summarized from these three documents. For reviewers interested in more engineering design detail, the reviewer is referred to the Technical Appendices where these three Preliminary Design Reports (PDRs) are presented in full as Appendix 1, 2 and 3.

In summary, the following specific facilities will be evaluated in this document (as outlined in Section 2.1.1 of this document):

1. <u>Town of Apple Valley</u>
    a. Wastewater Reclamation Plant (WRP)
    b. A pipeline connection between the proposed WRP and the existing Otoe Road Lift Station (source of wastewater to be treated)
    c. A recycled water pipeline to deliver recycled water to one of two percolation basin sites where recycled water can be recharged to the regional groundwater aquifer
    d. Two alternative percolation pond sites, where excess recycled water can be disposed when recycled water production exceeds recycled water demand, should this occur.
    e. Use of between 1 and 4 MGD of recycled water within the Town of Apple Valley over the life of the proposed program.

2. <u>City of Hesperia</u>
    a. Wastewater Reclamation Plant (WRP, two possible locations) and Lift Station
    b. A gravity pipeline connection between the lift station and the existing sewer main (source of wastewater to be treated)
    c. A force main from the lift station to the WRP
    d. A recycled water pipeline (force main) to deliver recycled water to a percolation basin site where recycled water can be recharged to the regional groundwater aquifer
    e. One percolation pond site, where excess recycled water can be disposed when recycled water production exceeds recycled water demand, should this occur.
    f. Use of between 1 and 4 MGD of recycled water within the City of Hesperia over the life of the proposed program

3. <u>Eastside WRP</u>
    a. Environmental constraints analysis for the Eastside WRP Potential Site Area, no proposed facilities at this time.

The following text provides a summary discussion of each of the above facilities. As noted above, the detailed engineering assumptions and facility design requirements are provided in the Technical Appendices, Appendix 1, 2 and 3.

2.1.2.1 Town of Apple Valley Proposed Water Reclamation Facilities

The WRPs proposed are "scalping plants" in that they will take wastewater from the regional wastewater collection system at a constant daily rate (design capacity) and treat and reuse the recycled water locally for non-potable uses, or for discharge of the excess recycled water into local area percolation basins for recharge to the regional groundwater aquifer. The ultimate objective of both direct and indirect use of the recycled water generated from the proposed Apple Valley WRP is to offset demand for groundwater resources extracted from the regional aquifer. The wastewater remaining in the regional collection system will continue to flow to the VVWRA Westside WRP located in the northern portion of Victorville, east of the Southern California Logistics Airport (SCLA). For example, if flow in the sewage collection system (sewer main) near one of the proposed WRPs is 3.0 MGD average flow, in Phase 1 of the program the proposed WRP will take 1.0 MGD out of the system to treat and reuse and the remaining 2.0 MGD (plus solids from the WRP) would remain in the collection system and continue to flow to the regional treatment plant for treatment and reuse/discharge. The proposal adds capacity to the regional system as a whole, but also ensures a constant, known, supply of recycled water is available from the proposed WRP within the local area. Waste activated sludge resulting from the treatment process will be returned to the regional sewage collection system for delivery to and treatment at the regional Westside WRP.

Town of Apple Valley Water Reclamation Plant (WRP)

The WRP proposed for the Town of Apple Valley would have an initial treatment capacity of 1.0 MGD average flow and for the purposes of this evaluation, a build-out treatment capacity of 4.0 MGD. Additional capacity may be considered in the future, but will not be given further consideration in this document. Phased development of the WRP envisions the initial facility size as capable of processing 1.0 MGD of wastewater; a second phase, Phase 2, would expand the WRP to 2.0 MGD and a third phase of up to 4.0 MGD average flow. Implementation of the second and third phases would be dependent upon actual future growth in recycled water demand and regulatory considerations.

Site

As described under the project location discussion above, the Apple Valley WRP is proposed to be located at Brewster Park, along the southern boundary adjacent to Otoe Road. Figure 4 shows the site location and Figure 12 shows the proposed site layout for the WRP. The site is approximately 240' x 420' or about 100,800 square feet or about 2.3 acres in size.

Apple Valley Water Reclamation Plant Design Requirements

The PDR evaluated the design performance requirements for the proposed Apple Valley WRP and identified the preferred alternative design for the WRP and associated facilities. A copy of this document is provided as Appendix 1 of the Technical Appendices to this document. The following is a summary of the PDR findings and recommendations, drawing heavily on the text in the PDR.

Influent Loading Assumptions: As previously noted, the hydraulic capacity of the initial treatment plant will be 1.0 MGD average flow. However, the "waste load" of the plant is equally or more important to plant design, and waste load can be characterized by the pounds of Biochemical Oxygen Demand (BOD) in the influent flow, Total Suspended Solids (TSS) and Total Kjeldahl Nitrogen (TKN) in the influent flow. The pounds of waste loads or mass loading rates depend on

two factors: the hydraulic flow rate, which is defined initially as 1.0 MGD; and the waste concentrations of the flow. The design influent wastewater characteristics presented in the PDR are based on historical wastewater quality at the Apple Valley Metering Station, located at the point of discharge to the VVWRA interceptor going to the Westside WRP. Table 2 shows the influent water quality assumptions used in the PDR.

Table 2
APPLE VALLEY WRP DESIGN INFLUENT WASTEWATER QUALITY CHARACTERISTICS

Constituent	Unit	Annual Average[1]	Maximum Month[2]
Total BOD (Biological Oxygen Demand)	mg/L	276	414
Soluble BOD	mg/L	119	178
TSS (Total Suspended Solids)	mg/L	274	410
NH_4-N (Ammonia Nitrogen)	mg/L	29.1	37.9
TKN (Total Kjeldahl Nitrogen)	mg/L	43	55.9
Alkalinity[3]	mg/L	200	200
Temperature, Degree[3]	C	17	17
pH[3]	log [H+]	7.0	7.0

Notes:
1 Total BOD, TSS, and Ammonia Nitrogen values based on 2005-2009 historical data at the Apple Valley Metering Station. Ammonia to TKN ratio and soluble BOD fraction of total BOD are based on 2007 influent data at the VVWRA Westside WRP (Westside Water Reclamation Plant Phase III Design Summary, HDR, March 1998).
2 Maximum month peaking factors of 1.5 (BOD and TSS) (and 1.3 (TKN and NH4-N) based on 2007 influent data at the VVWRA Westside WRP.
3 Based on 2007 influent data at the VVWRA WRP, Westside Water Reclamation Plant Phase III Design Summary (HDR, March 1998).

Influent Peak Flows: The Apple Valley WRP has been designed as a scalping plant with a constant treatment flow. Therefore, hydraulic peaking factors have not been considered in the design of the WRP.

Influent Peak Mass Loadings: Like hydraulic peaking factors, influent mass loadings vary temporally (daily, weekly or monthly). The maximum anticipated constituent concentrations and peak loading factors used in the PDR are based on maximum month constituent concentrations shown in Table 2 and are 414 mg/L for BOD, 410 mg/L for TSS and 55.9 mg/L for TKN.

Assumed Treated Effluent Limitation: The treatment requirements, effluent limitations, will be established by the Regional Board through issuance of a Waste Discharge Requirements (WDR) permit. The WRP must be designed to meet these requirements, which are assumed to be established to minimize degradation of existing groundwater and surface water quality. Assumed and estimated treated effluent limits for the WRP design are shown on Table 3.

Table 3
ANTICIPATED EFFLUENT DISCHARGE LIMITATIONS AND RECOMMENDED EFFLUENT DESIGN CRITERIA FOR THE TOWN OF APPLE VALLEY WRP

Parameter	VVWRA RFP Attachment A Effluent Limit	Title 22 Water Recycling Criteria	Draft Regulation for Groundwater Recharge Reuse	Recommended Effluent Design Criteria
pH	6.5-8.5	--	--	6.5-8.5
BOD_5 (mg/L) Avg. Monthly Avg. Weekly Max Daily	 10 15 30	--	--	 10 15 30
TSS (mg/L) Avg. Monthly Avg. Weekly Max Daily	 10 15 30	--	--	 10 15 30
Total Nitrogen (mg/L)	--	--	5	8/4[1]
Turbidity (NTU) 24hr - 5% of time sample max. Any time max.	--	 0.2 0.5	--	 0.2 0.5
Total Coliform (CFU/100 ml) 7-day median 30-day one sample max. Single sample maximum	--	 2.2 23 240	--	 2.2 23 240

Note:
1 Biological process will be designed to treat to a goal of 8 mg/L, with the flexibility to meet future anticipated goal of 4 mg/L (80 percent of maximum limits of 10 and 5 mg/L, respectively).

These treated effluent values are assumed to minimize degradation of existing groundwater quality and optimize reuse potential.

Solids Handling and Disposal: The WRP will generate waste activated sludge (WAS) that will require disposal or reuse in accordance with existing state and federal regulations. The proposed scalping plant would not treat the WAS further. Instead, the WAS will be put back into the regional sewage collection system and treated at the regional Westside WRP.

WRP Onsite Facilities: The overall treatment process selected for the Apple Valley WRP is a Membrane Bioreactor approach to treating wastewater. The Apple Valley WRP will be comprised of the following:

- Influent lift station (minor modifications to existing Otoe Lift Station force main.
- Screening - 2 mm rotary drum screens
- Activated sludge process - biological process to meet a total nitrogen limit of 8 mg/L with flexibility to meet future nitrogen regulation limit of 5 mg/L, with a goal of 4 mg/L or less
- Membrane filtration - submerged hollow fiber membrane filtration system
- Ultraviolet disinfection - using low pressure high output closed vessel technology to reduce overall energy consumption
- Reclaimed water pump station -deliver water for off-site and on-site uses

- Waste activated sludge - Pumped to downstream section of adjacent collection system
- Headworks odor control - In ground non-proprietary biofilter for treatment of foul air from the screening area.

Figure 13 provides a schematic representation, Process Flow Diagram, for the above treatment process and Figure 12 shows a typical layout. The following text describes some of these essential facilities.

Primary Treatment

Headworks and Grit Chamber: The headworks removes large and stringy objects from the waste-water and removes heavy and abrasive particles (grit) for disposal into a dumpster and then the local landfill. The PDR recommends an internally fed rotating drum screen for the influent. The location of the headworks is shown on Figure 12. It encompasses an area of about 40 feet by 40 feet. Screenings from the rotary drum screens are discharged to a washer and compactor. The washer assists in control of odors from the screened materials, while the compactor decreases the volume of screenings for disposal. Screenings are transferred to a dumpster for transport to a disposal site.

Two 2-mm rotary drum screens (one on stand-by) are proposed with a capacity of 2 MGD per screen. Influent flows on the downstream side of the headworks will be discharged to one pipe. Pumps and piping, as required, will be used to internally move material at the headworks.

Coarse screening and grit removal are provided for as future expansion features if needed to supplement the fine screens.

Secondary and Tertiary Treatment

Secondary/Tertiary treatment at the WRP will consist of an activated sludge process for reduction of BOD and nutrient removal, coupled with a membrane bioreactor technology (MBR) for solids-liquids separation. Initially a four-stage Bardenpho process will be used for reduction of BOD and nutrient removal to meet a TN limit of 10 mg/L and a goal of 8 mg/L. The biological treatment basins can then be modified to accommodate a four-stage Bardenpho configuration to comply with a potential nutrient limit of 5mg/L N in the future if necessary.

The MBR process combines biological treatment with filtration to achieve secondary treatment plus advanced filtration. The MBR process replaces the function of secondary clarifiers and granular media (usually sand filters) or cloth disk filtration in the conventional wastewater treatment process.

Biological Treatment: The biological treatment process proposed provides, activated sludge treatment of physically screened raw wastewater. The two proposed biological treatment basins provide anoxic zones, aerobic zones (aerated), and swing zones (capability for both anoxic and aerobic treatment) for maximum removal of nutrients by microorganisms in various metabolic processes. Initial design will be for a 1.0 MGD flow with the ability to reduce Total Nitrogen to below 10 mg/L, with a goal of8 mg/L or less, the system designed for modification to a system in the future that would remove more nutrients if needed.

The biological treatment basins are configured as single-pass basins with internal baffles to separate the different zones and facilitate serpentine flow and minimize potential for back-mixing between adjacent zones.

Screened wastewater and returned activated sludge (from the MBR process) will be combined and equally distributed between the biological treatment basins. This mixed liquor will flow through a first anoxic zone, a swing zone, two aerobic zones, and a second swing zone. The swing zones can be operated as either an aerobic or anoxic zone depending on what is needed to remove nutrients in the wastewater. (There will also be a future pump and piping from the second aeration zone back to the anoxic zone if needed in order to achieve additional denitrification to remove more nutrients prior to filtration).

At the end of the swing zone, the mixed liquor will then flow into a wet well. Pumps will transfer the mixed liquor to the MBR basins. The return activated sludge from the MBR process will be overflow by gravity to the beginning of the biological treatment process.

The dimensions of the biological treatment process area are approximately 200 feet by 60 feet.

MBR: The purpose of the MBR process is to remove suspended solids in the mixed liquor from the biological treatment process and provide a high-quality filtrate that can be effectively disinfected with UV disinfection methods. Membranes are immersed in open tanks of aerated mixed liquor. The membranes are hollow fibers with fixed pore size to prevent suspended solids from passing through. (The suspended solids resulting from the MBR system are the return activated sludge). Permeate pumps create a partial vacuum in the membrane fibers driving flow from the biological treatment process to the inside of the membrane fibers, filtering the flow. Each bundle of fibers consists of 370 sq. ft. of membrane area. These bundles are grouped together and the number of total bundles needed is determined by plant flow requirements. Two MBR units are recommended for Phase 1 with the equivalent of one more train being needed for the second phase.

Scum and Waste Activated Sludge: The waste activated sludge and scum are removed on a regular basis at the end of the biological treatment process and just prior to the MBR system. They are discharged into the regional sewer collection system via the WAS pump station.

UV Disinfection: The UV Disinfection facility ensures an adequate dose of UV radiation to disinfect the treated effluent. It uses UV lamps to disinfect water. The process inactivates pathogens and other microorganisms, but does not leave a residual disinfecting effect in the recycled water, as chlorine does. Therefore, after primary disinfection with UV light, bulk sodium hypochlorite will be used to provide chlorine residual in the recycled water distribution system at the reclaimed water pump station. The performance standard for primary disinfection is a total coliform concentration of 2.2 MPN/100 ml maximum for the 7-day median; 1 instance per month of treated effluent exceeding 23 MPN/100 ml; and a single sample with a concentration of 240 MPN/100 ml.

The typical UV Disinfection system is an open channel, low pressure, high output system, with an automatic cleaning system for the UV lamps. However, the PDR recommends a close-channel UV system. The overall system consists of the inlet pipe from the MBR process, three UV treatment systems (with room for an additional system) and a pipe to the reclaimed water pump system. The UV treatment area is approximately 43 feet by 30 feet.

Reclaimed Water Pump Station: A reclaimed water pump station will be provided to convey the treated water for off-site and on-site recycled water uses. It will consist of a concrete clear well with vertical turbine pumps, a hydropneumatic tank to maintain plant water system pressure, a back pulse tank to store reclaimed water for membrane back pulsing, and a chlorine feed to the clear well to provide residual chlorination of the reclaimed water.

Odor Control: An In-ground biofilter will be installed for treating foul air in the screening room of the headworks.

Operations Building: An administrative, small process laboratory and bathroom facilities will be located within the WRP.

Backup Generator: An emergency backup diesel generator (approximately 350 kW) will be maintained on the property to ensure the facility can continue to operate in the event of a electrical power outage. This generator will be located on a concrete pad adjacent to the WRP structure and an 8-hour capacity above ground diesel fuel storage tank, with a leak collection containment system, will be installed adjacent to the generator.

WAS Return: WAS will be pumped from the proposed Apple Valley WRP into the existing Otoe Road Lift Station force main to allow conveyance to the downstream portion of the collection and ultimate treatment at the Westside WRP. A wet well will be installed to facilitate transfer of the WAS to the Otoe Road Lift Station.

Electrical Requirements and Control System: Estimated power supply requirements for the Apple Valley WRP are estimated to be 700 kW per day. The WRP will be constructed to receive power from the local utility (SCE) and distribute it through the plant. A 480 VAC line will connect underground to adjacent electricity distribution lines owned by Southern California Edison (SCE). As described above, there will be a back-up generator incorporated in the WRP to ensure the plant can operate in the event electricity is temporarily unavailable from SCE.

The instrumentation and control system will be designed to monitor and control the WRP. Allen Bradley Programmable Logic Controllers (PLCs) will be used for this function at the proposed WRP. The PLCs would communicate using Ethernet over a fiber optic backbone. Within a control room, the operators will interface with the system using the Wonderware Human Machine Interface (HMI). At key locations in the plant, an Industrial Personal Computer will be loaded with Wonderware screens, and would also serve as remote HMIs.

Recycled Water Lift Station: The WRP would include a recycled water lift station that will pump the recycled water to the proposed percolation basins. This facility will consist of a concrete clear well pump station, vertical turbine pumps, a hydropneumatic tank to maintain plant water system pressure, a back pulse tank to store reclaimed water for membrane back pulsing, and a chlorine feed system to provide the residual chlorination of the reclaimed water. Refer to Figure 12 for this facility's location.

WRP Offsite Facilities

There are two types of offsite facilities.

Recycled Water Pipeline Two alternative alignments have been identified to transport the recycled water to one of two alternative percolation basin locations. This force main will be up to 10" in diameter and it is assumed that it will be installed at a rate of 200 lineal feet of pipeline per day. The Alternative 1 recycled water force main pipeline distance to the Alternative 1 percolation basins is about 12,500 feet; and to the Alternative 2 percolation basins is about 16,500 feet. The Alternative 2 recycled water force main pipeline distance to the Alternative 1 percolation basins is about 11,000 feet; and to the Alternative 2 percolation basins is about 15,000 feet. Refer to Figures 3 and 4, which show the location of the two alternative pipeline alignments

Percolation Ponds: Percolation ponds of approximately 16 acres in area would be built on an approximately 20 acre site where percolation would occur. There are two potential sites where percolation ponds could be constructed. No preferred alternative site has been determined at this time. The ponds would be constructed by grading the basins, including use of as much excavated material as possible to form the basin berms. Any excess excavated material would be made available to local contractors to be used as fill material.

Site Design Concepts: The facility design envisions placement of the facilities within two major structures on the property. Figure 14 shows a conceptual design for the Apple Valley WRP. It includes a non-metallic roof; CMU split face facade; site security fencing; and screening through use of berms and landscaping. Structure colors would be consistent with City design requirements, such as desert tones with split face blocks, etc. Exterior lighting will be minimal for safety purposes and will be directed onto the WRP site. Sound attenuation for noise facility components will be provided, either directly on the equipment or through structural controls. The nearest residence is about 700 feet and park recreation activities will occur at a comparable distance from the facility. Noise attenuation at the WRP will conform with City noise requirements.

2.1.2.2 City of Hesperia Proposed Water Reclamation Facilities

The WRP proposed for the City of Hesperia would have an initial treatment capacity of 1.0 MGD average flow and a Phase 2 capacity of 4 MGD, which the potential build-out treatment capacity envisioned at this time. If approved, the 1.0 MGD capacity WRP would be installed in the near future. Implementation of the second and third phases would be dependent upon future growth in wastewater flows, recycled water demand and regulatory considerations. There are two proposed locations for the Hesperia WRP. Alternative A is located west of Interstate 15, as shown on Figures 5 and 6. The proposed Alternative B Hesperia WRP site is located east of Interstate 15 as shown on Figures 6 through 9. The proposal adds capacity to the regional system as a whole, but also ensures a constant, known, supply of recycled water is available from the proposed WRP within the local area. Waste activated sludge resulting from the treatment process will be returned to the regional sewage collection system for delivery to and treatment at the regional Westside WRP. The following analysis of WRP onsite facilities applies to both Alternative A and Alternative B.

Site
As described under the project location discussion above, two alternative locations are being considered for the Hesperia WRP. Alternative A is located in the vicinity of the intersection of Cataba Road and Acacia Road. Figure 5 and 6 show the site location and Figure 15 shows a typical WRP layout that would be installed at both locations. The site is approximately 240' x 420' or about 100,800 square feet or about 2.3 acres in size. Both the Alternative A site and Alternative B site contain more than five acres and the maximum area of disturbance on each site will about three acres.

Hesperia Water Reclamation Plant Design Requirements
The PDR evaluated the design performance requirements for the proposed Hesperia WRP and identified the preferred alternative design for the WRP and associated facilities. A copy of the two PDR documents for Hesperia is provided as Appendix 2 and Appendix 3 of the Technical Appendices to this document. The following is a summary of the PDR findings and recommendations, drawing heavily on the text in the PDR. Refer to the Technical Appendices if more detail is desired.

Influent Loading Assumptions: As previously noted, the hydraulic capacity of the initial treatment plant will be 1.0 MGD average flow. However, the “waste load” of the plant is equally or more

important to plant design, and waste load can be characterized by the pounds of biochemical oxygen demand (BOD) in the influent flow. The pounds of waste load, or mass loading rate depends on two factors: the hydraulic flow rate, which is defined initially as 2.0 MGD; and the waste concentration of the flow. The PDR assumes the influent wastewater quality will be similar to the quality of influent entering the Regional Westside WRP. Table shows the influent water quality assumptions used in the PDR.

City of Hesperia Water Reclamation Plant Design Requirements

The proposed design of the City of Hesperia Water Reclamation Plant (WRP) and related facilities was developed by the engineering consulting firm of Carollo Engineers in association with HDR through the preparation of a Preliminary Design Report for the City of Hesperia WRP published in July 2009. This document, termed a "PDR," evaluated the design performance requirements for the proposed WRP and identified the preferred alternative design for the WRP and associated facilities. A copy of this document is provided as Appendix 1 to this document. The following is a summary of the PDR findings and recommendations, drawing heavily on the text in the PDR.

Influent Loading Assumptions: As previously noted, the hydraulic capacity of the initial treatment plant will be 1.0 MGD average flow. However, the "waste load" of the plant is equally or more important to plant design, and waste load can be characterized by the pounds of BOD, TSS and TKN in the influent flow. The pounds of waste loads or mass loading rates depend on two factors: the hydraulic flow rate, which is defined initially as 1.0 MGD; and the waste concentrations of the flow. The design influent wastewater characteristics presented in the PDR are based on historical wastewater quality at the Hesperia Metering Station, located at the point of discharge to the VVWRA interceptor going to the Westside WRP.

Table 4 shows the influent water quality assumptions used in the PDR:

Table 4
DESIGN INFLUENT WASTEWATER QUALITY CHARACTERISTICS

Constituent	Unit	Annual Average[1]	Maximum Month[2]
Total BOD (Biological Oxygen Demand)	mg/L	461	691
Soluble BOD	mg/L	198	297
TSS (Total Suspended Solids)	mg/L	439	659
NH_4-N (Ammonia Nitrogen)	mg/L	29.3	38.1
TKN (Total Kjeldahl Nitrogen)	mg/L	43.3	56.3
Alkalinity[3]	mg/L	200	200
Temperature, Degrees[3]	C	17	17
pH[3]	log [H+]	7	7

Notes:
1 Total BOD, TSS, and Ammonia Nitrogen values based on 2005-2009 historical data at the Apple Valley Metering Station. Ammonia to TKN ratio and soluble BOD fraction of total BOD are based on 2007 influent data at the VVWRA Westside WRP (Westside Water Reclamation Plant Phase III Design Summary, HDR, March 1998).
2 Maximum month peaking factors of 1.5 (BOD and TSS) (and 1.3 (TKN and NH4-N) based on 2007 influent data at the VVWRA Westside WRP.
3 Based on 2007 influent data at the VVWRA WRP, Westside Water Reclamation Plant Phase III Design Summary (HDR, March 1998).

Influent Peak Flows: The City of Hesperia WRP has been designed as a scalping plant with a constant treatment flow. Therefore, hydraulic peaking factors have not been considered in the design of the WRP.

Influent Peak Mass Loadings: Like hydraulic peaking factors, influent mass loadings vary temporally (daily, weekly or monthly). The maximum anticipated constituent concentrations and peak loading factors used in the PDR are based on maximum month constituent concentrations shown in Table 4 and are 691 mg/L for BOD, 659 mg/L for TSS and 56.3 mg/L for TKN.

Assumed Treated Effluent Limitation: The treatment requirements, effluent limitations, will be established by the Regional Board through issuance of a Waste Discharge Requirements (WDR) permit. The WRP must be designed to meet these requirements, which are assumed to be established to minimize degradation of existing groundwater and surface water quality. Assumed/estimated treated effluent limits for the WRP design are shown on Table (Table 1A.2 of the PDR).

Table 5
ANTICIPATED EFFLUENT DISCHARGE LIMITATIONS AND RECOMMENDED EFFLUENT DESIGN CRITERIA FOR THE CITY OF HESPERIA WRP

Parameter	VVWRA RFP Attachment A Effluent Limit	Title 22 Water Recycling Criteria	Draft Regulation for Groundwater Recharge Reuse	Recommended Effluent Design Criteria
pH	6.5-8.5	-	-	6.5-8.5
BOD_5 (mg/L) Avg. Monthly Avg. Weekly Max Daily	 10 15 30	-	-	 10 15 30
TSS (mg/L) Avg. Monthly Avg. Weekly Max Daily	 10 15 30	-	-	 10 15 30
Total Nitrogen (mg/L)	-	-	5	8/4[1]
Turbidity (NTU) 24hr - 5% of time sample max. Any time max.	-	 0.2 0.5	-	 0.2 0.5
Total Coliform (CFU/100 ml) 7-day median 30-day one sample max. Single sample maximum	-	 2.2 23 240	-	 2.2 23 24

Note:
1 Biological process will be designed to treat to a goal of 8 mg/L, with the flexibility to meet future anticipated goal of 4 mg/L (80 percent of maximum limits of 10 and 5 mg/L, respectively).

These treated effluent values are assumed to minimize degradation of existing groundwater quality and optimize reuse potential.

Solids Handling and Disposal: The WRP will generate waste activated sludge (WAS) that will require disposal or reuse in accordance with existing state and federal regulations. The proposed scalping plant would not treat the WAS further. Instead, the WAS will be put back into the regional sewage collection system and treated at the regional Westside WRP.

WRP Onsite Facilities: The overall treatment process selected for the Hesperia WRP is a Membrane Bioreactor approach to treating wastewater. The Hesperia WRP will be comprised of the following:

- Influent lift station (a separate lift station is proposed and discussed below)
- Screening - 2 mm rotary drum screens
- Activated sludge process - biological process to meet a total nitrogen limit of 10 mg/L, with flexibility to meet future nitrogen regulations of less than 5 mg/L
- Membrane filtration - submerged hollow fiber membrane filtration system
- Ultraviolet disinfection - using low pressure high output closed vessel technology to reduce overall energy consumption
- Reclaimed water pump station -deliver water for off-site and on-site uses
- Waste activated sludge - Pumped to downstream section of adjacent collection system
- Headworks odor control - In ground non-proprietary biofilter for treatment of foul air from the screening area.

Figure 16 provides a schematic representation, Process Flow Diagram, for the above treatment process and Figure 15 shows a typical layout. The following text describes some of these essential facilities.

Primary Treatment

Headworks and Grit Chamber: The headworks remove large and stringy objects from the wastewater and removes heavy and abrasive particles (grit) for disposal into a dumpster and then the local landfill. The PDR recommends an internally fed rotating drum screen for the influent. The location of the headworks is shown on Figure 15. It encompasses an area of about 40 feet by 40 feet. Screenings from the rotary drum screens are discharged to a washer and compactor. The washer assists in control of odors from the screened materials, while the compactor decreases the volume of screenings for disposal. Screenings are transferred to a dumpster for transport to a disposal site.

Two 2-mm rotary drum screens (one on stand-by) are proposed with a capacity of 2 MGD per screen. Influent flows on the downstream side of the headworks will be discharged to one pipe. Pumps and piping, as required, will be used to internally move material at the headworks.

Coarse screening and grit removal are provided for as future expansion features if needed to supplement the fine screens.

Secondary and Tertiary Treatment

Secondary/Tertiary treatment at the WRP will consist of an activated sludge process for reduction of Biological Oxygen Demand and nutrient removal, coupled with a membrane bioreactor technology (MBR) for solids-liquids separation. Initially a four-stage Bardenpho process will be used for reduction of BOD and nutrient removal to meet the limit of 10 mg/L N, and a goal of 8 mg/L N. The biological treatment basins can then be modified to accommodate a four-stage Bardenpho

configuration to comply with the potential nutrient limit of 5 mg/L N in the future if necessary. The MBR process combines biological treatment with filtration to achieve secondary treatment plus advanced filtration. The MBR process replaces the function of secondary clarifiers and granular media (usually sand filters) or cloth disk filtration in the conventional wastewater treatment process.

Biological Treatment: The biological treatment process proposed provides, activated sludge treatment of physically screened raw wastewater. The two proposed biological treatment basins provide anoxic zones, aerobic zones (aerated), and swing zones (capability for both anoxic and aerobic treatment) for maximum removal of nutrients by microorganisms in various metabolic processes. Initial design will be for a 1.0 MGD flow with the ability to reduce Total Nitrogen to below 10 mg/L, with a goal of 8 mg/L or less, with the system designed for modification to a system in the future that would remove more nutrients if needed.

The biological treatment basins are configured as single-pass basins with internal baffles to separate the different zones and facilitate serpentine flow and minimize potential for back-mixing between adjacent zones.

Screened wastewater and returned activated sludge (from the MBR process) will be combined and equally distributed between the biological treatment basins. This mixed liquor will flow through a first anoxic zone, a swing zone, two aerobic zones, and a second swing zone. The swing zones can be operated as either an aerobic or anoxic zone depending on what is needed to remove nutrients in the wastewater. (There will also be future pump and piping from the second aeration zone back to the anoxic zone if needed in order to achieve additional denitrification to remove more nutrients prior to filtration).

At the end of the swing zone, the mixed liquor will then flow into a wet well. Pumps will transfer the mixed liquor to the MBR basins. The return activated sludge from the MBR process will overflow by gravity to the beginning of the biological treatment process.

The dimensions of the biological treatment process area are approximately 200 ft. by 60 ft.

MBR: The purpose of the MBR process is to remove suspended solids in the mixed liquor from the biological treatment process and provide a high-quality filtrate that can be effectively disinfected with UV disinfection methods. Membranes are immersed in open tanks of aerated mixed liquor. The membranes are hollow fibers with fixed pore size to prevent suspended solids from passing through. (The suspended solids resulting from the MBR system are the return activated sludge). Permeate pumps create a partial vacuum in the membrane fibers driving flow from the biological treatment process to the inside of the membrane fibers, filtering the flow. Each bundle of fibers consists of 370 sq. ft. of membrane area. These bundles are grouped together and the number of total bundles needed is determined by plant flow requirements. Two MBR systems are recommended for Phase 1 with the equivalent of one more train being needed for the second and third phases.

Scum and Waste Activated Sludge: The waste activated sludge and scum are removed on a regular basis at the end of the biological treatment process and just prior to the MBR system. They are discharged into the regional sewer collection system via the WAS pump station.

UV Disinfection: The UV Disinfection facility ensures an adequate dose of UV radiation to disinfect the treated effluent. It uses UV lamps to disinfect water. The process inactivates pathogens and other microorganisms, but does not leave a residual disinfecting effect in the recycled water. Therefore, after primary disinfection with UV light, bulk sodium hypochlorite will be used to provide

chlorine residual in the recycled water distribution system at the reclaimed water pump station. The performance standard for primary disinfection is a total coliform concentration of 2.2 MPN/100 ml maximum for the 7-day median; 1 instance per month of treated effluent exceeding 23 MPN/100 ml; and a single sample with a concentration of 240 MPN/100 ml.

The typical UV Disinfection system is an open channel, low pressure, high output system, with an automatic cleaning system for the UV lamps. However, the PDR recommends a close-channel UV system. The overall system consists of the inlet pipe from the MBR process, three UV treatment systems (with room for an additional system) and a pipe to the reclaimed water pump system. The UV treatment area is approximately 43 feet by 30 feet.

Reclaimed Water Pump Station: A reclaimed water pump station will be provided to convey the treated water for off-site and on-site recycled water uses. It will consist of a concrete clear well with vertical turbine pumps, a hydropneumatic tank to maintain plant water system pressure, a back pulse tank to store reclaimed water for membrane back pulsing, and a chlorine feed to the clear well to provide residual chlorination of the reclaimed water.

Odor Control: An in-ground biofilter will be installed for treating foul air in the screening room of the headworks.

Operations Building: An administrative, small process laboratory and bathroom facilities will be located within the WRP.

Backup Generator: An emergency backup diesel generator (approximately 350 kW) will be maintained on the property to ensure the facility can continue to operate in the event of a electrical power outage. This generator will be located on a concrete pad adjacent to the WRP structure and an 8-hour capacity above ground diesel fuel storage tank, with a leak collection containment system, will be installed adjacent to the generator.

WAS Return: WAS will be pumped from the proposed Apple Valley WRP into the existing Otoe Road Lift Station force main to allow conveyance to the downstream portion of the collection and ultimate treatment at the Westside WRP. A wet well will be installed to facilitate transfer of the WAS to the Otoe Road Lift Station.

Electrical Requirements and Control System: Estimated power supply requirements for the Hesperia WRP are estimated to be 700 kW per day. The WRP be constructed to receive power from the local utility (SCE) and distribute it through the plant. A 480 VAC line will connect underground to adjacent electricity distribution lines owned by Southern California Edison (SCE). As described above, there will be a back-up generator incorporated in the WRP to ensure the plant can operate in the event electricity is temporarily unavailable from SCE.

The instrumentation and control system will be designed to monitor and control the WRP. Allen Bradley Programmable Logic Controllers will be used for this function at the proposed WRP. The PLCs would communicate using Ethernet over a fiber optic backbone. Within a control room, the operators will interface with the system using the Wonderware Human Machine Interface (HMI). At key locations in the plant, an Industrial Personal Computer will be loaded with Wonderware screens, and would also serve as remote HMIs.

Recycled Water Lift Station: The WRP would include a recycled water lift station that will pump the recycled water to the proposed percolation basins. This facility will consist of a concrete clear well pump station, vertical turbine pumps, a hydropneumatic tank to maintain plant water system

pressure, a back pulse tank to store reclaimed water for membrane back pulsing, and a chlorine feed system to provide the residual chlorination of the reclaimed water. Refer to Figure 12 for this facility's location.

WRP Offsite Facilities

There are three types of offsite facilities.

Hesperia (Wastewater) Lift Station, Gravity Sewer and Force Main: Wastewater would be diverted from a 12-inch gravity sewer near the intersection of Mojave Street and Maple Avenue, approximately one half mile from the Alternative B proposed treatment plant, by an 18-inch sewer (~550 feet in length) and connect to the proposed lift station. The lift station would be a building of approximately 16 feet by 16 feet square surrounded by a 6-foot-high block wall on an approximate 10,000 square foot parcel on the south side of Mojave. A 12-inch force main (~1,500 feet in length) will connect the lift station to the proposed Alternative B WRP. Refer to Figure 7. Equipment at the lift station would include a wet well and centrifugal pump. The Hesperia Lift Station site plan is provided as Figure 17, and a layout is shown on Figure 18. Lift station odor control would be through a biofiltration system. Moist wood chips would allow microbes in the chips to remove hydrogen sulfide. The proposed lift station would be constructed in three phases: 1.0 MGD capacity; 2.0 MGD capacity; and potentially 4.0 MGD capacity. Phases 2 and 3 would include equipment upgrades. Phase two would add a pump impeller and motor and phase three would include installation of a third pump.

A wastewater force main from the Mojave Street lift station to the Alternative A Hesperia WRP site (west of I-15) would range from approximately 15,000 feet to 18,000 feet.

Recycled Water Pipeline: The recycled water pipeline would take water from the WRP to the percolation ponds and would require approximately 32,000 feet of 12 inch pipe. This pipeline would be installed primarily in existing street right-of-way and would cross the railroad tracks at Mesa Street.

Percolation Ponds: Percolation ponds of approximately 12 acres in area would be built on an approximately 16-acre site where percolation, would occur. The ponds would be constructed by grading the basins, including use of as much excavated material as possible to form the basin berms. Any excess excavated material would be made available to local contractors to be used as fill material.

Site Design Concepts: The facility design envisions placement of the facilities within one or two structures on the property, and one lift station structure. Figure 14 shows a conceptual design for the Apple Valley WRP that is also representative of the Hesperia WRP and wastewater lift station designs. It includes a non-metallic roof; CMU split face facade; site security fencing; and screening through use of berms and landscaping. Structure colors would be consistent with City design requirements, such as desert tones with split face blocks, etc. Exterior lighting will be minimal for safety purposes and will be directed onto the WRP site. Sound attenuation for noise facility components will be provided, either directly on the equipment or through structural controls. The nearest residence is about 50 feet from the lift station facility and about 500 feet from residences as both the Alternative A and Alternative B WRP sites. Noise attenuation at the WRP will conform with City noise requirements.

Eastside Regional WRP Potential Site Area

As previously described, there are no proposed facilities proposed for the Eastside site at this time. VVWRA's intent is to compile a data base and constraints analysis for this several hundred acre area in order to define those areas that have substantial development limitations and those areas that have minimal environmental resource limitations. A compilation of site specific environmental resource constraints and opportunities will be included in this document.

2.1.2.3 Construction Scenario

A general construction scenario has been developed to assist the reviewer to understand how the proposed facilities will be installed and the amount of time required for their construction. This information also provides essential data for making the air quality impact forecast using the most current URBEMIS emission forecast model.

WRP
The construction activities for a WRP consist of the following range of activities: excavation; mass grading of approximately three acres of land, fine grading for each area proposed for development with facilities, such as access roads, parking, storage and landscaping; installation of WRP piping, electricity lines and other required support infrastructure; construction of foundations; construction of above ground facilities, including the exterior structure; installation of treatment equipment; and assembly of materials required for treatment.

Standard construction equipment will be used, ranging from dozers, graders and cranes, to backhoes. It is anticipated that the maximum number of construction personnel on the WRP project site on any given day will be 100. A maximum number of truck deliveries, probably during pouring of concrete for facilities, are forecasted at 25 per day. Note that to install wet wells and other similar facilities at the WRP, excavation may be as deep as 25-30 feet in certain areas. Construction of a WRP is expected to require about 18 months.

Lift Station Modification
The modification of the existing lift station will be completed simultaneously with the Apple Valley WRP construction of the WRP and would likely take up to 18 months to complete.

Hesperia Wastewater Lift Station
The same sequence as outlined for the WRP will be required for the Hesperia Lift Station. It will require approximately 12 months to complete this facility.

Percolation Ponds
The percolation ponds would be located on an approximately 20-acre site and an estimated 16 of these acres would be used for percolation ponds. Standard construction equipment will be used, ranging from dozers and graders to backhoes. It is anticipated that the maximum number of construction personnel on the project site on any given day will be 25. The construction of the percolation ponds would occur simultaneously with the construction of the WRP and would take up to eight months to complete.

Sewer Collection, Force Mains and Recycled Water Pipelines
It is assumed that a sewer installation team can install approximately 200 to 400 lineal feet of sewer, force mains, or recycled water line per day. A team consists of the following:

200-400 feet of pipeline installed per day
1 Excavator
1 Backhoe
1 Paver
1 Roller
1 Water truck
10 Dump/delivery trucks (80 miles round trip distance)
Employees (11 members per team)

The emissions calculations are based upon the above assumptions for each pipeline installation team. For air emission calculations it is further assumed that pipelines will be installed concurrent with the treatment plant construction. Two teams will be installing pipelines for a maximum total of 800 lineal feet per day. It is assumed that sewer line installation will occur 100 days per year, resulting in the installation of up to 80,000 lineal feet of pipeline over this time period.

2.2 OTHER AGENCY PARTICIPATION

There are a wide range of other agencies that may have an interest in or be involved in the review and approval of the recycled water program and facilities outlined above. The following list is not intended to be exhaustive, but it provides a sense of the agencies that may participate in the review or approval of this program and specific projects. The potential participating agencies are arranged based on the individual topics contained in the Initial Study Environmental Checklist Form.

Aesthetics: Local jurisdictions, Town of Apple Valley and City of Hesperia, possibly including building permits

Agriculture: No regulatory controls, but participating reviewing agencies include San Bernardino County and the State Department of Agriculture

Air Quality: Mojave Desert Air Quality Management District, permit the operation of the WDRs and possibly individual pieces of equipment (fx, stand-by emergency generator)

Biology: If listed species are involved the U.S. Fish and Wildlife Service and/or California Department of Fish and Game (CDFG) may have to issue incidental take permits. Local jurisdictions issue plant removal permits, for Joshua trees and native cactus. The Corps of Engineers, CDFG and Lahontan Regional Board may need to participate in review of any discharge of fill into or alteration of a streambed.

Cultural Resources: If significant cultural resources may be impacted by the project, consultation with the State Historic Preservation Office (SHPO) and Native Americans may be required.

Geology & Soils: Local jurisdictions regarding development within Alquist-Priolo Seismic Hazard Zones, other geologic hazards or soils with extreme limitations (high expansion capacity).

Hazards/Hazardous Materials or Wastes: If contaminated soils exist at any of the facility locations, the California Department of Toxic Substances Control may become involved. Also, the Hazardous Materials Management group in the County Fire Department would participate in any soil remediation requirements and may issue permits for the onsite storage and use of hazardous materials and generation of hazardous waste. The County Division of Airports and Caltrans Division of Airports may

be involved with a review of airport operation conflicts related to the Alternative 2 percolation basin site in the Town of Apple Valley due to proximity to the Apple Valley Airport.

Hydrology & Water Quality: A wide range of participation will occur for these issues. The Lahontan Regional Board will issue Waste Discharge Requirements (WDR) and probably Water Recycling Requirements (WRR) for use of recycled water at both proposed WRPs. The California Department of Public Health must also review and approve the use of recycled water. The County and local jurisdictions must ensure that stormwater discharges from each of the facility sites meet the current municipal stormwater sewer standards (MS4); and a Stormwater Pollution Prevention Plan (SWPPP) must be implemented for each location where disturbance exceeds one acre. To construct a Notice of Intent must be submitted to the State Water Resources Control Board for a General Construction Permit, which is then enforced by the Regional Board. Finally, if any flood hazard areas are affected by the proposed project, County Flood Control, the City and Town, and FEMA may perform reviews for this project.

Land Use & Planning: The Town and City may issue conditional use permits for the facility and then building permits for construction, including grading and excavations.

Mineral Resources: No permits or review agencies, as mineral resources are not involved with the proposed project.

Noise: Compliance with local jurisdiction Noise Element and Noise Ordinance may be necessary due to proximity of facilities to sensitive noise receptors.

Population/ Housing: No permits or review agencies are involved with the proposed project, with the possible exception of regional planning agencies, such as Southern California Association of Governments.

Public Services: There should be no direct involvement of this project with public services, other than possible review of construction plans by the local Fire and Police Departments.

Recreation: Town of Apple Valley regarding use of a portion of Brewster Park for the proposed Apple Valley WRP.

Transportation & Traffic: Local agencies for disruption of traffic on local roadways when pipelines are installed. Caltrans will become involved if the Alternative A Hesperia WRP site is selected because pipelines will have to cross the Interstate 15 alignment.

Utilities & Service Systems: Southern California Edison will be involved in reviewing and connecting the new facilities because it provides electricity to the project area.

Southwest Gas may supply natural gas to both WRP sites and the Hesperia Lift Station.

Potable water would be supplied to the Apple Valley WRP by Apple Valley Ranchos Water Company and to the Hesperia WRP by the City of Hesperia Water Department.

Local companies would collect solid waste generated during construction and operation of all facilities, and the County's Solid Waste Management Division may review the use of the local Victorville Landfill.

Other Interested Agencies:

Bureau of Reclamation: This agency may provide funding and VVWRA envisions publishing a joint EIR/EA to fulfill this agency's National Environmental Policy Act (NEPA) requirements.

Mojave Water Agency: This agency will provide review based on its role and the Mojave Basin Watermaster and general management for groundwater resources within the Alto Subbasin.

No other reviewing or permitting agencies have been identified.

Chapter 3 CEQA CHECKLIST FORM

ENVIRONMENTAL FACTORS POTENTIALLY AFFECTED:

The environmental factors checked below would be potentially affected by this project, involving at least one impact that is a "Potentially Significant Impact" as indicated by the checklist on the following pages.

- ■ Aesthetics
- ■ Biological Resources
- ■ Hazards & Hazardous Materials
- ❑ Mineral Resources
- ❑ Public Services
- ■ Utilities / Service Systems
- ❑ Agriculture Resources
- ■ Cultural Resources
- ■ Hydrology / Water Quality
- ■ Noise
- ❑ Recreation
- ❑ Mandatory Findings of Significance
- ■ Air Quality
- ■ Geology / Soils
- ❑ Land Use / Planning
- ❑ Population / Housing
- ■ Transportation / Traffic

DETERMINATION: (To be completed by the Lead Agency)

On the basis of this initial evaluation, the following finding is made:

	The proposed project COULD NOT have a significant effect on the environment, and a NEGATIVE DECLARATION will be prepared.
	Although the proposed project could have a significant effect on the environment, there will not be a significant effect in this case because revisions in the project have been made by or agreed to by the project proponent. A MITIGATED NEGATIVE DECLARATION will be prepared.
	The proposed project MAY have a significant effect on the environment, and an ENVIRONMENTAL IMPACT REPORT is required.
■	The proposed project MAY have a "potentially significant impact" or "potentially significant unless mitigated" impact on the environment, but at least one effect 1) has been adequately analyzed in an earlier document pursuant to applicable legal standards, and 2) has been addressed by mitigation measures based on the earlier analysis as described on attached sheets. An ENVIRONMENTAL IMPACT REPORT is required, but it must analyze only the effects that remain to be addressed.
	Although the proposed project could have a significant effect on the environment, because all potentially significant effects (a) have been analyzed adequately in an earlier EIR or NEGATIVE DECLARATION pursuant to applicable standards, and (b) have been avoided or mitigated pursuant to that earlier EIR or NEGATIVE DECLARATION, including revisions or mitigation measures that are imposed upon the proposed project, nothing further is required.

Signature (prepared by) Date

Signature Date

	Potentially Significant Impact	Less Than Significant with Mitigation Incorporation	Less Than Significant Impact	No Impact or Does Not Apply
I. AESTHETICS – Would the project:				
a) Have a substantial adverse effect on a scenic vista?			■	
b) Substantially damage scenic resources, including, but not limited to, trees, rock outcroppings, and historic buildings within a state scenic highway?			■	
c) Substantially degrade the existing visual character or quality of the site and its surroundings?			■	
d) Create a new source of substantial light or glare which would adversely affect day or nighttime views in the area?		■		

SUBSTANTIATION (check ___ if project is located within the viewshed of any Scenic Route listed in the General Plan):

a. *Less than significant impact* – The proposed project would not have an adverse effect on the scenic vista. At the Apple Valley WRP site, the surrounding land uses include Brewster Park, the Otoe lift station facilities and residential uses. The pipelines will be located within existing roadway alignments and the desert background at the percolation basins consists of typical Joshua tree woodland and creosote bush scrub alluvial fan areas with a high level of human disturbance. The proposed project site is located within an area developed with mixed residential, commercial, and industrial uses.

The Hesperia WRP sites are also located on typical desert background settings with Joshua tree woodland and varying levels of urban development. Site A has extensive residential development in the surrounding area and a high level of disturbance within the surrounding native habitat. Site B is located on desert scrub habitat, but adjacent to residential subdivisions. The pipelines follow existing paved or graded roadways. The lift station is located in the vicinity of the Site B WRP on highly disturbed Joshua tree habitat, but it is also surrounded by residential development. The percolation basins are located on an undeveloped site with highly disturbed Joshua tree habitat and it is surrounded by a mix of residential and industrial uses.

Night lighting occurs throughout the project areas Individual residences have exterior night lighting and a combination of street lights and individual residential lighting occurs within the urban area of the valley.

Scenic views exist to the north and south to surrounding mountain ranges or ridges, but the project site itself has no significant or unique visual resources. Development in the surrounding area creates a human-dominated as opposed to a natural landscape visual setting.

The recycled water distribution system pipeline installation will not change land uses, or cause any above-ground visual impacts. The WRP and percolation pond sits sites will change from open space or recreation with desert vegetation to above-ground wastewater treatment facilities and recharge basins. The above ground facilities proposed would be located within an area that already contains interspersed developed lots, both residential and industrial. The proposed WRP facilities will be approximately the same height as surrounding structures and facilities, but will exhibit greater mass. Refer to Figure 14 which shows a typical structure for a WRP and isolated lift station. In addition, the above ground pipe connections will clearly identify the facilities an industrial in character. Regardless, the WRP facilities

will become part of the existing suburban setting. These changes in the visual setting after development of the proposed project will be adverse, but the degree of change at is not considered to substantially adverse. Since the project has already incorporated a commitment to meet the City and Town design standards with the exterior structure, no significant adverse impact to scenic vistas will occur on an area-wide basis and no mitigation is required.

b. *Less than significant impact* – The proposed project would not substantially damage scenic resources, including, but not limited to, trees, rock outcroppings, and historic buildings within a state scenic highway. No scenic resources, such as historical buildings, trees, or rock outcropping, would be removed, altered, or obstructed as part of the proposed project. See discussion (a) above. No scenic highways would be impacted by the proposed project.

c. *Less than significant impact* – The proposed project would not substantially degrade the existing visual character or quality of the site and its surroundings. Refer to the architectural rendering contained in Figure 14 and the discussion of design issues under Section a above. The collection system and recycled water pipelines will be placed below ground surface and therefore has no potential to degrade the existing visual character of pipeline alignments. Any pump stations and similar facilities will be housed in structures at locations that will be designed to blend in the adjacent land uses. No substantial degradation of existing visual character or quality of these alignments is forecast to result from implementing these components of the proposed project.

The WRP sites will be changed in visual appearance by implementation of the project. However, this change is consistent with surrounding land uses and landscape that has evolved in both communities. A substantial portion of the recharge sites will still remain large open areas and will be developed at grade and/or landscaped, such that degradation of visual character or quality should not be substantial (as opposed to the use of the site for residential, industrial or commercial development, as exists in the surrounding areas). The effect on the visual character of the project area would be less than significant.

d. *Less than significant impact with mitigation incorporation* – The proposed project would not create a new source of substantial light or glare which would adversely affect day or nighttime views in the area. There may be some new permanent lighting in the wastewater treatment plant area and at the recharge basin and pump station sites to support operations and safety at the proposed facility sites. However, the surrounding areas have residential, commercial and industrial development, such that the new lighting at the sites should not be considered to result in a substantial change to the project area. To protect, nearby residences or facilities from direct light and glare from new lighting, the following mitigation measure will be implemented.

I-1 A facilities lighting plan shall be prepared and shall demonstrate that glare from operating and safety night lights that may create light and glare affecting adjacent occupied property are sufficiently shielded to prevent light and glare from spilling into occupied structures. This plan shall be implemented in conformance with the Town of Apple Valley and/or City of Hesperia and it shall be reviewed and approved by the Authority staff prior to installation of the night lights.

With implementation of the above measure potential light and glare can be controlled to a less than significant impact level.

Conclusion

Based on the analysis and findings presented above, the aesthetic issue does not pose any significant adverse impacts to the environment at any of the facility locations. Therefore, the aesthetics issue will not be carried forward for evaluation in the environmental impact report (EIR) that will be prepared for this project.

	Potentially Significant Impact	Less Than Significant with Mitigation Incorporation	Less Than Significant Impact	No Impact or Does Not Apply
II. AGRICULTURE RESOURCES – In determining whether impacts to agricultural resources are significant environmental effects, lead agencies may refer to the California Agricultural Land Evaluation and Site Assessment Model (1997) prepared by the California Dept. of Conservation as an optional model to use in assessing impacts on agriculture and farmland. Would the project:				
a) Convert viable farmland (Prime Farmland, Unique Farmland, or Farmland of Statewide Importance) as shown on the maps prepared pursuant to the Farmland Mapping and Monitoring Program of the California Resources Agency, to non-agricultural use?				■
b) Conflict with existing zoning for agricultural use, or a Williamson Act contract?				■
c) Involve other changes in the existing environment which, due to their location or nature, could result in conversion of farmland to non-agricultural use?				■

SUBSTANTIATION (check ___ if project is located in the Important Farmlands Overlay):

a. *No impact* – The proposed project would not convert prime farmland, unique farmland, or farmland of statewide importance, as shown on the maps prepared pursuant to the farmland mapping and monitoring program of the California Resources Agency, to non-agricultural use.

The project sites located within the City of Hesperia are in developed areas unsuitable for general agricultural operations and are zoned for residential, commercial, industrial or other similar urban/suburban uses. The single family residential zone includes large lot residential properties that may include some agricultural uses such as equestrian use. However, the areas impacted by the proposed project within Hesperia would not include prime farmland, unique farmland, or farmland of statewide importance.

The project sites within the Town of Apple Valley are at an existing suburban park, near existing single family development and in an outlying area zoned for medium density residential development. The areas impacted by the proposed project within Hesperia would not include prime farmland, unique farmland, or farmland of statewide importance.

b. *No impact* – The proposed project would not conflict with existing zoning for agricultural use, or land under Williamson Act contract.

See issue (a) above.

c. *No impact* – The proposed project would not involve other changes in the existing environment, which due to their location or nature, could result in conversion of Farmland, to non-agricultural use.

See issue (a) above.

Conclusion

Based on the analysis and findings presented above, no direct or indirect adverse agricultural resources impacts can occur from implementing the proposed project. Therefore, this issue will not be carried forward into the EIR for evaluation.

	Potentially Significant Impact	Less Than Significant with Mitigation Incorporation	Less Than Significant Impact	No Impact or Does Not Apply
III. AIR QUALITY – Where available, the significance criteria established by the applicable air quality management or air pollution control district may be relied upon to make the following determinations. Would the project:				
a) Conflict with or obstruct implementation of the applicable air quality plan?	■			
b) Violate any air quality standard or contribute substantially to an existing or projected air quality violation?	■			
c) Result in a cumulatively considerable net increase of any criteria pollutant for which the project region is non-attainment under an applicable federal or state ambient air quality standard (including releasing emissions which exceed quantitative thresholds for ozone precursors)?	■			
d) Expose sensitive receptors to substantial pollutant concentrations?	■			
e) Create objectionable odors affecting a substantial number of people?	■			
f) Result in greenhouse gas emissions that would hinder or delay the State's ability to meet the reduction targets contained in AB 32?	■			

SUBSTANTIATION (discuss conformity with the Mohave Desert Air Quality Management Plan, if applicable):

a-f. *Potentially significant impact* – The proposed project is forecast to generate substantial air pollution emissions during both construction and operation. Significant adverse impacts to air quality may result from implementing this proposed project. All air quality issues will be addressed in the EIR.

Conclusion

Due to the potential for significant air pollution emissions a detailed technical study of these emissions will be prepared and this issue will be included in the EIR for evaluation.

	Potentially Significant Impact	Less Than Significant with Mitigation Incorporation	Less Than Significant Impact	No Impact or Does Not Apply
IV. BIOLOGICAL RESOURCES – Would the project:				
a) Have a substantial adverse effect, either directly or through habitat modifications, on any species identified as a candidate, sensitive, or special status species in local or regional plans, policies, or regulations, or by the California Department of Fish and Game or U.S. Fish and Wildlife Service?	■			
b) Have a substantial adverse effect on any riparian habitat or other sensitive natural community identified in local or regional plans, policies, regulations or by the California Department of Fish and Game or U.S. Fish and Wildlife Service?	■			
c) Have a substantial adverse effect on federally protected wetlands as defined by Section 404 of the Clean Water Act (including, but not limited to, marsh, vernal pool, coastal, etc.) through direct removal, filling, hydrological interruption, or other means?	■			
d) Interfere substantially with the movement of any native resident or migratory fish or wildlife species or with established native resident or migratory wildlife corridors, or impede the use of native wildlife nursery sites?	■			
e) Conflict with any local policies or ordinances protecting biological resources, such as a tree preservation policy or ordinance?	■			
f) Conflict with the provisions of an adopted Habitat Conservation Plan, Natural Community Conservation Plan, or other approved local, regional, or state habitat conservation plan?	■			

SUBSTANTIATION (check if project contains habitat for any species listed in the California Natural Diversity Database __✔__):

a-f. *Potentially significant impact* – These issue areas will be further analyzed in an EIR.

Conclusion

Due to the potential for significant biological resources to be impacted by the proposed project facilities, a detailed technical study of these resources will be prepared and this issue will be included in the EIR for evaluation.

	Potentially Significant Impact	Less Than Significant with Mitigation Incorporation	Less Than Significant Impact	No Impact or Does Not Apply
V. CULTURAL RESOURCES – Would the project:				
a) Cause a substantial adverse change in the significance of a historical resource as defined in '15064.5?	■			
b) Cause a substantial adverse change in the significance of an archaeological resource pursuant to '15064.5?	■			
c) Directly or indirectly destroy a unique paleontological resource or site or unique geologic feature?	■			
d) Disturb any human remains, including those interred outside of formal cemeteries?	■			

SUBSTANTIATION (cite results of cultural resource review):

a-d. *Potentially significant impact* – These issue areas will be further analyzed in an EIR.

Conclusion

Due to the potential for significant cultural resources to be impacted by the proposed project facilities, a detailed technical study of these resources will be prepared and this issue will be included in the EIR for evaluation.

	Potentially Significant Impact	Less Than Significant with Mitigation Incorporation	Less Than Significant Impact	No Impact or Does Not Apply
VI. GEOLOGY AND SOILS – Would the project:				
a) Expose people or structures to potential substantial adverse effects, including the risk of loss, injury, or death involving:				
• Rupture of a known earthquake fault, as delineated on the most recent Alquist-Priolo Earthquake Fault Zoning Map issued by the State Geologist for the area or based on other substantial evidence of a known fault? Refer to Division of Mines and Geology Special Publication 42.		■		
• Strong seismic ground shaking?		■		
• Seismic-related ground failure, including liquefaction?			■	
• Landslides?				■
b) Result in substantial soil erosion or the loss of topsoil?			■	
c) Be located on a geologic unit or soil that is unstable, or that would become unstable as a result of the project, and potentially result in onsite or offsite landslide, lateral spreading, subsidence, liquefaction or collapse?		■		
d) Be located on expansive soil, as defined in Table 18 1-B of the Uniform Building Code				■
e) Have soils incapable of adequately supporting the use of septic tanks or alternative wastewater disposal systems where sewers are not available for the disposal of wastewater?				■

SUBSTANTIATION (check ✔ if project is located in the Geologic Hazards Overlay District):

a. *Less than significant impact with mitigation incorporation* – The project would not expose people or structures to potential substantial adverse effects, including the risk of loss, injury, or death involving: Rupture of a known earthquake fault, as delineated on the most recent Alquist-Priolo Earthquake Fault Zoning Map issued by the State Geologist for the area or based on other substantial evidence of a known fault, strong seismic ground shaking or seismic-related ground failure, including liquefaction or landslides.

The proposed project sites, as with most of southern California, is in a seismically active area and will most likely be subject to substantial groundshaking during the life of the project. Habitable structures are part of the proposed project. Regardless, as an essential public facility (Risk Class 1 or II), the

WRPs must be designed to withstand the groundshaking from a predictable major seismic event on the major faults in the region (San Andreas, Helendale and Frontal Fault systems). Mitigation is identified below to address this issue.

VI-1 Comprehensive geotechnical investigations shall be required prior to engineering and design development or structural and/or substantial rehabilitation of structures identified under Risk Class I & II, e.g., public facilities, as identified below:

- ***Risk Class I & II, Structures Critically Needed after Disaster: Structures that are critically needed after a disaster include important utility centers, fire stations, police stations, emergency communication facilities, hospitals, and critical transportation elements such as bridges and overpasses and smaller dams.***
  <u>Acceptable Damage</u>: Minor non-structural; facility should remain operational and safe, or be suitable for quick restoration of service.
- ***Risk Class III: High occupancy structures; uses are required after disasters (i.e., places of assembly such as schools and churches).***
  <u>Acceptable Damage</u>: Some impairment of function acceptable; structure needs to remain operational.
- ***Risk Class IV, Ordinary Risk Tolerance: The vast majority of structures in urban areas; most commercial and industrial buildings, small hotels and apartment buildings, and single family residences.***

With implementation of the above measure, the proposed project will not subject humans to potential substantial adverse geologic constraints/effects, including the risk of loss, injury, or death involving rupture of a known earthquake fault or strong seismic ground shaking. Measures to meet this seismic mitigation measure include enhanced foundation support; use of higher quality materials and more steel in the structures; and other similar measures that ensure the proposed WRPs can function after a major seismic event.

In addition, the proposed project is not located on steep slopes and is also not subject to landslides. There is little potential for liquefaction to occur in the project area, as depth to groundwater has been identified by the U.S. Geological Survey to be more than 100 feet below the ground surface at the proposed facility locations.

b. *Less than significant impact* – The proposed project would not result in substantial soil erosion or the loss of topsoil. During construction, the construction/installation of the proposed facilities has a potential expose soil to wind erosion or to cause soil erosion due to exposure of soil to direct precipitation and subsequent surface runoff. Any erosion and sedimentation that may occur due to excavation and grading activities will be controlled through the use of appropriate use of best management practices (BMPs) for wind and water erosion and subsequent sedimentation from the areas disturbed by construction and installation activities. Because the site is larger than one acre, a NPDES general construction permit will have to be filed and a Stormwater Pollution Prevention Plan (SWPPP) and Water Quality Management Plan (WQMP) (compiled and implemented with best management practices for short-term and long-term erosion control. Therefore, potential erosion impacts related to installing the proposed facilities will not cause any significant adverse erosion or sedimentation impacts within the project APE. See a discussion of potential BMPs under Subsection 6.c below.

c. *Less than significant with mitigation incorporation* – The proposed project would not be located on a geologic unit or soil that is unstable, or that would become unstable as a result of the project, and potentially result in onsite or offsite landslide, lateral spreading, subsidence, liquefaction or collapse.

Regarding liquefaction, refer to the response to (a) above. The project sites are generally level and are not exposed to elevated terrain that could have potential for rockfalls or landslides. However, the project is located in an area of sandy soils, which are generally unstable, i.e., non-cohesive. Construction will occur in localized and contained areas such that adjacent areas should not be

affected. Certain construction practices will minimize impacts to a less than significant level, as given below.

VI-2 Construction specifications will include appropriate measures for stabilizing excavations (such as covering soil piles with plastic or using spray on soil stabilizers to control fugitive dust) based on recommendation of project geotechnical studies.

VI-3 Trenches will remain open for as short a time as possible.

VI-4 Soils, where exposed, will be stabilized with hay bales or aggregate cover.

VI-5 Construction specifications will identify proper compaction for backfilled soils.

Implementation of these measures would ensure stability of the underlying soils during construction.

d. *No impact* – The proposed project would not be located on expansive soil, creating substantial risks to life or property. The project impact area, including pipeline alignments do not contain any expansive soils, so no adverse impacts from this type of hazard will affect construction or operations. No mitigation is proposed.

e. *No impact* – The proposed project is the construction and installation of wastewater treatment and water recycling facilities. The project does not include installation or operation of any proposed septic tanks, so there can be no adverse impacts regarding this issue. No mitigation is proposed.

Conclusion

Based on the analysis and findings presented above, no direct or indirect significant adverse geology or soil resources impacts can occur from implementing the proposed project. Therefore, this issue will not be carried forward into the EIR for evaluation.

	Potentially Significant Impact	Less Than Significant with Mitigation Incorporation	Less Than Significant Impact	No Impact or Does Not Apply
VII. HAZARDS AND HAZARDOUS MATERIALS – Would the project:				
a) Create a significant hazard to the public or the environment through the routine transport, use, or disposal of hazardous materials?		■		
b) Create a significant hazard to the public or the environment through reasonably foreseeable upset and accident conditions involving the release of hazardous materials into the environment?		■		
c) Emit hazardous emissions or handle hazardous or acutely hazardous materials, substances, or waste within one-quarter mile of an existing or proposed school?			■	
d) Be located on a site which is included on a list of hazardous materials sites compiled pursuant to Government Code Section 65962.5 and, as a result, would it create a significant hazard to the public or the environment?				■
e) For a project located within an airport land use plan or, where such a plan has not been adopted, within two miles of a public airport or public use airport, would the project result in a safety hazard for people residing or working in the project area?			■	
f) For a project within the vicinity of a private airstrip, would the project result in a safety hazard for people residing or working in the project area?			■	
g) Impair implementation of or physically interfere with an adopted emergency response plan or emergency evacuation plan?			■	
h) Expose people or structures to a significant risk of loss, injury or death involving wildland fires, including where wildlands are adjacent to urbanized areas or where residences are intermixed with wildlands?				■

SUBSTANTIATION:

a. *Less than significant impact with mitigation incorporation* – The proposed project poses a low potential to create a significant hazard to the public or the environment through the routine transport, use, or disposal of hazardous materials. During construction there is a potential for accidental release of petroleum products in sufficient quantity to pose a substantial hazard to people and the environment. An accidental spill of diesel fuel or of other petroleum products, such as oil, radiator fluid or transmission fluid from a piece of construction equipment, poses a hazard to both employees and the environment where it occurs. Best Management Practices will be implemented and these measures would reduce such potential hazards to a less than significant impact level by ensuring that any spills are immediately remediated during construction and returned to an uncontaminated condition.

   Once construction is completed, there will be routine transport or use of hazardous materials at the WRP project sites, for maintenance of equipment and wastewater treatment processes. The Authority already has its own operational procedures that address potential impacts from routine transport and use of hazardous materials in conjunction with the water supply system. Long-term BMPs and a Spill Prevention Control Countermeasures (SPCC) Plan will control the accidental releases of petroleum products and other chemicals or wastes associated with a wastewater treatment operations. No additional mitigation to control accidental releases during operations is needed.

b. *Less than significant impact with mitigation incorporation* – The proposed project would not create a significant hazard to the public or the environmental through reasonably foreseeable upset and accident conditions involving the release of hazardous materials into the environment.

   See discussion under (a) above. A potential for accidental releases of hazardous substances does exist, but all prudent measures for response, containment, clean-up and disposal provide sufficient controls to render this risk potential hazard acceptable in the provision of essential services. With implementation of the measures identified, potential exposures to accidental releases of hazardous substances can be managed at a level of less than significant adverse impact on the area's human population and environment.

   The project area is located within an area developed with a mix of residential, commercial, and industrial uses. Construction activities could emit hazardous emissions or involve some hazardous materials. These activities will not occur on a large enough scale to affect these uses on adjacent areas. Additionally, they are temporary activities which limit the potential exposure.

c. L*ess than significant impact* – The project would not emit hazardous emissions or handle hazardous or acutely hazardous materials, substances, or waste within one-quarter mile of an existing or proposed school. There are schools within the general vicinity of the proposed facilities. The new WRP sites would be required to have disinfection ability. Use of sodium hypochlorite is proposed, which does not pose an acute hazard to humans, when handled properly. Use of sodium hypochlorite poses a limited hazard, which can be readily controlled through implementation of the required Spill Prevention Control Countermeasures Plan. Additionally, the proposed wastewater treatment plant sites will be constructed with a security fence which will control entry. Thus, the new chemical uses and related hazards at the WRP sites are considered to be manageable without causing a substantial risk to the existing and future surrounding population, including the local schools.

d. *No impact* – The project would not be located on a site, or sites, included on a list of hazardous materials sites compiled pursuant to Government Code Section 65962.5 and, as a result, would not create a significant hazard to the public or the environment. The proposed wastewater treatment plant sites, lift station, percolation ponds and pipeline routes do not have, nor are near any "active" listed hazardous materials sites.

   One active LUFT site is more than one-half mile from and within one mile of a potential pipeline route linking the proposed Apple Valley WRP to a potential recycled water percolation pond site at Burbank and Dale Evans. The site is at the Apple Valley Airport and has potential soil contamination from

aviation fuel and related products (Aztec Aviation Company, 1600 Corwin Road, Apple valley, CA). There are also two former military sites approximately one mile from the proposed percolation ponds at Burbank and Dale Evans. These sites are former artillery and bombing ranges, may be contaminated with lead and unexploded ordnance, and are under military investigation. The proposed project has no potential to create a substantial hazard by exposing the public to such sites because of its distance from the sites. No mitigation is proposed.

e. *Less than significant impact* – Parts of the project (Antelope Valley WRP, recycled water distribution system and percolation ponds) are within two miles of the Apple Valley Airport, a small County "general aviation" airport. However, the project would not result in a safety hazard for people residing or working in the project area. Temporary construction activities or wastewater treatment plant operations near the airport would not pose a safety hazard. No potential exists to conflict with the local airport land use plan. No mitigation is proposed.

f. *Less than significant impact* – See response to (e) above.

g. *Less than significant impact* – The proposed project would not impair implementation of or physically interfere with an adopted emergency response plan or emergency evacuation plan. The project is located off of existing local roads and will have only limited potential to cause interference with an emergency response or evacuation plan during construction. Any impact to roads would be temporary and less than substantial with implementation of mitigation outlined under transportation/traffic in Section XV of this initial study.

h. *No impact* – The proposed project is not located in a wildland fire hazard area and would not expose people or structures to a significant risk of loss, injury or death involving wildland fires, including where wildlands are adjacent to urbanized areas or where residences are intermixed with wildlands.

Conclusion

Based on the analysis and findings presented above, no direct or indirect significant adverse hazards or hazardous material impacts can occur from implementing the proposed project. Therefore, this issue will not be carried forward into the EIR for evaluation.

	Potentially Significant Impact	Less Than Significant with Mitigation Incorporation	Less Than Significant Impact	No Impact or Does Not Apply
VIII. HYDROLOGY AND WATER QUALITY – Would the project:				
a) Violate any water quality standards or waste discharge requirements?	■			
b) Substantially deplete groundwater supplies or interfere substantially with groundwater recharge such that there would be a net deficit in aquifer volume or a lowering of the local groundwater table level (e.g., the production rate of pre-existing nearby wells would drop to a level which would not support existing land uses or planned uses for which permits have been granted)?	■			
c) Substantially alter the existing drainage pattern of the site or area, including through the alteration of the course of a stream or river, in a manner which would result in substantial erosion or siltation onsite or offsite?	■			
d) Substantially alter the existing drainage pattern of the site or area, including through the alteration of the course of a stream or river, or substantially increase the rate or amount of surface runoff in a manner which would result in flooding onsite or offsite?	■			
e) Create or contribute runoff water which would exceed the capacity of existing or planned stormwater drainage systems or provide substantial additional sources of polluted runoff?	■			
f) Otherwise substantially degrade water quality?	■			
g) Place housing within a 100-year flood hazard area as mapped on a federal Flood Hazard Boundary or Flood Insurance Rate Map or other flood hazard delineation map?	■			
h) Place within a 100-year flood hazard area structures which would impede or redirect flood flows?	■			
i) Expose people or structures to a significant risk of loss, injury or death involving flooding, including flooding as a result of the failure of a levee or dam?	■			
j) Inundation by seiche, tsunami, or mudflow?	■			

SUBSTANTIATION:

a-j. *Potentially significant impact* – These issue areas will be further analyzed in an EIR.

Conclusion

Due to the potential for significant hydrology and water quality impacts by the proposed project facilities, a detailed technical study of these resources will be prepared and this issue will be included in the EIR for evaluation.

	Potentially Significant Impact	Less Than Significant with Mitigation Incorporation	Less Than Significant Impact	No Impact or Does Not Apply
IX. LAND USE AND PLANNING – Would the project:				
a) Physically divide an established community?				■
b) Conflict with any applicable land use plan, policy, or regulation of an agency with jurisdiction over the project (including, but not limited to the general plan, specific plan, local coastal program, or zoning ordinance) adopted for the purpose of avoiding or mitigating an environmental effect?	■			
c) Conflict with any applicable habitat conservation plan or natural community conservation plan?	■			

SUBSTANTIATION:

a. *No impact* – The proposed project would not physically divide an established community. It provides wastewater treatment and recycled water facilities to the existing community and helps conserve potable water by making recycled water more readily available for non-potable uses.

b. *Potentially significant impact* – The project envisions construction and operation of the WRPs in areas where residential uses occur in the immediate vicinity. Because the wastewater treatment operations and activities generate noise and air pollutants, a potential exists for a significant land use conflict. This issue will be examined in detail in the EIR that will be prepared for this project.

c. *No Impact* – There are no adopted habitat conservation plans or natural community conservation plans that overlay any of the proposed project facilities. Without any such plans applicable to the project area, no potential exists for a conflict to occur between the proposed project and such plans.

Conclusion

Due to the potential for significant land use conflicts for the proposed water treatment facilities, a detailed evaluation of such potential conflicts will be compiled and this issue will be included in the EIR for evaluation.

	Potentially Significant Impact	Less Than Significant with Mitigation Incorporation	Less Than Significant Impact	No Impact or Does Not Apply
X. MINERAL RESOURCES – Would the project:				
a) Result in the loss of availability of a known mineral resource that would be of value to the region and the residents of the state?			■	
b) Result in the loss of availability of a locally important mineral resource recovery site delineated on a local general plan, specific plan or other land use plan?			■	

SUBSTANTIATION (check ___ if project is located within the Mineral Resources Zone Overlay):

a. *Less than significant impact* – The project would not result in the loss of availability of a known mineral resource that would be of value to the region and the residents of the state. The whole of the proposed project area is part of an alluvial fan that contains rock, sand and gravel resources over much of the Victor Valley with the best resources located near the Mojave River. The project area is generally classified as Mineral Resource Zone -3a by the State of California Division of Mines and Geology, having known minerals of undetermined significance (Figure III-8, Town of Apple Valley General Plan (2009). However, the proposed project has no potential to remove any mineral resources from availability to the region or state. The proposed project would be implemented in developed areas or within roadways and limited amounts of undeveloped land. No plans for future mining operations exist in or near the project impact area. No mitigation is proposed.

b. *Less than significant impact* – The project would not result in the loss of availability of a locally important mineral resource recovery site delineated on a local general plan, specific plan or other land use plan. . There are no active mines in the project area (Figure 6-11c, Conservation Background Report, County of San Bernardino General Plan and General Plan EIR, 2006). The proposed project would be implemented in developed areas or within roadways and limited amounts of undeveloped land. No locally important mineral resources would be impacted by the proposed project. No mitigation is proposed.

Conclusion

Based on the analysis and findings presented above, no direct or indirect significant adverse mineral resource impacts can occur from implementing the proposed project. Therefore, this issue will not be carried forward into the EIR for evaluation.

	Potentially Significant Impact	Less Than Significant with Mitigation Incorporation	Less Than Significant Impact	No Impact or Does Not Apply
XI. NOISE – Would the project result in:				
a) Exposure of persons to or generation of noise levels in excess of standards established in the local general plan or noise ordinance, or applicable standards of other agencies?	■			
b) Exposure of persons to or generation of excessive groundborne vibration or groundborne noise levels?	■			
c) A substantial permanent increase in ambient noise levels in the project vicinity above levels existing without the project?	■			
d) A substantial temporary or periodic increase in ambient noise levels in the project vicinity above levels existing without the project?	■			
e) For a project located within an airport land use plan or, where such a plan has not been adopted, within two miles of a public airport or public use airport, would the project expose people residing or working in the project area to excessive noise levels?	■			
f) For a project within the vicinity of a private airstrip, would the project expose people residing or working in the project area to excessive noise levels?				■

SUBSTANTIATION

a-e. *Potentially significant impact* – These issue areas will be further analyzed in an EIR.

f. *No Impact* – No private airports are located within the vicinity of the proposed project. Therefore, no potential exists to expose residents or employees to excessive noise from operations at such an airport.

Conclusion

Due to the potential for significant noise during construction and operation and associated land use conflicts for the proposed water treatment facilities, a detailed technical study of the noise environment and noise impacts will be prepared and this issue will be included in the EIR for evaluation.

	Potentially Significant Impact	Less Than Significant with Mitigation Incorporation	Less Than Significant Impact	No Impact or Does Not Apply
XII. POPULATION AND HOUSING – Would the project:				
a) Induce substantial population growth in an area, either directly (for example, by proposing new homes and businesses) or indirectly (for example, through extension of roads or other infrastructure)?	■			
b) Displace substantial numbers of existing housing, necessitating the construction of replacement housing elsewhere?				■
c) Displace substantial numbers of people, necessitating the construction of replacement housing elsewhere?				■

SUBSTANTIATION:

a. *Potentially significant impact* – This issue area will be further analyzed in an EIR.

b. *No impact* – The proposed project would not displace substantial numbers of existing housing, necessitating the construction of replacement housing elsewhere.

No housing resources will be displaced by the proposed project, as all construction and operation activities will occur at locations without any housing. The pipeline routes will be primarily located within existing road rights-of-way. No impact is identified and no mitigation is proposed.

c. *No impact* – The proposed project would not displace substantial numbers of people, necessitating the construction of replacement housing elsewhere.

The project has no potential to impact any existing housing or cause the displacement of people. No impact is identified and no mitigation is required. The proposed wastewater treatment facilities have no potential to adversely impact any communities.

Conclusion

Due to the potential for potential growth inducement as a result of installing the proposed water treatment facilities, a detailed evaluation of potential growth inducement will be compiled and this issue will be included in the EIR for evaluation.

	Potentially Significant Impact	Less Than Significant with Mitigation Incorporation	Less Than Significant Impact	No Impact or Does Not Apply
XIII. PUBLIC SERVICES – Would the project result in substantial adverse physical impacts associated with the provision of new or physically altered governmental facilities, need for new or physically altered governmental facilities, the construction of which could cause significant environmental impacts, in order to maintain acceptable service ratios, response times or other performance objectives for any of the public services:				
a) Fire protection?			■	
b) Police protection?			■	
c) Schools?				■
d) Recreation/Parks?				■
e) Other public facilities?				■

SUBSTANTIATION:

a. *Less than significant impact* – The proposed project would not have significant impacts on fire protection. The project would result in installation and operation wastewater treatment plants, percolation ponds, pump stations, recycled water pipeline and related facilities. Electricity would be the power source for operation of the treatment plants and other equipment and a diesel generator for back-up emergency power would also be used. Any construction job, or ongoing operation and maintenance of a facility, can result in accidents and require emergency services. Such events are limited by following all applicable safety guidelines and procedures. Fencing around the perimeter of the facilities would also limit access and minimize accidents due to trespass. No significant demand is forecast to result from installing and operating the proposed new facilities. Any demand for fire or emergency response resources in the project area would be random and is not forecast to create a substantial demand for such resources. No significant impact is forecast to occur and no mitigation is required.

b. *Less than significant impact* – The proposed project is not the kind of use that will likely attract criminal activity. Indirectly any construction activity can have accidents or thefts and require law enforcement services. Fencing around the perimeter of the facilities would also limit unauthorized access to the site. No significant demand has been identified for police protection resources that would require new police facilities. No significant impact is forecast to occur and no mitigation is required.

c-e. *No impact* – The proposed project will not generate many new long-term jobs (estimated to be 100-200 during construction and estimated to be about 20 jobs at each facility during operations, or 40 total) or attract new residents to the area that would not occur without the project. No negative impacts on nearby schools, parks or other public facilities can be identified. No mitigation is required.

Conclusion

Based on the analysis and findings presented above, no direct or indirect significant adverse public service impacts can occur from implementing the proposed project. Therefore, this issue will not be carried forward into the EIR for evaluation.

	Potentially Significant Impact	Less Than Significant with Mitigation Incorporation	Less Than Significant Impact	No Impact or Does Not Apply
XIV. RECREATION –				
a) Would the project increase the use of existing neighborhood and regional parks or other recreational facilities such that substantial physical deterioration of the facility would occur or be accelerated?				■
b) Does the project include recreational facilities or require the construction or expansion of recreational facilities which might have an adverse physical effect on the environment?			■	

SUBSTANTIATION:

a. *No impact* – The proposed project would not increase the use of existing neighborhood and regional parks or other recreation facilities such that substantial physical deterioration of such facilities would occur or be accelerated. The project is not forecast to cause any substantial increase in demand for any recreational facilities in the project area since no substantial increase in population is forecast to occur as a result of implementing the project. This finding applies to both the construction and operation period of the project. No mitigation is proposed.

b. *Less than significant impact* – The proposed project includes development at existing recreational facilities, but would not require the construction or expansion of recreational facilities which might have an adverse physical effect on the environment. There would remain adequate recreational facilities next to the WRP site to serve the community. As noted above, the proposed project includes no recreation facilities and will not increase the demand for recreational facilities, so no additional adverse impacts associated with their construction can occur. No mitigation is proposed.

Conclusion

Based on the analysis and findings presented above, no direct or indirect significant adverse recreation impacts can occur from implementing the proposed project. Therefore, this issue will not be carried forward into the EIR for evaluation.

	Potentially Significant Impact	Less Than Significant with Mitigation Incorporation	Less Than Significant Impact	No Impact or Does Not Apply
XV. TRANSPORTATION / CIRCULATION – Would the project:				
a) Cause an increase in traffic which is substantial in relation to the existing traffic load and capacity of the street system (i.e., result in a substantial increase in either the number of vehicle trips, the volume to capacity ratio on roads, or congestion at intersections)?			■	
b) Exceed, either individually or cumulatively, a level of service standard established by the county congestion management agency for designated roads or highways?			■	
c) Result in a change in air traffic patterns, including either an increase in traffic levels or a change in location that results in substantial safety risks?				■
d) Substantially increase hazards due to a design feature (e.g., sharp curves or dangerous intersections) or incompatible uses (e.g., farm equipment)?		■		
e) Result in inadequate emergency access?		■		
f) Result in inadequate parking capacity?			■	
g) Conflict with adopted policies, plans, or programs supporting alternative transportation (e.g., bus turnouts, bicycle racks)?			■	

SUBSTANTIATION:

a. *Less than significant* – The proposed project would the not cause an increase in traffic which is substantial in relation to the existing traffic load and capacity of the street system (i.e., result in a substantial increase in either the number of vehicle trips, the volume to capacity ratio on roads, or congestion at intersections).

The proposed project will have its greatest impact on traffic during the period of construction. Construction activities will result in an increase in traffic due to construction worker commuting and equipment and materials deliveries. A estimated total of 50 (pipeline installation) to 200 (WRP construction) vehicle trips per day are expected during the construction period. The additional traffic for the construction period, estimated to be about 100 trips per day, should not bring traffic volumes to levels out of the capacity for existing roadways expected.

Operation impacts on the circulation system should be minimal. Overall, it is not anticipated that the project will require more than a 20 to 40 vehicle trips per day by employees and routine deliveries to the proposed facilities. Regarding the recycled water pipeline alignment, once the pipeline is emplaced, there should be little maintenance required such that traffic would be generated on a routine basis. Mitigation to address short-term construction impacts on traffic flow are provided below.

b. *Less than significant impact* – The project would not exceed, either individually or cumulatively, a level of service standard established by the County congestion management agency or the City or Town for designated roads or highways. As described above, the proposed project will not generate sufficient traffic during construction or operations to reduce the level of service on any of the roads that serve the project area. Therefore, the proposed project is not forecast to result in significant impacts and no mitigation is required.

c. *No impact* – The project would not result in a change in air traffic patterns, including either an increase in traffic levels or a change in location that results in substantial safety risks. Construction and operation activities for the proposed project have no potential to affect any air traffic patterns. No impact can occur and no mitigation is required.

d. *Less than significant impact with mitigation incorporation* – The proposed project would not substantially increase hazards due to a design feature (i.e., sharp curves or dangerous intersections) or incompatible uses (i.e., farm equipment).

The proposed project will only affect flow of traffic during the construction period, particularly along the pipeline alignments within and crossing existing roadways. No new permanent road hazards are forecast to occur from implementing the proposed project. During the construction period, potential road hazards will occur and mitigation will be required to control traffic in a safe manner along the pipeline route and ensure adequate emergency access to all property along the pipeline alignments. Without mitigation short-term access, including emergency access, could experience substantial adverse effects.

<u>Mitigation measures to reduce construction traffic impacts</u>

XV-1 The construction contractor will provide adequate traffic management resources, such as protective devices, flag persons, and police assistance for traffic control, to maintain safe traffic flow on local streets affected by facilities and pipeline construction at all times.

XV-2 The construction contractor will identify traffic hazards created by construction, such as rough road or potholes, freshly paved locations, and minimize total traffic and vehicle speed through such hazards.

XV-3 The construction contractor will ensure that traffic safety hazards, such as uncovered or unfilled open trenches, will not be left in roadways during period of time when construction personnel are not present, such as nighttime and weekends.

XV-4 The construction contractor will repair all roads adequately after construction to ensure that traffic can move in the same manner as before construction.

XV-5 At all times during construction, the contractor will ensure that emergency fire, police or medical vehicles are able to access all adjacent areas. Additionally, construction equipment or activities must not obstruct or hinder traffic that might be generated during an evacuation.

Implementation of the above measures will ensure that no substantial short-term traffic hazards will be caused by the proposed project.

e. *Less than significant impact with mitigation incorporation* – The proposed project pipeline construction has a potential to cause inadequate emergency access. Mitigation measure XV-5 above will ensure that emergency access will be maintained at all times during construction.

Adequacy of emergency access is discussed above (Subsection d., and Mitigation Measure XV-5) and mitigation has been required to ensure that adequate emergency access to all occupied property is provided during construction.

f. *Less than significant impact* – The proposed project would not result in inadequate parking capacity. Construction staging areas and construction sites will incorporate adequate construction space for the number of employees working on the individual areas.

The proposed project does not create a need for substantial new parking capacity, other than that needed at the wastewater treatment plant percolation pond and lift station sites. No more than ten to 20 vehicles might be at each site at any one time during operation. There is more than adequate room on the facility sites to provide adequate parking space for employees, vendors and visitors.

g. *Less than significant impact* – The proposed project would not conflict with adopted policies, plans, or programs supporting alternative transportation (i.e., bus turnouts, bicycle racks). This project has no effect and no potential to conflict with alternative transportation programs.

Conclusion

Based on the analysis and findings presented above, no direct or indirect significant adverse traffic or circulation impacts can occur from implementing the proposed project. Therefore, this issue will not be carried forward into the EIR for evaluation.

	Potentially Significant Impact	Less Than Significant with Mitigation Incorporation	Less Than Significant Impact	No Impact or Does Not Apply
XVI. UTILITIES AND SERVICE SYSTEMS – Would the project:				
a) Exceed wastewater treatment requirements of the applicable Regional Water Quality Control Board?	■			
b) Require or result in the construction of new water or wastewater treatment facilities or expansion of existing facilities, the construction of which could cause significant environmental effects?	■			
c) Require or result in the construction of new stormwater drainage facilities or expansion of existing facilities, the construction of which could cause significant environmental effects?			■	
d) Have sufficient water supplies available to serve the project from existing entitlements and resources, or are new or expanded entitlements needed?			■	
e) Result in a determination by the wastewater treatment provider which serves or may serve the project that it has adequate capacity to serve the project's projected demand in addition to the provider's existing commitments?				■
f) Be served by a landfill(s) with sufficient permitted capacity to accommodate the project's solid waste disposal needs?			■	
g) Comply with federal, state, and local statutes and regulations related to solid waste?			■	

SUBSTANTIATION:

a. *Potentially significant impact* – The proposed WRPs will be subject to wastewater discharge requirements from the Lahontan Regional Water Quality Control Board and the proposed recharge activities will also be subject to Regional Board review and possibly approval. Ultimately the proposed WRPs must meet waste discharge requirements or the wastewater treatment facilities and percolation ponds cannot operate. As a result, the WRPs have been specifically designed to meet the anticipated waste discharge requirements. Regardless, water quality issues in this portion of the Mojave River Basin are complex and somewhat controversial. Therefore, the issue of wastewater treatment requirements will be evaluated as part of the overall cumulative water quality issues for the Alto Subbasin of the Mojave River Basin, and any potential downstream effects related to water quality. This issue will be evaluated in the EIR that will be prepared for this project.

b. *Potentially significant impact* – The proposed project is the construction of new wastewater treatment facilities (actually an expansion of the existing regional facility) and as demonstrated in this Initial Study, the construction of these facilities which may cause significant environmental effects. Since the specific focus of this environmental evaluation is the construction of new wastewater treatment facilities, the "potentially significant impact" box has been checked, but it is the whole of the CEQA review process for this proposed project that examines this issue in the EIR. Therefore, this specific topic will be addressed generally in the EIR, not as a specific topic.

c. *Less than significant impact* – The project would not require or result in the construction of new stormwater drainage facilities or expansion of existing facilities, the construction of which could cause significant environmental effects.

Stormwater flows within the project area may be altered by installation of the pipelines, percolation ponds or the proposed WRPs and lift station. To address potential impacts to stormwater flows during construction, this document requires mitigation through effective implementation of best management practices during construction and operation. Once the pipelines are installed beneath roadways or across channels, no change in stormwater flow is forecast to occur during operation as a result of installing the proposed facilities.

Stormwater flow generated within the proposed project sites would continue to be discharged to the existing stormwater surface drainage system. No change in offsite downstream drainage facilities will be required from implementing the proposed project. Temporary stormwater management measures will be implemented during construction of the proposed facilities. No potential exists to require new major public stormwater facilities to be constructed or expanded downstream of the project sites. No significant impact is forecast to occur and no mitigation is required.

d. *Less than significant impact* – The proposed project would have sufficient water supplies available to serve the project from existing entitlements and resources, and no new or expanded entitlements are needed. The production of recycled water that can be used to offset potable water demand will actually result in an increase of available water supply within the VVWRA service area, specifically the Town of Apple Valley and the City of Hesperia.

The proposed project is the construction and installation of wastewater treatment and recycled water facilities, and does not include the need for substantial additional water supplies. Minimal amounts of potable water will be needed within the WRPs for typical domestic uses and laboratory uses. Demand by each of the WRPs is forecast to be comparable to four or five equivalent dwelling units. Thus, no potential exists for significant adverse impact to water supplies from implementing this project. Other than meeting current water conservation requirements for fixtures in the WRPs, no mitigation is required.

e. *No impact* – The project would not result in a determination by the wastewater treatment provider which serves or may serve the project that it has adequate capacity to serve the project's projected demand in addition to the provider's existing commitments.

The proposed project is the construction and installation of a new wastewater treatment plants and related facilities. Therefore, the proposed project will not generate any wastewater or affect the treatment capacity of any existing wastewater treatment provider. No additional impact can occur and no mitigation is required.

f. *Less than significant Impact* – The project would be served by a landfill(s) with sufficient permitted capacity to accommodate the project's solid waste disposal needs.

The volume of solid waste that will be generated during construction will be minor. During construction, it will consist of onsite vegetation that will be removed during site clearing and some construction waste generated during construction of the pipelines, percolation ponds, lift station and wastewater treatment plants. The vegetative waste can be chipped and used as mulch or removed to a licensed municipal

landfill. Construction waste can be delivered to the Victorville Landfill. Small quantities of municipal waste may be generated during operations (less than a cubic yard per week).

During operations the new WRPs will not generate new biosolids. This is because the solid component of the wastewater stream entering the plant will be segregated and returned to the wastewater collection system for delivery to the Westside Wastewater Reclamation Plant. In essence, the new WRPs will be capturing the same volume of wastewater that would have been delivered to the Westside WRP without the new WRPs. The screened waste from all three facilities is anticipated to be approximately the same at that which would be generated if all the wastewater is delivered to the Westside WRP. This screened waste is currently delivered to the regional landfill in Victorville for disposal, and it will continue to be delivered to this location. The Victorville Landfill has the ability and capacity (San Bernardino County 2008, General Plan and General Plan EIR) to accept the waste materials generated by the operating WRPs.

Collection and transport of biosolids and other solids to the Victorville Landfill is a routine procedure and internally, adequate waste handling procedures have been set up by the Authority (collection, storage and transfer to the transport trucks) and this project should not adversely impact current or future operations landfill operations. Adequate disposal capacity is available at the Victorville regional landfill or other landfills in the region. No mitigation is required, other than mandated recycling of materials capable of being recycled in accordance with existing regulations requiring that 50 percent of waste be diverted from landfills and into recycling programs, already governed under Water Authority operations.

g. *Less than significant impact* – The proposed project would comply with federal, state and local statutes and regulations related to solid waste.

The proposed project's construction contractor will be required to comply with all regulations related to solid waste. As stated above, the Authority will hire a licensed third party to haul biosolids offsite once the project is operational. It will be disposed at a municipal solid waste landfill, unless a local or regional market for the biosolids can be identified that complies with existing biosolids management requirements. No additional mitigation is required.

	Potentially Significant Impact	Less Than Significant with Mitigation Incorporation	Less Than Significant Impact	No Impact or Does Not Apply
XVII. MANDATORY FINDINGS OF SIGNIFICANCE –				
a) Does the project have the potential to degrade the quality of the environment, substantially reduce the habitat of a fish or wildlife species, cause a fish or wildlife population to drop below self-sustaining levels, threaten to eliminate a plant or animal community, reduce the number or restrict the range of a rare or endangered plant or animal or eliminate important examples of the major periods of California history or prehistory?	■			
b) Does the project have impacts that are individually limited, but cumulatively considerable? ("Cumulatively considerable" means that the incremental effects of a project are considerable when viewed in connection with the effects of past projects, the effects of other current projects, and the effects of probable future projects)?	■			
c) Does the project have environmental effects which will cause substantial adverse effects on human beings, either directly or indirectly?	■			

SUBSTANTIATION:

a. *Potentially Significant Impact* – Potential impacts to biological and cultural resources will be evaluated in the EIR.

b. *Potentially Significant Impact* – The project will construct wastewater treatment and conveyance facilities to provide recycled water to portions of the Town of Apple Valley and City of Hesperia service areas. This project does not rely on other development. No other water or wastewater improvements are associated with or reliant upon this project.

This document evaluated all CEQA issues contained in the latest Initial Study Checklist form. The evaluation determined that either no impact or less than significant impacts would be associated with the issues of: agricultural resources, minerals, population/housing, and recreation. No mitigation was proposed for these issues and potential impacts are neither individually nor cumulatively significant. For the issues of: aesthetics, geology and soils, hazards, public services and traffic/transportation all potential impacts were determined to be less than significant both individually and cumulatively with implementation of identified mitigation.

For the issues of: air quality, biological resources, cultural resources, hydrology/water quality, land use and planning, noise, population and growth inducement, and utilities and service systems some or all potential impacts addressed on the Checklist were determined to be potentially significant and specified items will be addressed in the EIR. For the issues of land use and planning, population and growth inducement and utilities/service the impacts associated with many issues were determined to be less

than significant both individually and cumulatively without mitigation or in some instances with implementation of identified mitigation, but each issue also contained items that require further consideration in the EIR.

c. *Potentially Significant Impact* – The environmental issues with potential for substantial impacts to humans include: air quality, hydrology/water quality, land use conflicts, and noise. These topics have been identified as potentially significant impacts and these issues will all be evaluated in the EIR to be prepared for this project.

Aesthetics

I-1 A facilities lighting plan shall be prepared and shall demonstrate that glare from operating and safety night lights that may create light and glare affecting adjacent occupied property are sufficiently shielded to prevent light and glare from spilling into occupied structures. This plan shall be implemented in conformance with the Town of Apple Valley and/or City of Hesperia and it shall be reviewed and approved by the Authority staff prior to installation of the night lights.

Geology and Soils

VI-1 Comprehensive geotechnical investigations shall be required prior to engineering and design development or structural and/or substantial rehabilitation of structures identified under Risk Class I & II, e.g., public facilities, as identified below:

- Risk Class I & II, Structures Critically Needed after Disaster: Structures that are critically needed after a disaster include important utility centers, fire stations, police stations, emergency communication facilities, hospitals, and critical transportation elements such as bridges and overpasses and smaller dams.
  Acceptable Damage: Minor non-structural; facility should remain operational and safe, or be suitable for quick restoration of service.
- Risk Class III: High occupancy structures; uses are required after disasters (i.e., places of assembly such as schools and churches).
  Acceptable Damage: Some impairment of function acceptable; structure needs to remain operational.
- Risk Class IV, Ordinary Risk Tolerance: The vast majority of structures in urban areas; most commercial and industrial buildings, small hotels and apartment buildings, and single family residences.

VI-2 Construction specifications will include appropriate measures for stabilizing excavations (such as covering soil piles with plastic or using spray on soil stabilizers to control fugitive dust) based on recommendation of project geotechnical studies.

VI-3 Trenches will remain open for as short a time as possible.

VI-4 Soils, where exposed, will be stabilized with hay bales or aggregate cover.

VI-5 Construction specifications will identify proper compaction for backfilled soils.

Transportation / Circulation

XV-1 The construction contractor will provide adequate traffic management resources, such as protective devices, flag persons, and police assistance for traffic control, to maintain safe traffic flow on local streets affected by facilities and pipeline construction at all times.

XV-2 The construction contractor will identify traffic hazards created by construction, such as rough road or potholes, freshly paved locations, and minimize total traffic and vehicle speed through such hazards.

XV-3 The construction contractor will ensure that traffic safety hazards, such as uncovered or unfilled open trenches, will not be left in roadways during period of time when construction personnel are not present, such as nighttime and weekends.

XV-4 The construction contractor will repair all roads adequately after construction to ensure that traffic can move in the same manner as before construction.

XV-5 At all times during construction, the contractor will ensure that emergency fire, and police or medical vehicles are able to access all adjacent areas. Additionally, construction equipment or activities must not obstruct or hinder traffic that might be generated during an evacuation.

Chapter 5 PREPARERS

Initial Study

Tom Dodson and Associates
2150 Arrowhead Avenue
San Bernardino, CA 92405
(909) 882-3612

Tom Dodson
Joanna Crombie
Christine Camacho

Chapter 6 REFERENCES

Town of Apple Valley, 2009 General Plan and General Plan EIR

Carollo Engineers, “City of Hesperia WRP, Preliminary Design Report,” FINAL, December 2009

Carollo Engineers, “Hesperia Lift Station and Force Mains, Preliminary Design Report,” FINAL, December 2009

Carollo Engineers, “Town of Apple Valley WRP, Preliminary Design Report,” FINAL, December 2009

HDR, “Westside Water Reclamation Plant Phase III Design Summary,” March 1998

Pacific EcoRisk, “Mojave River Characterization Study: 2008 Bioassessment Monitoring,” June 2009

Pacific EcoRisk, “Mojave River Characterization Study: 2009 Bioassessment Monitoring,” December 2009

RBF Consulting, “VVWRA Flow Project Update,” Update 3 – April 2009

San Bernardino County 2008, General Plan and General Plan EIR

FIGURES

FIGURE 1
Regional Location

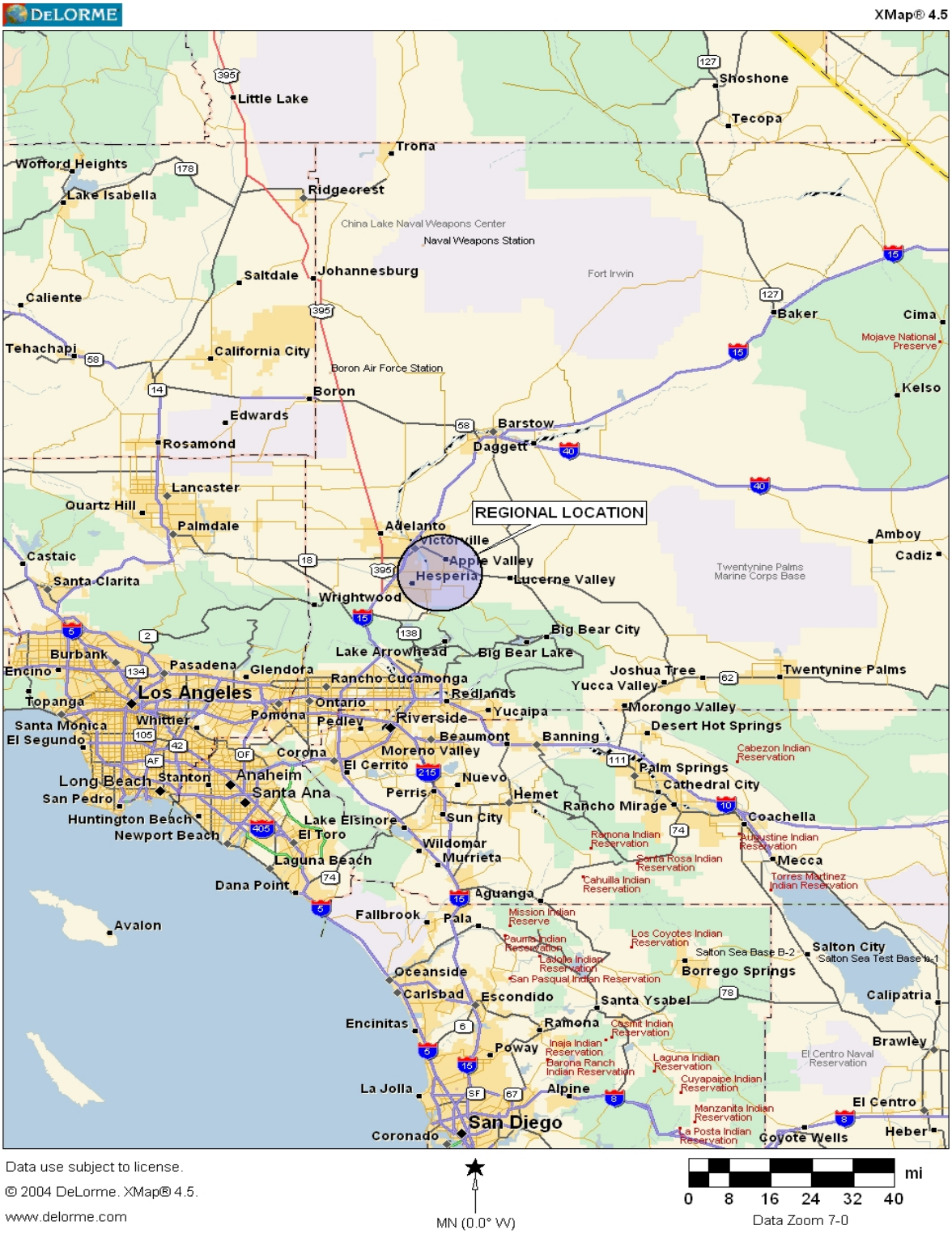

FIGURE 2
VVWRA Service Boundary

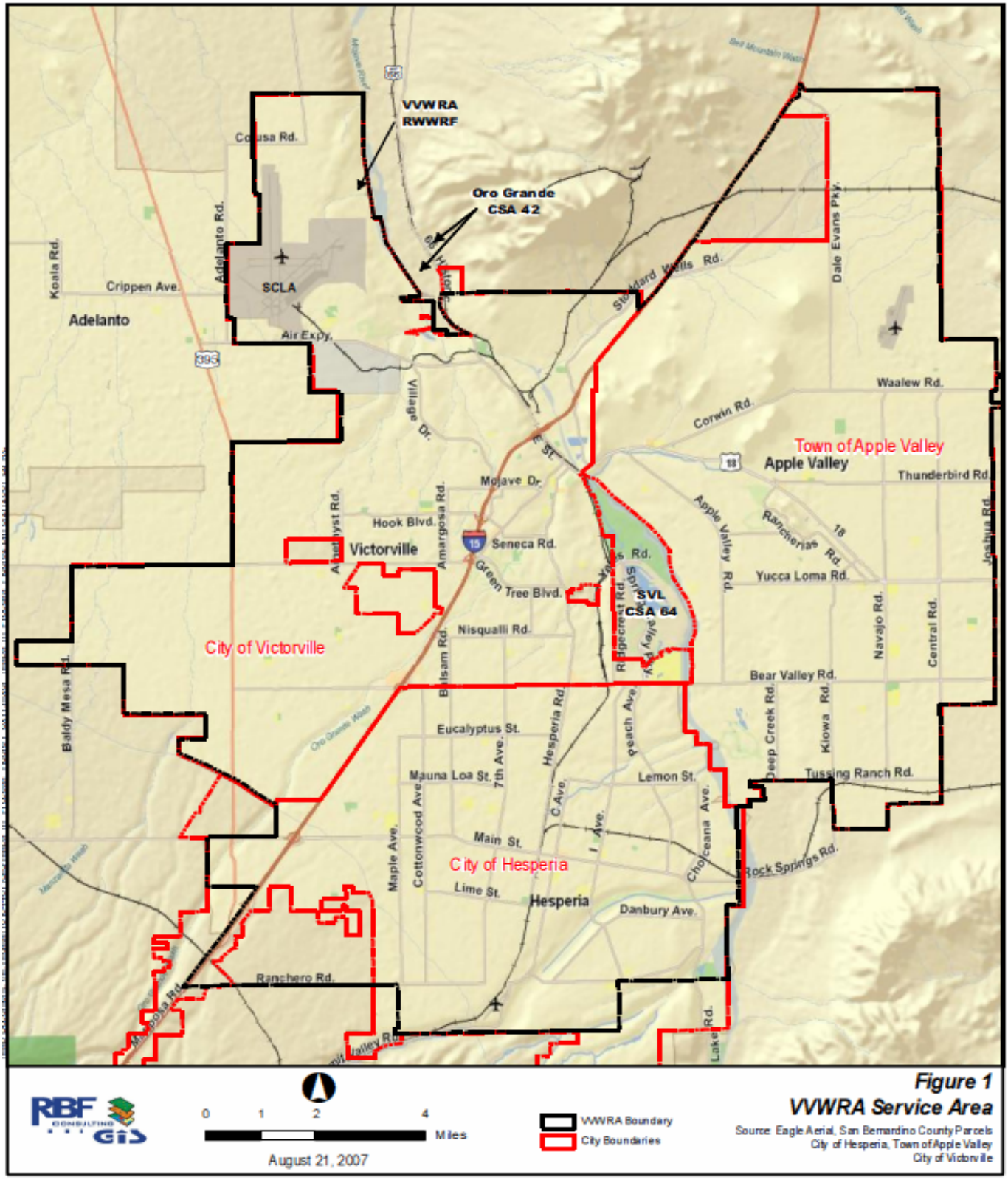

Source: RBF Consulting

FIGURE 3
Apple Valley WRP Facilities

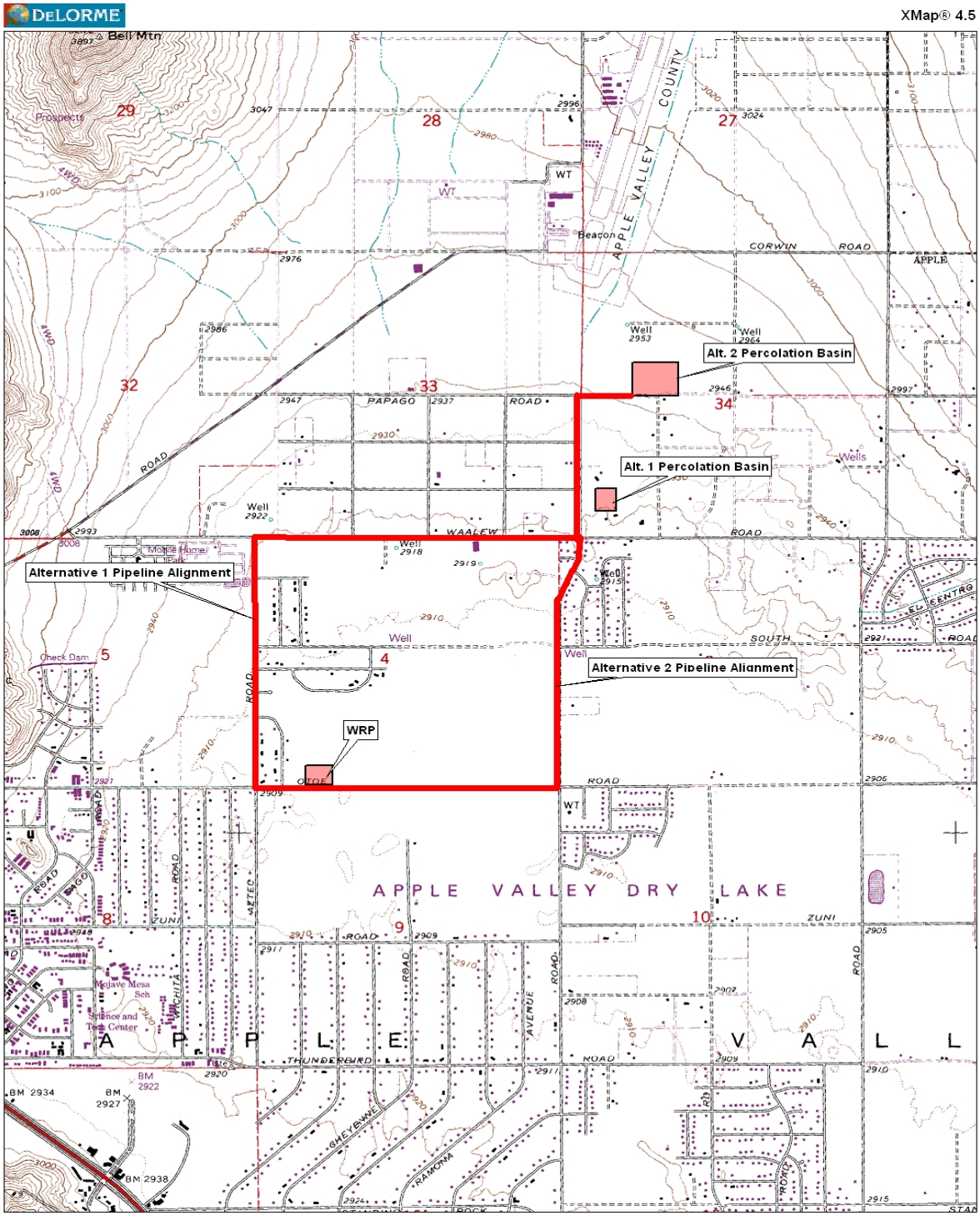

FIGURE 4
Apple Valley Water Reclamation Plant
Percolation Ponds Site – Alternatives 1 & 2

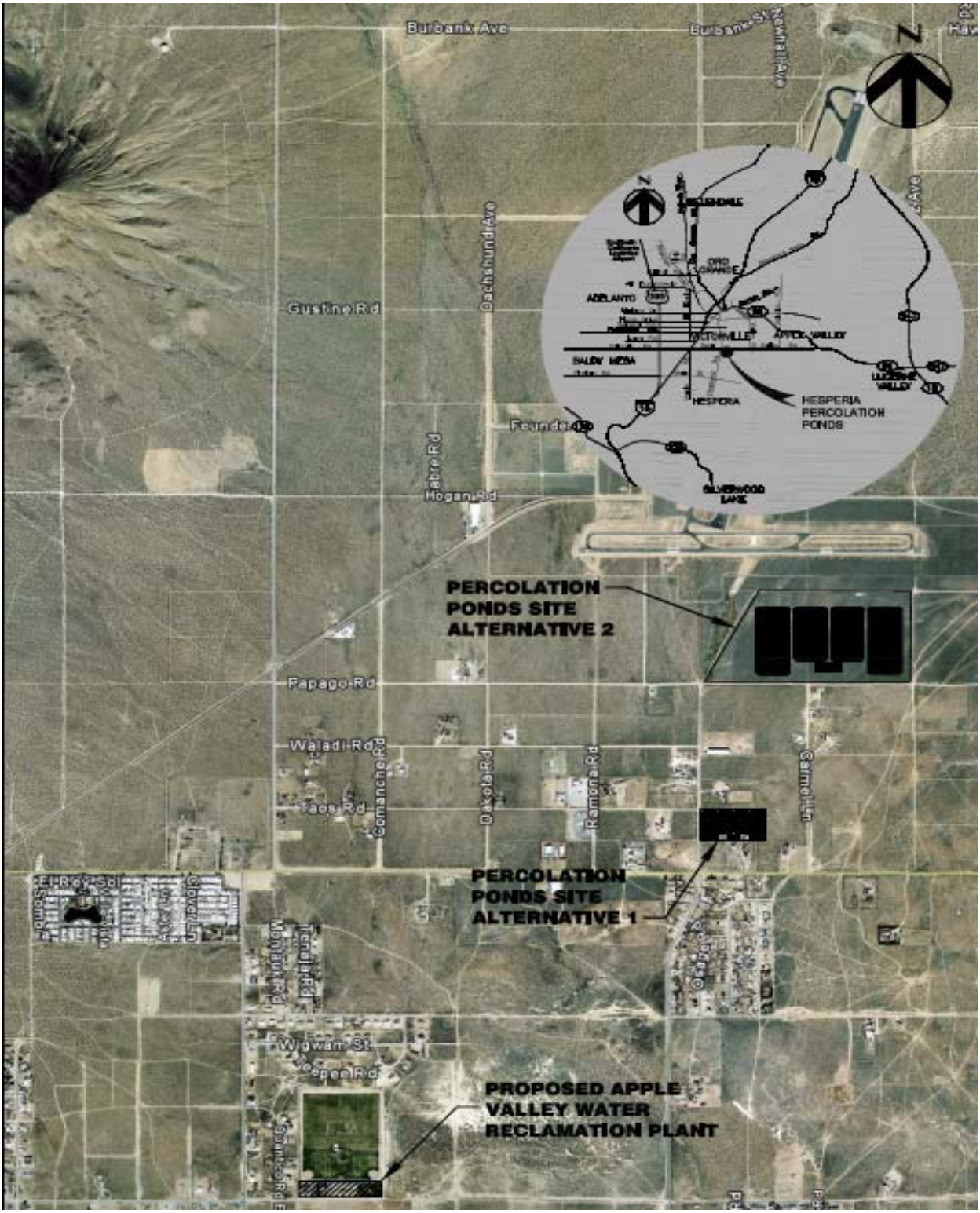

Source: Carollo Engineers, *Town of Apple Valley WRP PDR), December 2009*

FIGURE 5
Hesperia Lift Station and Force Main Alignment Alternatives

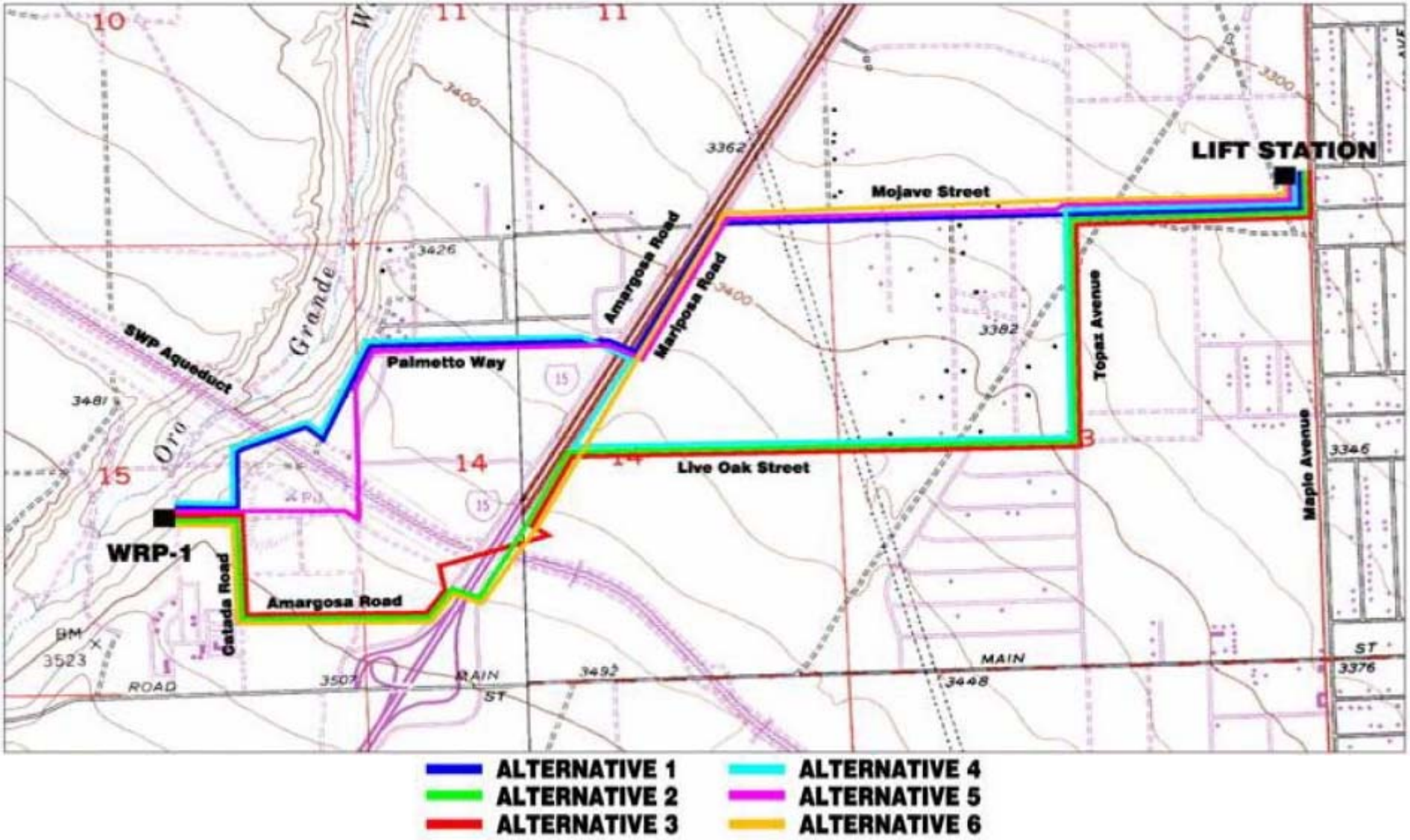

Source: Carollo / HDR, *City of Hesperia Lift Station and Force Main PDR, December 2009*

FIGURE 6
Alternative A – WRP West of Interstate Highway 15

Source: Carollo / HDR, *City of Hesperia Lift Station and Force Main PDR, December 2009*

FIGURE 7
Lift Station Location Map

Source: Carollo / HDR, *City of Hesperia Lift Station and Force Main PDR, December 2009*

FIGURE 8
Hesperia WRF Facility Sites

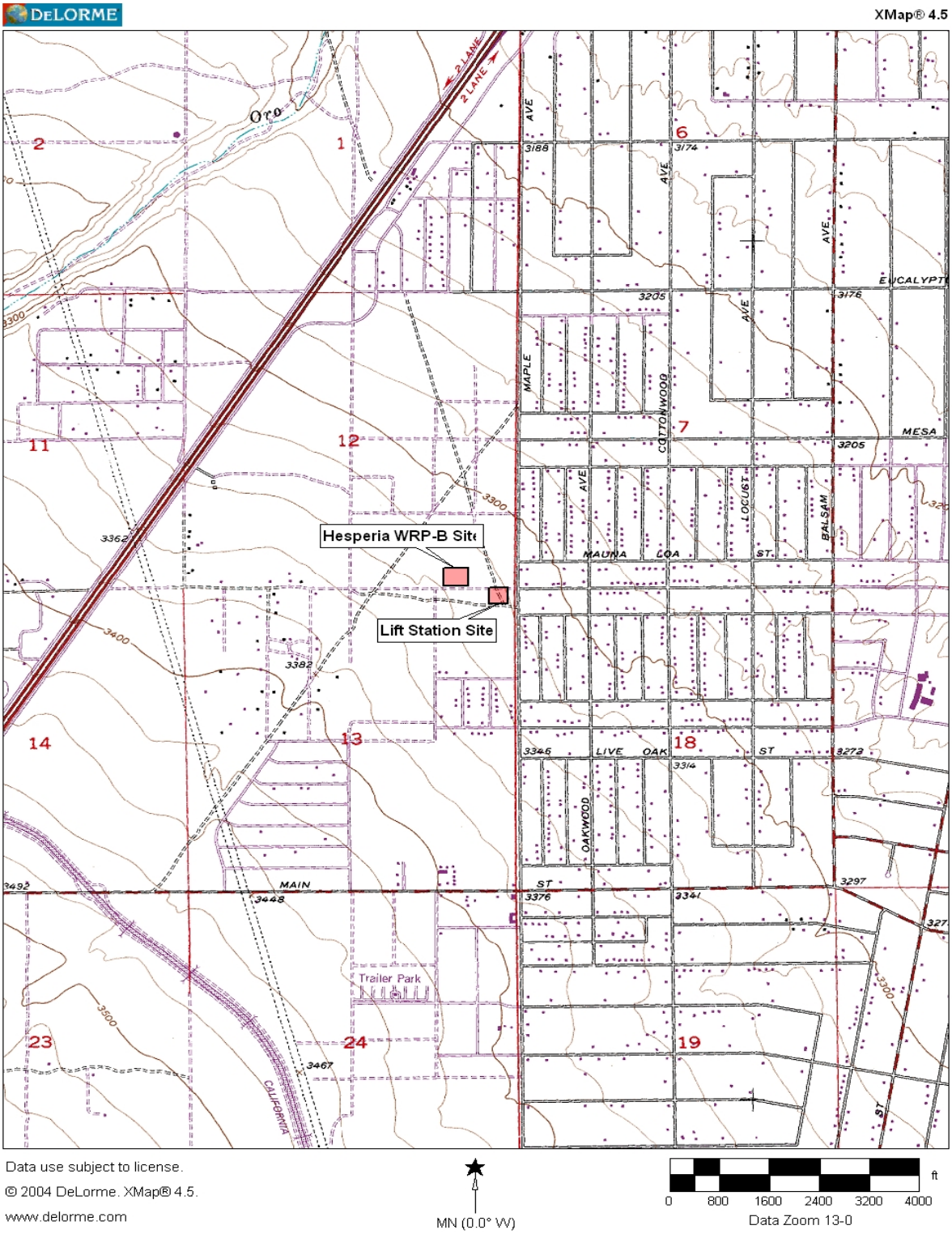

FIGURE 9
Overall Site Plan

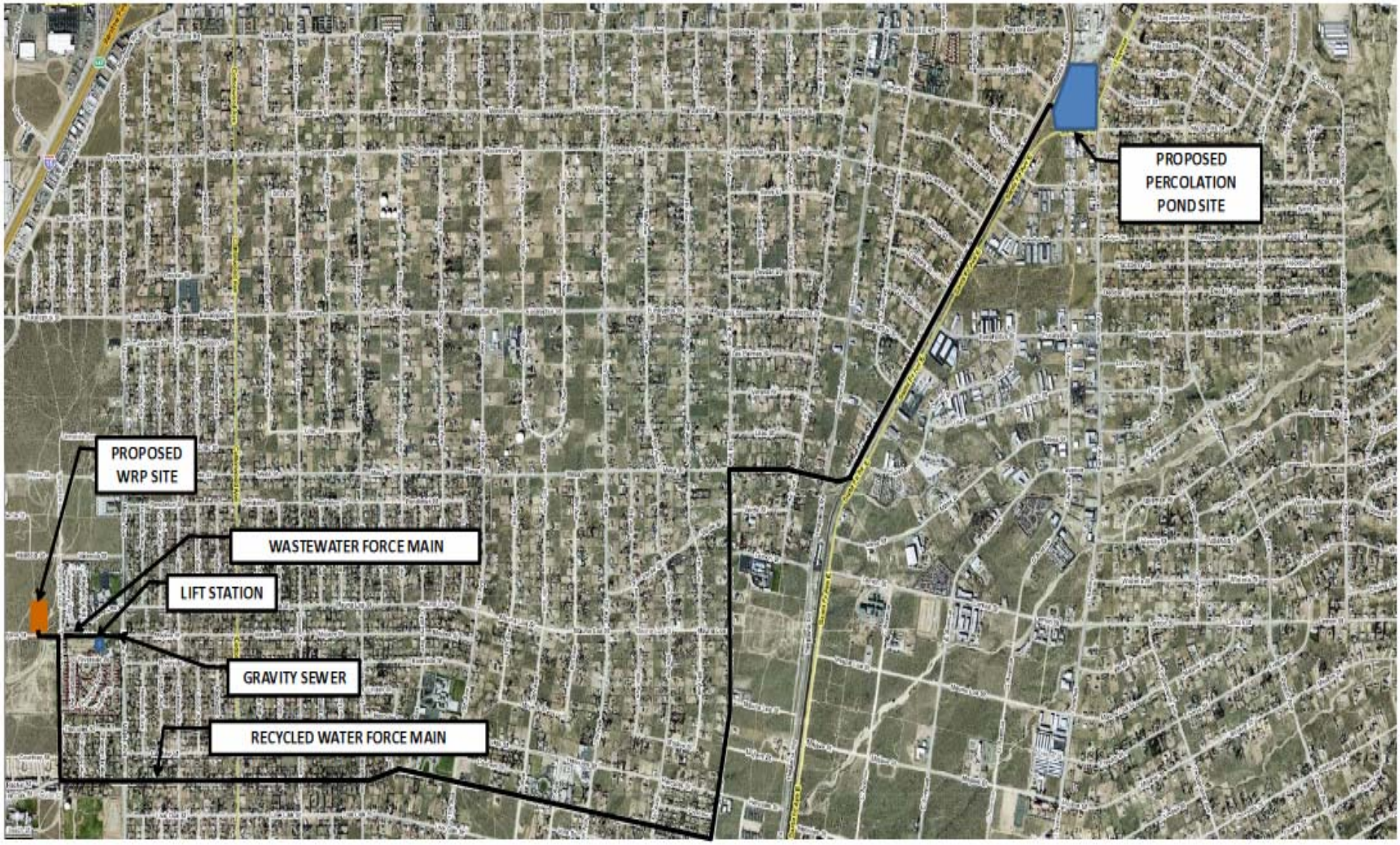

Source: Carollo / HDR, *City of Hesperia Lift Station and Force Main PDR, December 2009*

FIGURE 10
Eastside Regional WTTP Vicinity Map

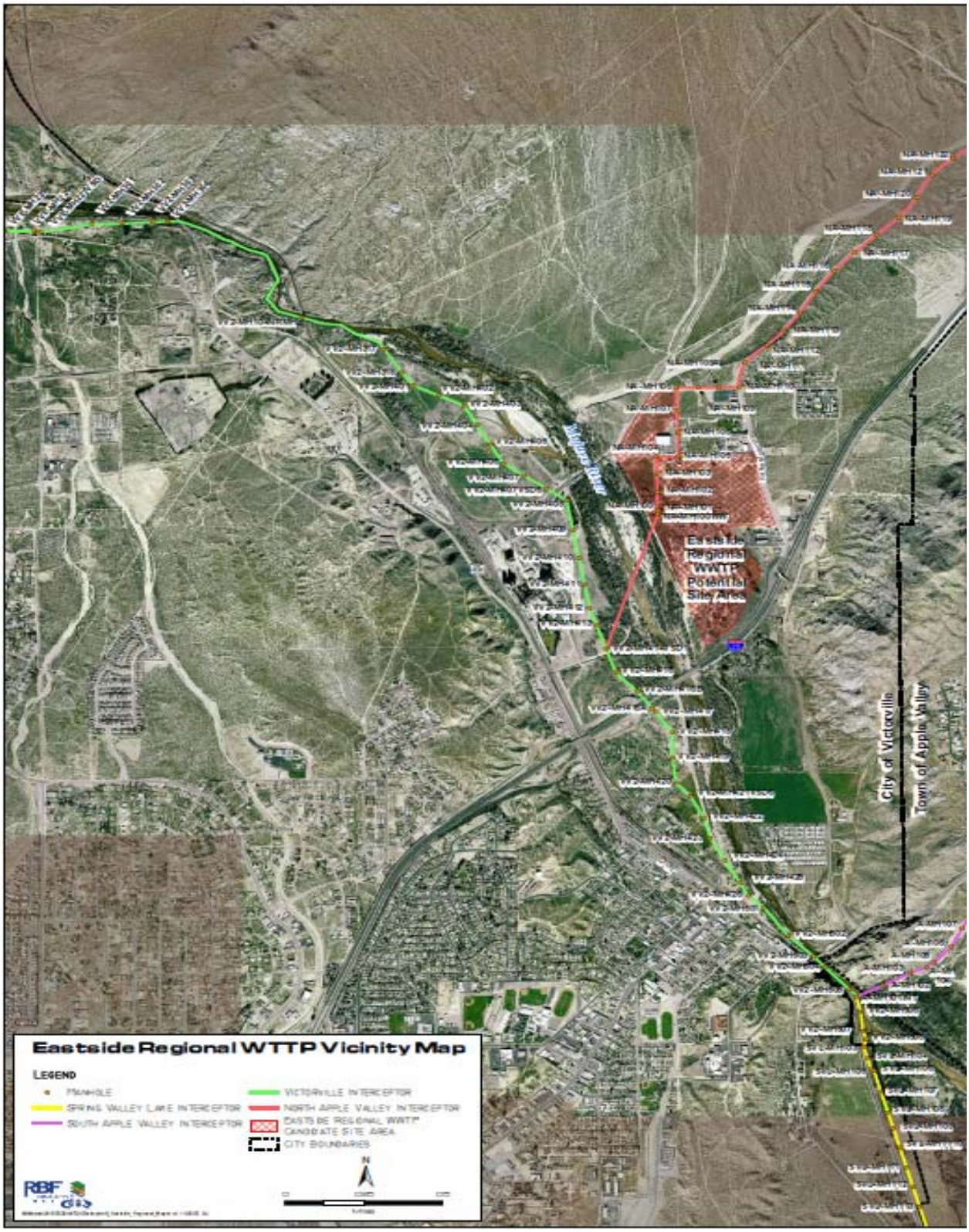

Source: *2009*

FIGURE 11
Eastside Regional WRP Potential Area

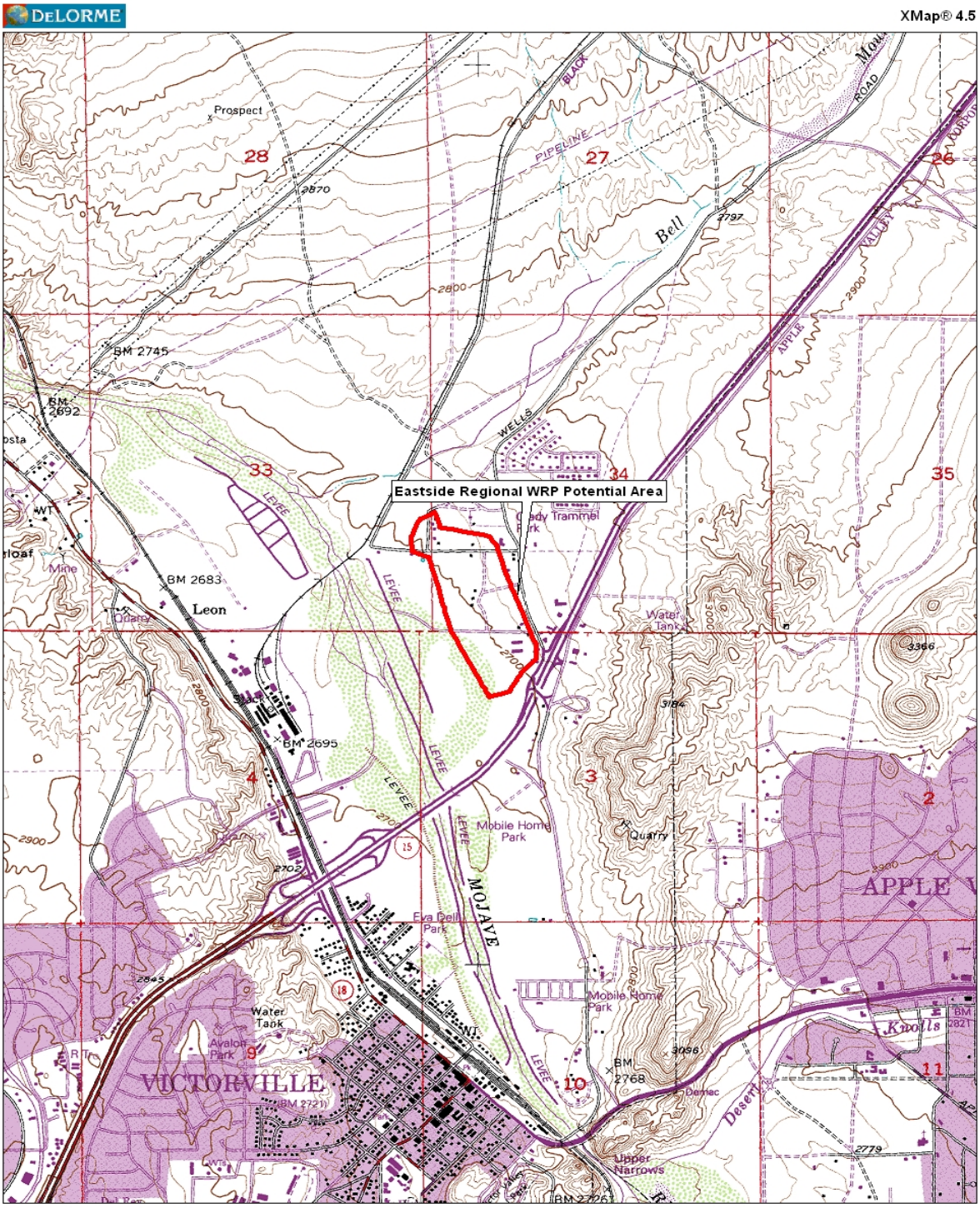

FIGURE 12
Site Layout

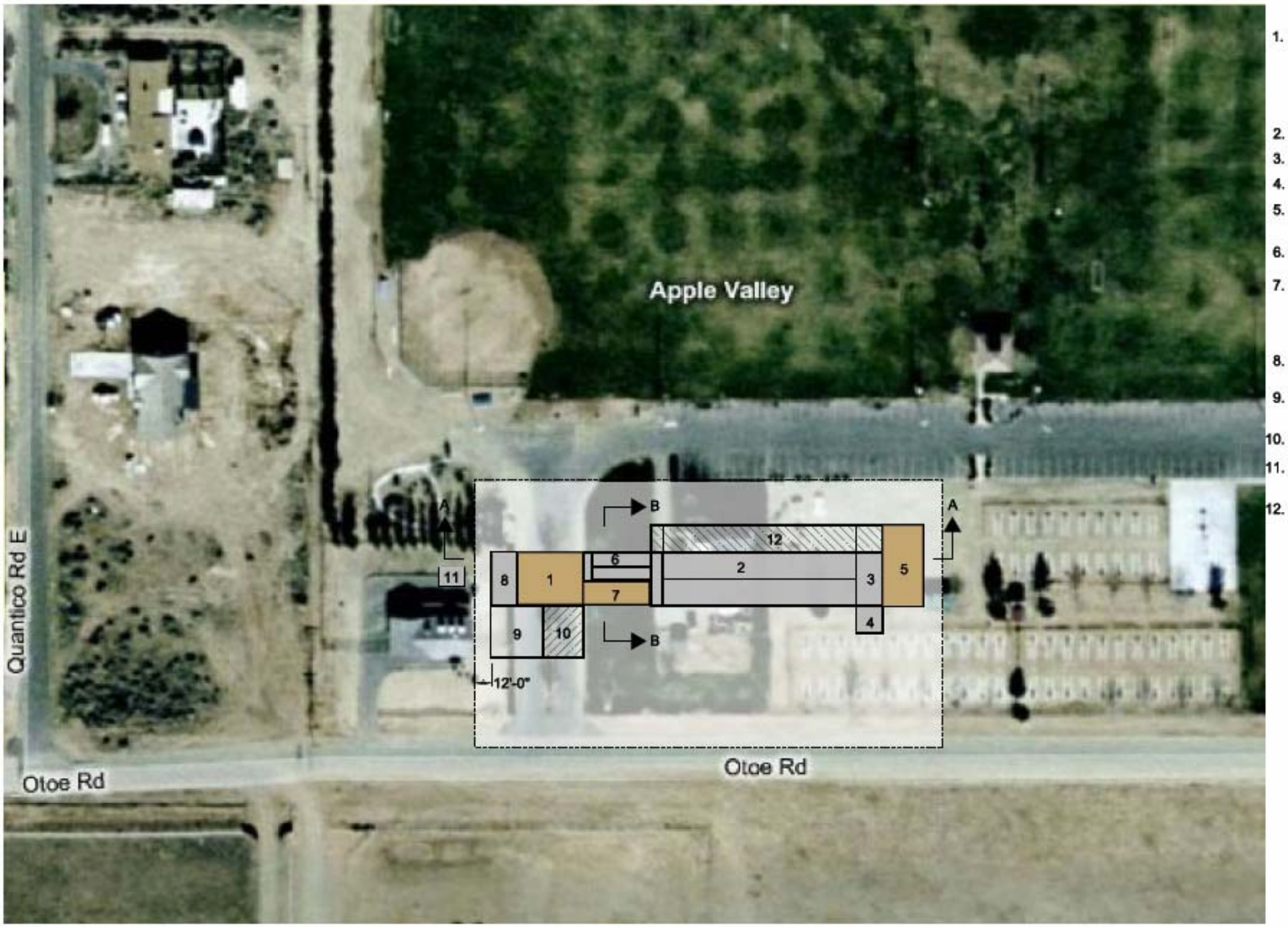

LEGEND

1. HEADWORKS/ MBR FACILITY BUILDING. FLOOR LEVEL: INFLUENT SCREENS, CITRIC ACID/ SODIUM HYPO STORAGE & FEED. LOWER LEVEL: UV SYSTEM & PERMEATE PUMPS
2. BIOLOGICAL BASIN
3. FEED FORWARD PUMP STATION
4. WAS PUMP STATION
5. PROCESS ELECTRICAL/ BLOWER BUILDING
6. SUBMERGED MEMBRANES
7. MBR ELECTRICAL/ BLOWER BUILDING FLOOR LEVEL: ELECTRICAL ROOM LOWER LEVEL: MEMBRANE AIR SCOUR BLOWERS
8. RECLAIMED WATER PUMP STATION
9. BIOFILTER (HEADWORKS ODOR CONTROL)
10. GRIT REMOVAL (FUTURE)
11. INFLUENT LIFT STATION EXPANSION
12. AERATION BASIN PHASE 2 EXPANSION (2 MGD)

Source: Carollo Engineers, *Town of Apple Valley WRP PDR, December 2009*

FIGURE 13
Process Flow Diagram

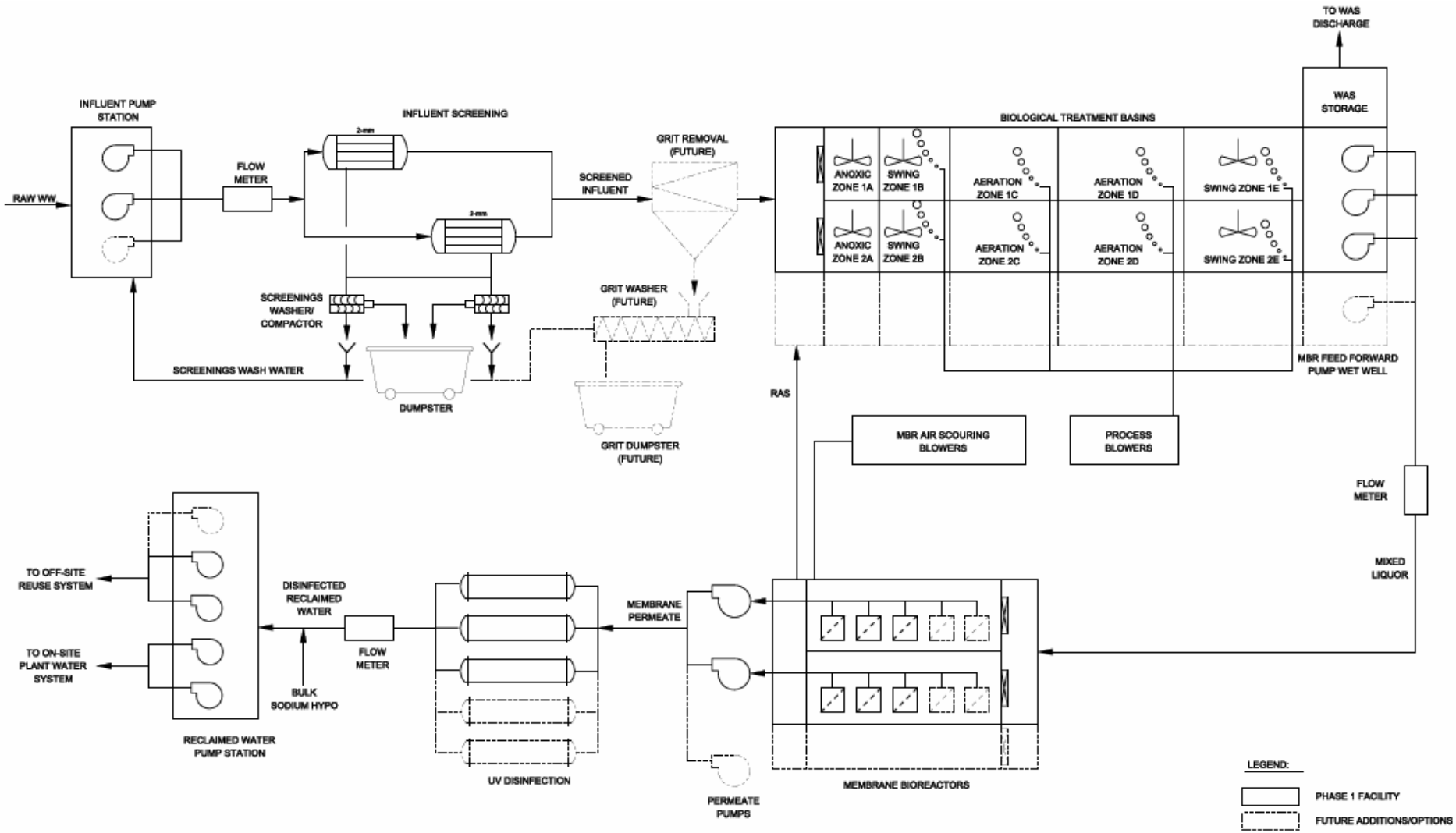

Source: Carollo Engineers, *Town of Apple Valley WRP PDR, December 2009*

FIGURE 14
Conceptual Architectural Elevations

Source: Carollo Engineers, *Town of Apple Valley WRP PDR, December 2009*

FIGURE 15
Site Layout

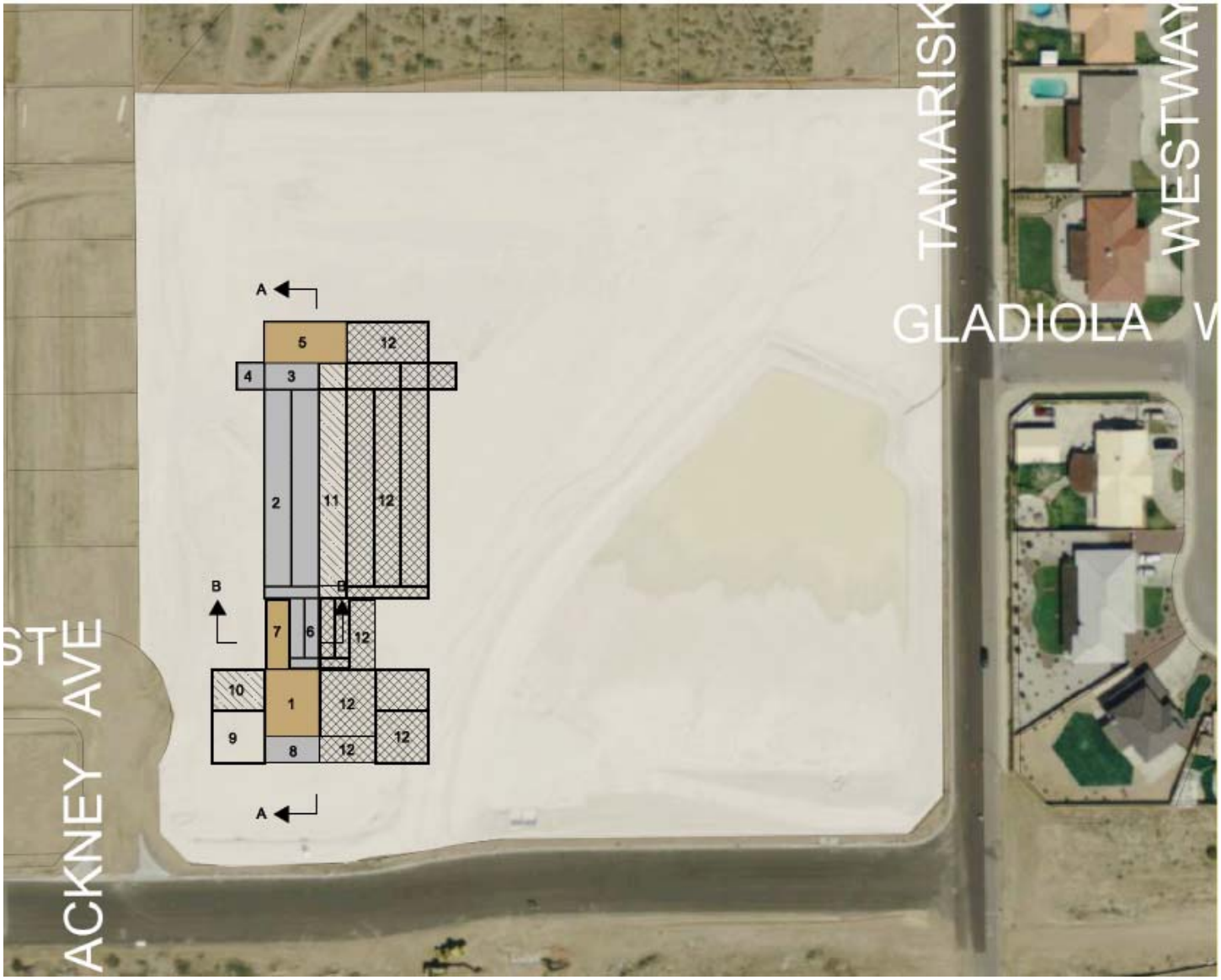

LEGEND

1. HEADWORKS/ MBR FACILITY BUILDING.
   FLOOR LEVEL: INFLUENT SCREENS, CITRIC ACID/ SODIUM HYPO STORAGE & FEED.
   LOWER LEVEL: UV SYSTEM & PERMEATE PUMPS
2. BIOLOGICAL BASIN
3. FEED FORWARD PUMP STATION
4. WAS PUMP STATION
5. PROCESS ELECTRICAL/ BLOWER BUILDING
6. SUBMERGED MEMBRANES
7. MBR ELECTRICAL/ BLOWER BUILDING
   FLOOR LEVEL: ELECTRICAL ROOM
   LOWER LEVEL: MEMBRANE AIR SCOUR BLOWERS
8. RECLAIMED WATER PUMP STATION
9. BIOFILTER (HEADWORKS ODOR CONTROL)
10. GRIT REMOVAL (FUTURE)
11. AERATION BASIN PHASE 2 EXPANSION (2 MGD)
12. PHASE 3 EXPANSION (4 MGD)

NORTH

Source: Carollo Engineers, *City of Hesperia WRP PDR, December 2009*

FIGURE 16
Process Flow Diagram

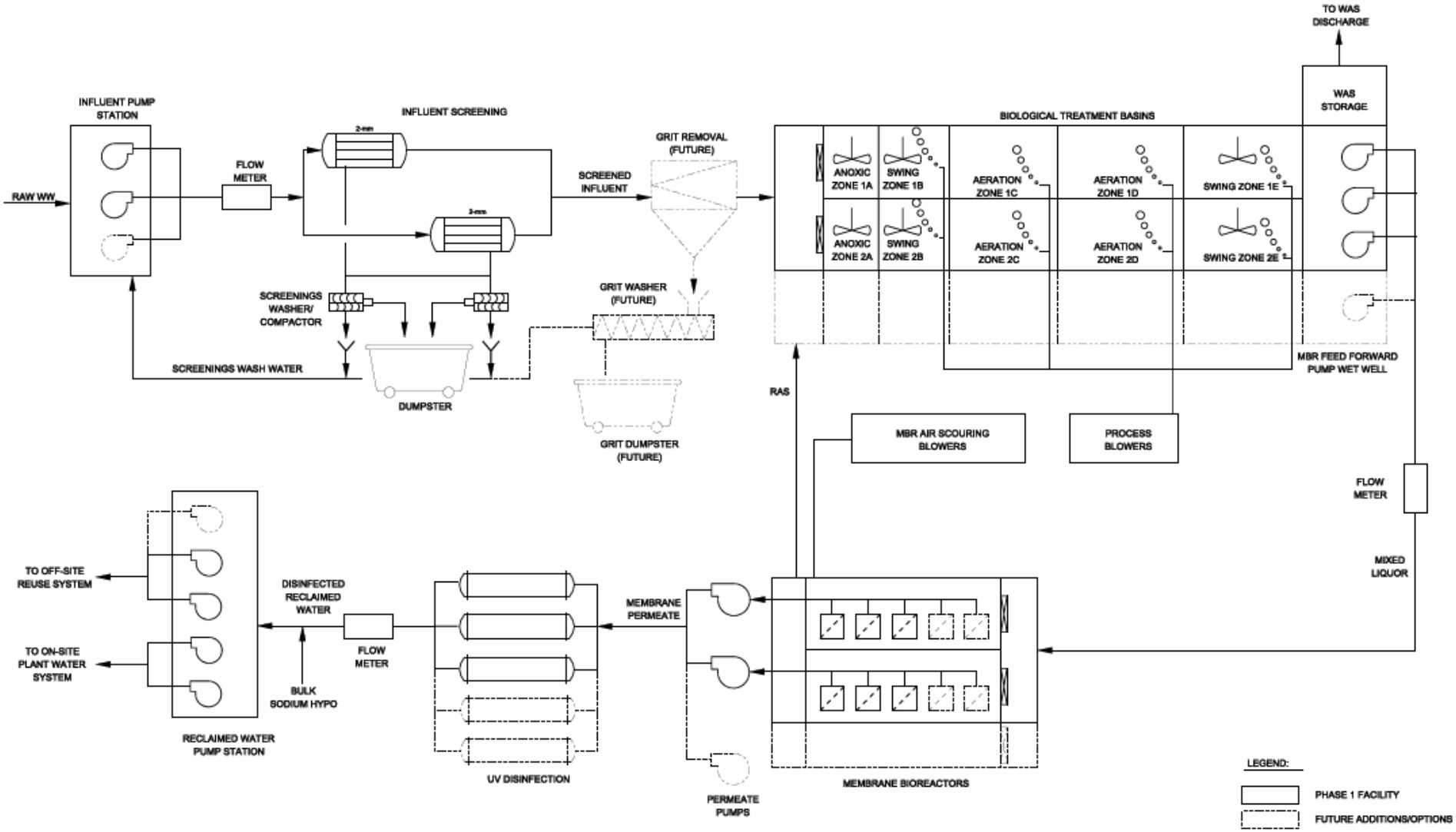

Source: Carollo Engineers, *City of Hesperia WRP PDR, December 2009*

FIGURE 17
Lift Station Site Plan

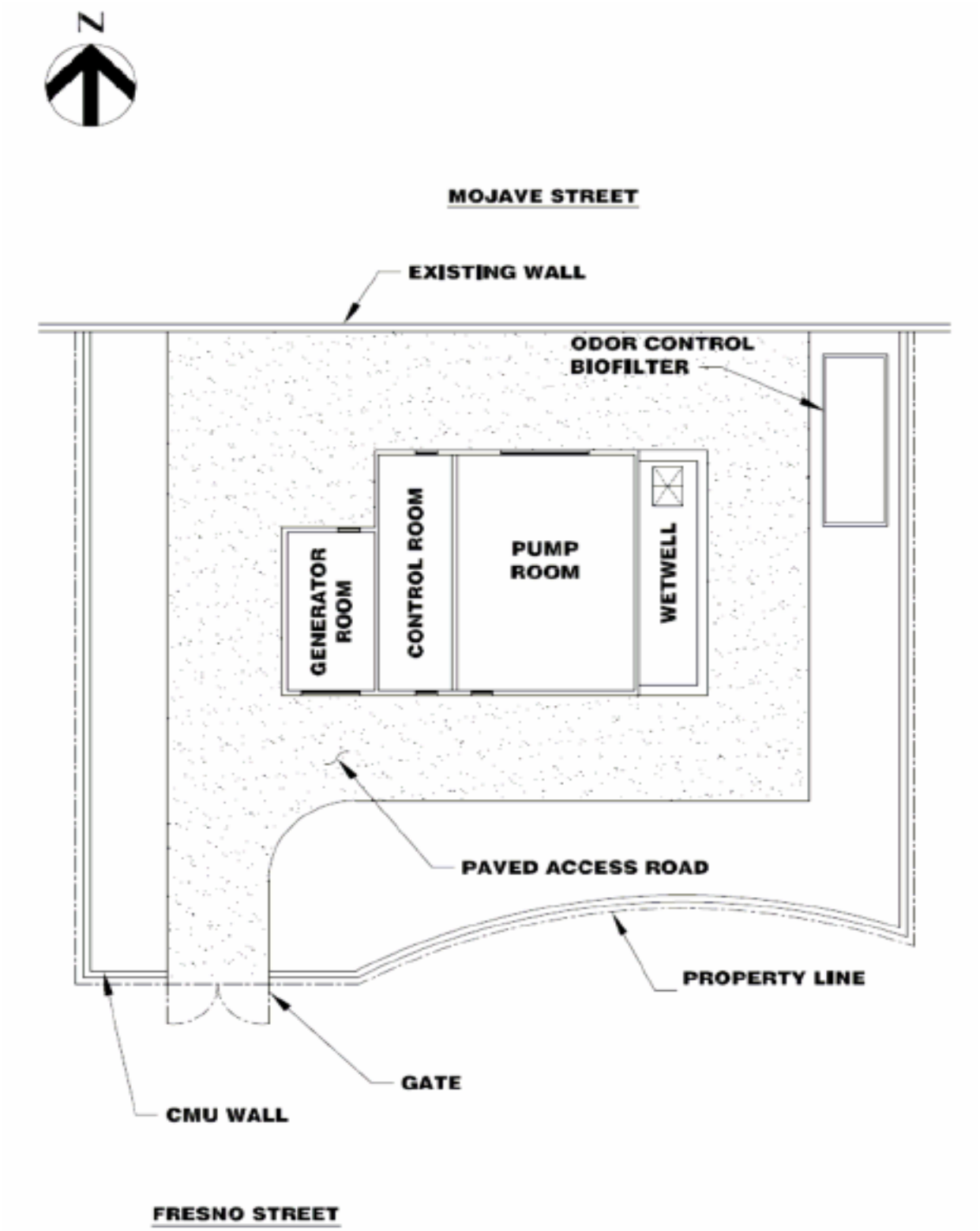

Source: Carollo / HDR, *City of Hesperia Lift Station and Force Main PDR, December 2009*

FIGURE 18
Hesperia Lift Station – Section 2

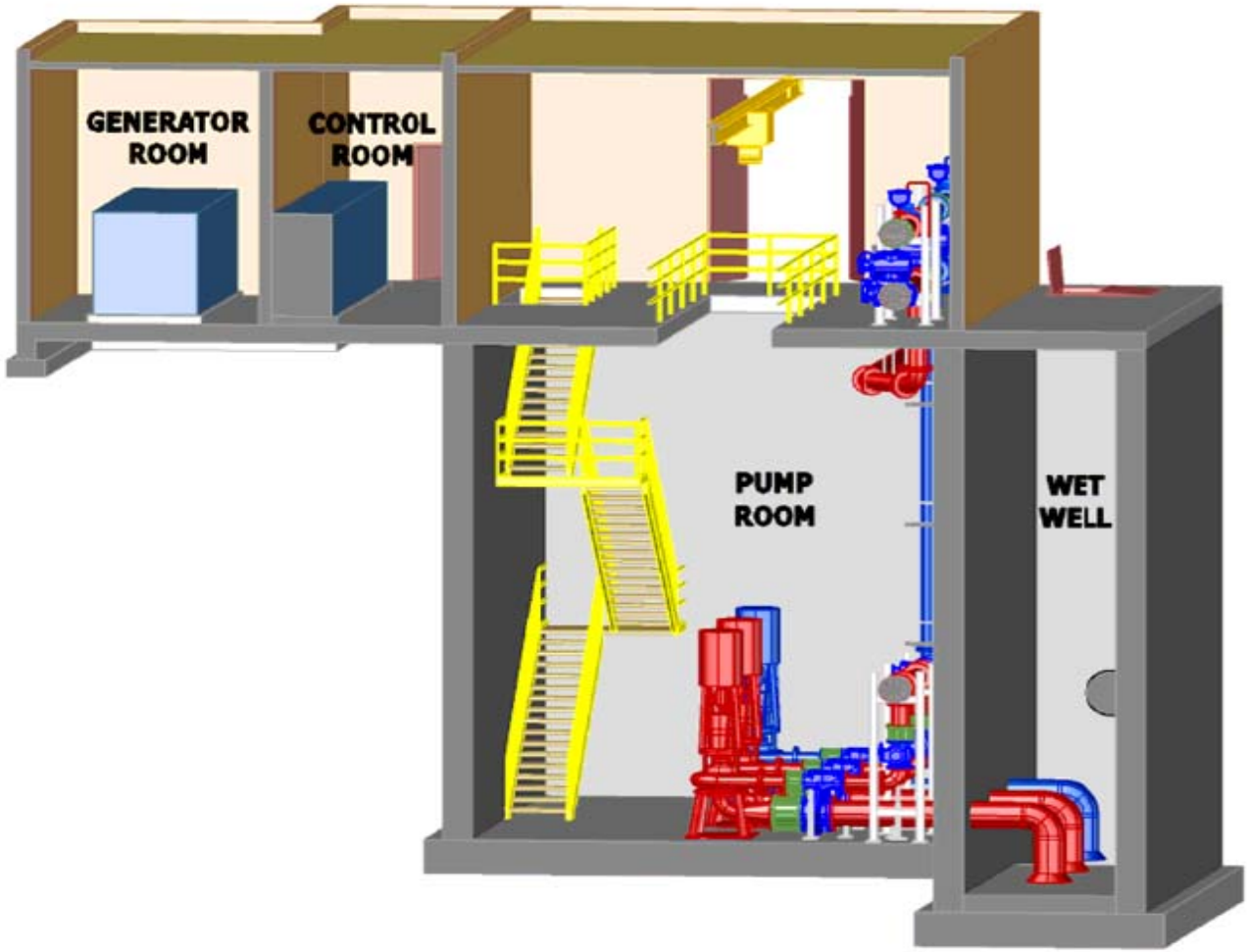

PHASE 1

PHASE 2

SECTION
NTS

Source: Carollo / HDR, *City of Hesperia Lift Station and Force Main PDR, December 2009*

APPENDIX 8.2

NOP MAILING LIST / NOP COMMENT LETTERS

OFFICE OF PLANNING & RESEARCH
STATE CLEARINGHOUSE
1400 TENTH STREET
SACRAMENTO CA 95814

(15 copies)

TOWN OF APPLE VALLEY
TOWN MANAGER
14955 DALE EVANS PARKWAY
APPLE VALLEY CA 92307

CITY OF HESPERIA
CITY MANAGER
15776 MAIN STREET
HESPERIA CA 92345

CITY OF VICTORVILLE
CITY MANAGER
PO BOX 5001
VICTORVILLE CA 92393-5001

CITY OF ADELANTO
CITY MANAGER
11600 AIR EXPRESSWAY
ADELANTO CA 92301

CITY OF BARSTOW
CITY MANAGER
220 EAST MOUNTAIN VIEW STREET
SUITE A
BARSTOW CA 92311

SAN BERNARDINO COUNTY
BOARD OF SUPERVISORS
SUPERVISOR BRAD MITZELFELT
385 NORTH ARROWHEAD AVE 5TH FLOOR
SAN BERNARDINO CA 92415-0110

APPLE VALLEY RANCHOS
WATER COMPANY
GENERAL MANAGER
21760 OTTAWA ROAD
APPLE VALLEY CA 92308

HELENDALE COMMUNITY
SERVICES DISTRICT
ENVIRONMENTAL REVIEW
PO BOX 2608
HELENDALE CA 92342-2608

CALIFORNIA RWQCB
LAHONTAN REGION
ENVIRONMENTAL REVIEW
14440 CIVIC DRIVE SUITE 200
VICTORVILLE CA 92392

CALIFORNIA DEPT OF FISH AND GAME
ENVIRONMENTAL REVIEW
3602 INLAND EMPIRE BLVD
SUITE C-220
ONTARIO CA 91764

CONGRESSMAN JERRY LEWIS
1150 BROOKSIDE AVENUE
SUITE J-5
REDLANDS CA 92373

MOJAVE WATER AGENCY
GENERAL MANAGER
22450 HEADQUARTERS DRIVE
APPLE VALLEY CA 92307

US FISH AND WILDLIFE SERVICE
ENVIRONMENTAL REVIEW
6010 HIDDEN VALLEY ROAD
CARLSBAD CA 92009

US BUREAU OF RECLAMATION
DOUG MCPHERSON
27708 JEFFERSON AVENUE SUITE 202
TEMECULA CA 92590

VICTOR VALLEY WASTEWATER
RECLAMATION AUTHORITY
LOGAN OLDS
15776 MAIN STREET SUITE 3
HESPERIA CA 92345

JIM HAGSTROM P.E.
CAROLLO ENGINEERS
10540 TALBERT AVENUE SUITE 200 EAST
FOUNTAIN VALLEY CA 92708

Comment Letter #1

STATE OF CALIFORNIA

GOVERNOR'S OFFICE *of* PLANNING AND RESEARCH

STATE CLEARINGHOUSE AND PLANNING UNIT

ARNOLD SCHWARZENEGGER
GOVERNOR

CYNTHIA BRYANT
DIRECTOR

Notice of Preparation

May 27, 2010

To: Reviewing Agencies

Re: Victor Valley Wastewater Reclamation Authority: Town of Apple Valley Wastewater Reclamation Plant, City of Hesperia Wastewater Reclamation Plant, and Related
SCH# 2010051087

Attached for your review and comment is the Notice of Preparation (NOP) for the Victor Valley Wastewater Reclamation Authority: Town of Apple Valley Wastewater Reclamation Plant, City of Hesperia Wastewater Reclamation Plant, and Related draft Environmental Impact Report (EIR).

Responsible agencies must transmit their comments on the scope and content of the NOP, focusing on specific information related to their own statutory responsibility, within 30 days of receipt of the NOP from the Lead Agency. This is a courtesy notice provided by the State Clearinghouse with a reminder for you to comment in a
1-1 timely manner. We encourage other agencies to also respond to this notice and express their concerns early in the environmental review process.

Please direct your comments to:

Logan Olds
Victor Valley Wastewater Reclamation Authority
15776 Main Street, Suite 3
Hesperia, CA 92345

with a copy to the State Clearinghouse in the Office of Planning and Research. Please refer to the SCH number noted above in all correspondence concerning this project.

If you have any questions about the environmental document review process, please call the State Clearinghouse at (916) 445-0613.

Sincerely,

for Scott Morgan
Acting Director, State Clearinghouse

Attachments
cc: Lead Agency

Document Details Report
State Clearinghouse Data Base

SCH# 2010051087
Project Title Victor Valley Wastewater Reclamation Authority: Town of Apple Valley Wastewater Reclamation Plant, City of Hesperia Wastewater Reclamation Plant, and Related
Lead Agency Victor Valley Wastewater Reclamation Authority

Type NOP Notice of Preparation

Description The Victor Valley Wastewater Reclamation Authority (VVWRA) will serve as the Lead Agency under the California Environmental Quality Act (CEQA) and will coordinate the preparation of an Environmental Impact Report (EIR) that will evaluate the potential significant environmental impacts that may result from constructing and operating two subregional wastewater reclamation facilities: Town of Apple Valley Wastewater Reclamation Plant, City of Hesperia Wastewater Reclamation Plant (WRP), and Related Facilities. The wastewater would be treated to meet Title 22 standards and the recycled water produced from the two proposed WRPs could be used for landscape irrigation, industrial operations and recharge to the regional aquifer in the Alto Subbasin of the Mojave River Basin. Public scoping meetings are scheduled as follows: Apple Valley, June 15 and 17, 2010 at Vista Campana Middle School, adjacent to the Town Hall; and Hesperia June 22 and 24, 2010 at the VVWRA Board Room, 15776 Main Street, Hesperia. Meetings are scheduled from 6:30 pm to 7:30 pm at all locations.

Lead Agency Contact

Name Logan Olds
Agency Victor Valley Wastewater Reclamation Authority
Phone 760-948-9849 **Fax**
email
Address 15776 Main Street, Suite 3
City Hesperia **State** CA **Zip** 92345

Project Location

County San Bernardino
City Apple Valley, Hesperia
Region
Cross Streets Bear Valley Road / Hesperia Road / I-15
Lat / Long 34° 28' 15" N / 117° 15' 25" W
Parcel No.
Township 4-6N **Range** 3,4W **Section** many **Base** SBB&M

Proximity to:

Highways I-15
Airports Apple Valley Airport
Railways BNSF
Waterways Mojave River
Schools several
Land Use

Project Issues Aesthetic/Visual; Agricultural Land; Air Quality; Archaeologic-Historic; Biological Resources; Drainage/Absorption; Flood Plain/Flooding; Forest Land/Fire Hazard; Geologic/Seismic; Minerals; Noise; Population/Housing Balance; Public Services; Recreation/Parks; Soil Erosion/Compaction/Grading; Toxic/Hazardous; Traffic/Circulation; Vegetation; Water Quality; Water Supply; Wetland/Riparian; Wildlife; Growth Inducing

---

Reviewing Agencies Resources Agency; Office of Historic Preservation; Department of Parks and Recreation; Department of Water Resources; Department of Fish and Game, Region 6; CA Department of Public Health; Native American Heritage Commission; Caltrans, Division of Aeronautics; California Highway Patrol; Caltrans, District 8; State Water Resources Control Board, Divison of Financial Assistance; Regional Water Quality Control Bd., Region 6 (Victorville)

Note: Blanks in data fields result from insufficient information provided by lead agency.

Document Details Report
State Clearinghouse Data Base

Date Received 05/27/2010 ***Start of Review*** 05/27/2010 ***End of Review*** 06/25/2010

Note: Blanks in data fields result from insufficient information provided by lead agency.

Comment Letter #2

State Water Resources Control Board

Linda S. Adams
Secretary for Environmental Protection

Division of Financial Assistance
1001 I Street • Sacramento, California 95814 • (916) 341-5700 FAX (916) 341-5707
Mailing Address: P.O. Box 944212 • Sacramento, California • 94244-2120
Internet Address: http://www.waterboards.ca.gov

Arnold Schwarzenegger
Governor

JUN 15 2010

Mr. Logan Olds
Victor Valley Wastewater Reclamation Authority
15776 Main Street, Suite 3
Hesperia, CA 92345

Dear Mr. Olds:

NOTICE OF PREPARATION (NOP) OF AN ENVIRONMENTAL IMPACT REPORT (EIR) FOR VICTOR VALLEY WASTEWATER RECLAMATION AUTHORITY (AUTHORITY); TOWN OF APPLE VALLEY WASTEWATER RECLAMATION PLANT, CITY OF HESPERIA WASTEWATER PLANT, AND RELATED (PROJECT); STATE CLEARINGHOUSE NO. 2010051087

2-1 We understand the Authority is pursuing Clean Water State Revolving Fund (CWSRF) financing for this Project (CWSRF No. C-06-4806-110 for Town of Apple Valley Wastewater Reclamation Plant, and C-06-4807-110 for City of Hesperia Wastewater Plant). As a funding agency and a state agency with jurisdiction by law to preserve, enhance, and restore the quality of California's water resources, the State Water Resources Control Board (State Water Board) is providing the following information for the California Environmental Quality Act (CEQA) document prepared for the Project.

2-2 We would appreciate notice of any hearings or meetings held regarding the environmental review of the Project, and look forward to receiving the final EIR. Following the Authority's CEQA process, please provide the following documents applicable to the Project: (1) Two copies of the draft and final EIR, (2) the resolution certifying the EIR, adopting the Mitigation Monitoring and Reporting Program (MMRP), and making CEQA findings, (3) all comments received during the review period and the Authority's response to those comments, and (4) a date stamped copy of the Notice of Determination filed with the Governor's Office of Planning and Research.

2-3 The CWSRF Program is partially funded by the United States Environmental Protection Agency (USEPA) and requires additional "CEQA-Plus" environmental documentation and review. Four information sheets are included that further explain the environmental review process and additional federal requirements in the CWSRF Program. In addition, an environmental evaluation form is included for the Authority to submit should it pursue State Water Board funding. The State Water Board can consult directly with agencies responsible for implementing federal environmental laws and regulations. Any environmental issues raised by federal agencies or their representatives will need to be resolved prior to State Water Board approval of a CWSRF financing commitment. For further information on the CWSRF Program environmental compliance please contact Ms. Michelle Lobo at (916) 341-6983.

2-4 It is important to note that prior to a CWSRF financing commitment, projects are subject to the provisions of the Federal Endangered Species Act and must obtain approval from the United States Fish and Wildlife Service (USFWS), and/or National Marine Fisheries Service (NMFS) for any potential effects to special status species. Please be advised that the State Water Board can consult with the USFWS, and/or NMFS on behalf of the Authority regarding all federal special status species the Project has the potential to impact if the Project is to be funded under the CWSRF Program.

2-5 In addition, CWSRF projects must comply with federal laws pertaining to cultural resources, specifically Section 106 of the National Historic Preservation Act. The State Water Board has been delegated responsibility for carrying out the requirements of Section 106 under a Nationwide Programmatic Agreement executed for the CWSRF Program by the USEPA, the Advisory Council on Historic Preservation, and the National Conference of State Historic Preservation Officers.

As stated above, the State Water Board has responsibility for ensuring compliance with Section 106 and the State Water Board Cultural Resources Officer (CRO) consults directly with the California State Historic Preservation Officer (SHPO). SHPO consultation is initiated when sufficient information is provided by the CWSRF applicant for projects having potential impacts to cultural resources. Please contact the State Water Board CRO Ms. Cookie Hirn at 916-341-5690, to find out more about the requirements and questions on how to begin the Section 106 compliance process. Note that the Authority will need to identify the Area of Potential Effects (APE), including construction areas, staging areas, and depth of any excavation.

2-6 If the Authority pursues State Water Board funding, provide the CRO with a copy of a current Records Search for the Project area, including maps that show all recorded sites and surveys in relation to the APE for the Project. The APE is three-dimensional and includes all areas that may be affected by the Project. The APE includes the surface area and extends below ground to the depth of any Project excavations. The Records Search request should be made for an area larger than the APE. The appropriate area varies for different projects but should be drawn large enough to provide information on what types of sites may exist in the vicinity. Specifically, please send copies of the Records Search maps with all sites and surveys mapped in relation to the pipeline routes, and copies of Native American consultation including documentation of follow-up phone calls. Additionally, the Project archeologist will need to provide the CRO with two copies of the Cultural Resources Studies prepared for the Project.

Native American and Interested Party Consultation is required for Section 106 compliance:

- A Project description and map should be sent to the Native American Heritage Commission (NAHC). The NAHC will provide a list of Native American tribes and individuals that are culturally affiliated with your Project area and recommend that they all be contacted
- A Project description and map should be sent to everyone on the list provided by the NAHC, asking for information on the Project area
- Similar letters should be sent to local historical organizations
- Follow-up contact should be made by phone, if possible, and a phone log should be included

JUN 1 5 2010

Comments from the NAHC, local tribes, and historical organizations affiliated with the Project area, as well as the Authority's response to these comments should be included in the submittal to the CRO.

The NAHC can be contacted at:

915 Capitol Mall, Room 364
Sacramento, CA 95814
(916) 653-4082

The State Water Board has no further comments on the NOP at this time and we look forward to reviewing the draft EIR. Thank you once again for the opportunity to review the Authority's environmental document. If you have any questions or concerns, please feel free to contact me
2-7 at (916) 327-9401, or contact Ms. Justine Herrig at (916) 327-9117.

Sincerely,

Lisa Lee
Environmental Scientist

Enclosures (5)

cc: State Clearinghouse
(Re: SCH# 2010051087)
P. O. Box 3044
Sacramento, CA 95812-3044

INSTRUCTIONS AND GUIDANCE FOR
"ENVIRONMENTAL COMPLIANCE INFORMATION"

Introduction:

Detailed information, including statutes and guidelines on the California Environmental Quality Act (CEQA), can be obtained at http://ceres.ca.gov/ceqa. A CEQA Process Flowchart that shows interaction points between lead and responsible agencies can be found at http://ceres.ca.gov/topic/env_law/ceqa/flowchart/index.html. In addition, State Water Board environmental staff is available to answer questions about the CEQA process. Please contact your assigned Project Manager to be directed to an appropriate environmental staff person for further clarification.

CEQA Checklist:

All projects coming to the State Water Board for funding are considered "projects" under CEQA because the State Water Board is providing discretionary approval for that funding.

The types of CEQA documents that might apply to an applicant's project include one of the following: 1. Notice of Exemption; 2. Initial Study/Negative Declaration (or Mitigated Negative Declaration with a Mitigation Monitoring and Reporting Program [MMRP]); or 3. Environmental Impact Report (EIR) with an MMRP. The applicant must determine the appropriate document for its project and submit the additional supporting information listed under the applicable section of the CEQA Checklist. Please submit two copies of all documents. If the applicant is using a CEQA document that is older than five years, the applicant must re-evaluate environmental and project conditions, and develop and submit an updated document based on the results of that re-evaluation.

The applicant must ensure the CEQA document is specific to the project for which funding is being requested. Tier I CEQA documents, such as Program or Master Plan EIRs, may not be suitable for satisfying State Water Board requirements if these documents are not project-specific. Instead, the applicant should be submitting a Tier II CEQA document that is project-specific. If this Tier II CEQA document references pertinent environmental and mitigation information contained in the Tier I CEQA document, then the applicant must submit both documents. *[NOTE: Tier I and Tier II documents refer to documents as defined under CEQA. Although the same terminology is used, these documents do not relate to the Tier I and Tier II level of reviews under the CWSRF Program.]*

Each applicant, if it is a public agency, is responsible for approving the CEQA documents it uses regardless of whether or not it is a lead agency under CEQA. Non-profit organizations, however, shall only be responsible for approving the applicable project mitigation measures identified in the MMRP. For purposes of State Water Board funding, all public agencies applying for this funding shall file either a Notice of Exemption or a Notice of Determination with the Governor's Office of Planning and Research (State Clearinghouse). Stamped copies of these notices shall be submitted with the rest of the environmental documents.

If the CEQA document is linked to a National Environmental Policy Act (NEPA) document (such as an Environmental Assessment or an Environmental Impact Statement), then the applicant shall submit the additional corresponding NEPA items with either a Finding of No Significant Impact, or a Record of Decision made by the lead agency under NEPA.

Note that additional information may be requested from the applicant after review of all the environmental documents to ensure the State Water Board can complete its own CEQA compliance.

Federal Information:

CEQA requires full disclosure of all aspects of the project, including impacts and mitigation measures that are not only regulated by state agencies, but also by federal agencies. Early consultation with state and federal agencies in the CEQA process will assist in minimizing changes to the project when funding is being requested from the State Water Board. For the items that follow the CEQA Checklist, the applicant shall provide the information and/or reference any applicable sections from the documents being submitted to assist with environmental staff's CEQA review, as well as to provide applicant guidance on any potential concerns, and to assist with federal coordination as needed.

1. Federal Endangered Species Act (ESA), Section 7:

For further information on the federal ESA relating to law, regulation, policy, and notices, go to http://www.fws.gov/endangered/policy/index.html and http://www.nmfs.noaa.gov/pr/laws/esa/. Note that compliance with both state and federal ESA is required of projects having the potential to impact special status species. Although overlap exists between the federal and state ESAs, there might be additional or more restrictive state requirements. For further information on the state ESA, go to http://www.dfg.ca.gov/habcon/cesa/.

2. National Historic Preservation Act, Section 106:

The NHPA focuses on federal compliance. In addition, CEQA requires that impacts to cultural and historic resources be analyzed. The "CEQA and Archeological Resources" section from the Governor's Office of Planning and Research CEQA Technical Advice Series states that the lead agency obtains a current records search from the appropriate California Historical Resources File System Information Center. In addition, the Native American Heritage Commission (NAHC) will provide a list of Native American tribes to be contacted and that are culturally affiliated with a project area.

The NAHC can be contacted at:

915 Capitol Mall, Room 364
Sacramento, CA 95814
(916) 653-4082

3. Clean Air Act:

For CWSRF financed projects, we recommend including a general conformity section in the CEQA documents so that another public review process will not be needed, should a conformity determination be required. The applicant should check with its air quality management district and review the State Air Resources Board California air emissions map for information on the State Implementation Plan. For information on the analysis steps involved in evaluating conformity, please contact the environmental staff person through the assigned Project Manager.

4. Coastal Zone Management Act:

For affected areas, refer to http://coastalmanagement.noaa.gov/mystate/docs/StateCZBoundaries.pdf. For additional information please refer to http://www.coastal.ca.gov/ccatc.html and/or http://www.bcdc.ca.gov/.

5. Farmland Protection Policy Act:

The Natural Resources Conservation Service provides information on the Farmland Protection Policy Act at http://www.nrcs.usda.gov/programs/fppa. Please see the following website regarding the Williamson Act http://www.consrv.ca.gov/dlrp/lca.

6. Floodplain Management - Executive Order 11988:

Each agency shall provide leadership and take action to reduce the risk of flood loss, to minimize the impact of floods on human safety, health and welfare, and to restore and preserve the natural and beneficial values served by floodplains in carrying out its responsibilities. Before taking an action, each agency shall determine whether the proposed action will occur in a floodplain. The generally established standard for risk is the flooding level that is expected to occur every 100 years. If an agency has determined to, or proposes to, conduct, support, or allow an action to be located in a floodplain. The agency shall consider alternatives to avoid adverse effects and incompatible development in the floodplains. For further information, please consult the following web link: http://www.epa.gov/owow/wetlands/regs/eo11988.html.

7. Migratory Bird Treaty Act (MBTA):

The MBTA, along with subsequent amendments to this Act, provides legal protection for almost all breeding bird species occurring in the United States and must be addressed in CEQA. The MBTA restricts the killing, taking, collecting and selling or purchasing of native bird species or their parts, nests, or eggs. The treaty allows hunting of certain game bird species, for specific periods, as determined by federal and state governments. In the CEQA document, each agency must make a finding that a project will comply with the MBTA. For further information, please consult the following web link: http://www.fws.gov/laws/lawsdigest/migtrea.html.

8. Protection of Wetlands – Executive Order 11990:

Projects, regardless of funding, must get approval for any temporary or permanent disturbance to federal and state waters, wetlands, and vernal pools. The permitting process is usually through the

U.S. Army Corps of Engineers (USACOE), can be lengthy and may ultimately require project alterations to avoid wetlands. Applicants must consult with USACOE early in the planning process if any portion of the project site contains wetlands, or other federal waters. The USACOE Wetland Delineation Manual is available at: http://www.wetlands.com/regs/tlpge02e.htm. Also note that the Water Boards are involved in providing approvals through a 401 Water Quality Certification and/or Waste Discharge Requirements (http://www.waterboards.ca.gov/water_issues/programs/cwa401/index.shtml).

9. Wild and Scenic Rivers Act:

There are construction restrictions or prohibitions for projects near or on a "wild and scenic river." A listing of designated "wild and scenic rivers" can be obtained at http://www.rivers.gov/wildriverslist.html . Watershed information can be obtained through the "Watershed Browser" at: http://cwp.resources.ca.gov/map_tools.php.

10. Source Water Protection:

For more information, please visit: http://epa.gov/region09/water/groundwater/ssa.html.

CALIFORNIA ENVIRONMENTAL QUALITY ACT (CEQA)
CHECKLIST FOR THE APPLICANT
What to Submit to your State Water Board's Project Manager

If project is covered under a **CEQA Categorical or Statutory Exemption**, submit a copy of the following:

- ❑ **Notice of Exemption (filed with the Governor's Office of Planning and Research)**
- ❑ **List of Best Management Practices (BMPs) and their locations, if project implements BMPs**
- ❑ **Map of the project area**

If project is covered under a **Negative Declaration**, submit a copy of the following:

- ❑ **Draft and Final Initial Study/Negative Declaration**
  (or Mitigated Negative Declaration, if applicable)
  - ❑ Comments and Responses to the Draft
  - ❑ Mitigation Monitoring and Reporting Program (if using a Mitigated Negative Declaration)
- ❑ **Resolution approving the CEQA documents**
  - ❑ Adopting the Negative Declaration
  - ❑ Making CEQA Findings
- ❑ **Notice of Determination (filed with the Governor's Office of Planning and Research)**

If project is covered under an **Environmental Impact Report (EIR)**, submit a copy of the following:

- ❑ **Draft and Final EIR**
  - ❑ Comments and Responses to the Draft
  - ❑ Mitigation Monitoring and Reporting Program (MMRP)
- ❑ **Resolution approving the CEQA documents**
  - ❑ Certifying the EIR and adopting the MMRP
  - ❑ Making CEQA Findings
  - ❑ Adopting a Statement of Overriding Considerations for any adverse impact(s) that cannot be avoided or fully mitigated if project is implemented
- ❑ **Notice of Determination (filed with the Governor's Office of Planning and Research)**

If EIR is a joint CEQA/National Environmental Policy Act document (EIR/Environmental Impact Statement or EIR/Environmental Assessment), submit the applicable Record of Decision and/or Finding of No Significant Impact.

State Water Resources Control Board (State Water Board)
Clean Water State Revolving Fund Program

Evaluation Form for Environmental Review and Federal Coordination

1. **Federal Endangered Species Act:**
Does the project involve any direct effects from construction activities, or indirect effects such as growth inducement that may affect federally listed threatened or endangered species that are known, or have a potential, to occur on-site, in the surrounding area, or in the service area?

☐ No. Discuss why the project will not impact any federally listed special status species:

_____
_____
_____
_____
_____
_____

☐ Yes. Include information on federally listed species that could potentially be affected by this project and any proposed avoidance and compensation measures so that the State Water Board can initiate informal/formal consultation with the applicable federally designated agency. Document any previous ESA consultations that may have occurred with the project.

Attach project-level biological surveys, evaluations analyzing the project's direct and indirect effects on special-status species, and a current species list for the project area.

2. **National Historic Preservation Act:**
Identify the Area of Potential Effects (APE), including construction, staging areas, and depth of any excavation. (Note that the APE is three dimensional and includes all areas that may be affected by the project, including the surface area and extending below ground to the depth of any project excavations.)

_____
_____
_____
_____
_____
_____
_____
_____

Attach a current records search with maps showing all sites and surveys drawn in relation to the project area, and records of Native American consultation.

3. **<u>Clean Air Act:</u> Is the project subject to a State Implementation Plan (SIP) conformity determination?**

☐ No. The project is in an attainment or unclassified area.

☐ Yes. The project is in a nonattainment area or attainment area subject to maintenance plans. Include information to indicate the nonattainment designation (e.g. moderate, serious or severe), if applicable. If estimated emissions (below) are above the federal de minimis levels, but the project is sized to meet only the needs of current population projections that are used in the approved SIP for air quality, then quantitatively indicate how the proposed capacity increase was calculated using population projections.

Air Basin Name: _____

Provide the estimated project construction and operational air emissions (in tons per year) in the chart below, and attach supporting calculations.

Attach any air quality studies that may have been done for the project.

Pollutant	Status (Attainment, Nonattainment or Unclassified)	Threshold of Significance for the Area (if applicable)	Construction Emissions (Tons/Year)	Operation Emissions (Tons/Year)
Carbon Monoxide (CO)				
Ozone (O_3)				
Oxides of Nitrogen (NO_x)				
Particulate Matter ($PM_{2.5}$)				
Particulate Matter (PM_{10})				
Reactive Organic Gases (ROG)				
Sulfur Dioxide (SO_2)				
Volatile Organic Compounds (VOC)				

4. **<u>Coastal Zone Management Act:</u>**
Is any portion of the project site located within the coastal zone?

☐ No. The project is not within the coastal zone.

☐ Yes. Describe the project location with respect to coastal areas, and the status of the coastal zone permit:

_____
_____
_____
_____
_____
_____

5. **Farmland Protection Policy Act:**
Is any portion of the project site located on important farmland?

☐ No. The project will not impact farmland.

☐ Yes. Include information on the acreage that would be converted from important farmland to other uses. Indicate if any portion of the project site is located within Williamson Act control and the amount of affected acreage:

_____
_____
_____
_____
_____
_____

6. **Flood Plain Management:**
Is any portion of the project site located within a 100-year floodplain as depicted on a floodplain map or otherwise designated by the Federal Emergency Management Agency?

☐ No. Provide a description of the project location with respect to streams and potential floodplains:

_____
_____
_____

☐ Yes. Describe the floodplain, and include a floodplain map and a floodplains/wetlands assessment. Describe any measures and/or project design modifications that would minimize or avoid flood damage by the project:

_____
_____
_____
_____

7. **Migratory Bird Treaty Act:**
Will the project affect protected migratory birds that are known, or have a potential, to occur on-site, in the surrounding area, or in the service area?

☐No.

☐Yes. Discuss the impacts (such as noise and vibration impacts, modification of habitat) to migratory birds that may be directly or indirectly affected by the project and mitigation measures to reduce or eliminate these impacts. Include a list of all migratory birds that could occur where the project is located:

_____
_____
_____

8. **Protection of Wetlands:**
Does any portion of the project area contain areas that should be evaluated for wetland delineation or require a permit from the U.S. Army Corps of Engineers?

☐ No. Provide the basis for such a determination:

_____
_____
_____

☐ Yes. Describe the impacts to wetlands, potential wetland areas, and other surface waters, and the avoidance, minimization, and mitigation measures to reduce such impacts. Provide the status of the permit and information on permit requirements:

_____
_____
_____
_____
_____
_____

9. **Wild and Scenic Rivers Act:**
Is any portion of the project located within a wild and scenic river?

☐ No. The project will not impact a wild and scenic river.

☐ Yes. Identify the wild and scenic river watershed and project location relative to the affected wild and scenic river:

_____
_____
_____
_____
_____
_____

Identify watershed where the project is located:_____

10. **Source Water Protection:**
Is the project located in an area designated by the U.S. Environmental Protection Agency, Region 9, as a Sole Source Aquifer?

☐ No. The project is not within the boundaries of a sole source aquifer.

☐ Yes. Identify the aquifer (e.g., Santa Margarita Aquifer, Scott's Valley, the Fresno County Aquifer, the Campo/Cottonwood Creek Aquifer or the Ocotillo-Coyote Wells Aquifer):

_____

BASIC CRITERIA FOR CULTURAL RESOURCES REPORTS

FOR SECTION 106 CONSULTATION WITH THE STATE HISTORIC PRESERVATION OFFICER (SHPO) UNDER THE NATIONAL HISTORIC PRESERVATION ACT (NHPA)

CURRENT RECORDS SEARCH INFORMATION

- A current (less than a year old) records search from the appropriate Information Center is necessary. The records search must include maps that show all recorded sites and surveys in relation to the area of potential effects (APE) for the project.

- The APE is three-dimensional and includes all areas that may be affected by the project. The APE includes the surface area and extends below ground to the depth of any project excavations.

- The records search request should be made for an area larger than the APE. The appropriate area varies for different projects but must be drawn large enough to provide information on what types of sites may exist in the vicinity.

NATIVE AMERICAN AND INTERESTED PARTY CONSULTATION

- Native American and interested party consultation should be initiated at the beginning of any cultural resource investigations. The purpose is to gather information from people with local knowledge that may be used to guide research.

- A project description and map should be sent to the Native American Heritage Commission (NAHC) when the applicant requests a check of their Sacred Lands Files. The Sacred Lands Files include religious and cultural places that are not recorded at the information centers.

- The NAHC will include a list of Native American groups and individuals with their response. A project description and maps must be sent to everyone on the list asking for information on the project area.

- Similar letters should be sent to local historical organizations and other interested parties.

- Follow-up contact should be made by phone, if possible, and a contact log must be included in the report.

REPORT TERMINOLOGY

- A cultural resources report used for Section 106 consultation should use terminology consistent with the NHPA.

- Being consistent with the NHPA does not mean that the report needs to be "filled" with passages and interpretations of the regulations; the SHPO reviewer already knows the law.

- If "findings" are made, they must be one of the four "findings" listed in Section 106. These include:

  "No historic properties affected" (no properties are within the APE, including the below ground APE).

  "No effect to historic properties" (properties may be near the APE but the project will not impact them).

  "No adverse effect to historic properties" (the project may affect historic properties but the impacts will not be adverse).

  "Adverse effect to historic properties." *Note: the SHPO must be consulted at this point. If your consultant proceeds on his/her own, his/her efforts may be wasted.*

WARNING PHRASES IN ALREADY PREPARED CEQA REPORTS

- A finding of **"no known resources"** does not mean anything. The consultant's job is to find out if there are resources within the APE or to explain why they are not present.

- **"The area is sensitive for buried archaeological resources,"** followed by a statement that **"monitoring is recommended as mitigation."** Monitoring is not acceptable mitigation. A reasonable effort should be made to find out if buried resources are present in the APE.

- **"The area is already disturbed by previous construction."** This statement may be true, but documentation is still needed to show that the new project will not affect cultural resources. As an example, an existing road can be protecting a buried archaeological site. Or, previous construction may have impacted an archaeological site that was never documented.

- No mention of **"Section 106."** A report that gives adequate information for compliance with the California Environmental Quality Act may not be sufficient to comply with Section 106.

Please contact Ms. Cookie Hirn with any questions on cultural resources reports.

Cookie Hirn
State Water Resources Control Board
Cultural Resources Officer
916-341-5690
Mhirn@waterboards.ca.gov

Comment Letter #3

DEPARTMENT OF TRANSPORTATION
DISTRICT 8
PLANNING AND LOCAL ASSISTANCE (MS 722)
464 WEST 4th STREET, 6th FLOOR
SAN BERNARDINO, CA 92401-1400
PHONE (909) 383-4557
FAX (909) 383-5936
TTY (909) 383-6300

Flex your power!
Be energy efficient!

RECEIVED
JUN 17 2009
VVWRA

June 15, 2010

Mr. Logan Olds
Victor Valley Wastewater Reclamation Authority
15776 Main Street, Suite 3
Hesperia, CA 92345

Dear Mr. Olds:

Notice of Preparation (NOP) for the Victor Valley Wastewater Reclamation Authority: Town of Apple Valley Wastewater Reclamation Plant, City of Hesperia Wastewater Reclamation Plant, and related Draft Environmental Impact Report.
SCH #: 2010051087
08-SBD-15-PM 34.85

3-1 The California Department of Transportation (Caltrans) has reviewed the materials provided for our review for the above referenced project. The following comments are for your consideration.

We concurred with the findings in the Design Information Memorandum No. 6C for Alternative A Wastewater Reclamation Plant (WRP) west of Interstate 15 (I-15) found in the Preliminary Design Report for the City of Hesperia, Lift Station and Force Main. This alternative requires pipeline to cross Interstate 15 as described on Page 6C-2, Design Constraints.

Issuance of a Caltrans Encroachment Permits will be required prior to any construction within State R/W. In addition, all work undertaken within I-15 R/W shall be in compliance to all current design standards, applicable policies, and construction practices. Detailed information regarding permit application and submittal requirements is available at:

Office of Encroachment Permits
California Department of Transportation
464 West Fourth Street, 6th Floor, MS 619
San Bernardino, CA 92401-1400
(909) 383-4526

3-2 These comments are based upon a review of the material provided for our evaluation. If this proposal is later revised in any way, please forward appropriate project information to this Office so that updated recommendations for impact mitigation may be provided.

3-3 We appreciate the opportunity to offer our comments concerning this project. If you have any questions regarding this letter, please contact David Lee at 909-383-6908 or me at 909-383-4557.

Sincerely,

DANIEL KOPULSKY
Office Chief
Community Planning/Local Development Review
Division of Planning

cc: Scott Morgan, Acting Director, State Clearinghouse, Office of Planning and Research, 1400 10th Street, P.O. Box 3044, Sacramento, CA 95812-3044

Comment Letter # 4

APPLE VALLEY RANCHOS WATER CO.

P.O. BOX 7005
21760 OTTAWA ROAD
APPLE VALLEY, CA 92307
(760) 247-6484 • FAX (760) 247-1654

June 17, 2010

Mr. Logan Olds, General Manager
Victor Valley Wastewater Reclamation Authority
15776 Main Street, Suite 3
Hesperia, CA 92345

Re: Town of Apple Valley Wastewater Reclamation Plant EIR & Nanticoke Pump Station Bypass Sewer Line Project Mitigated Negative Declaration

Dear Mr. Olds,

4-1 Apple Valley Ranchos Water Company has received the documentation on the above projects. We intend to offer our comments and perspective on both the reclamation plant and the bypass sewer line. The short turnaround time for comments is putting a strain on our data searches to make meaningful comments on projects of this importance. It would be our preference to have additional research time to make sure we properly reviewed the proposed projects.

Apple Valley Ranchos Water Company formally requests an extension of the comment period, and a unification of the due dates for comments on the two projects. We request an extension of the comment period to July 30, 2010. Because of the due date for comments to the reclamation plant (June 28, 2010) is rapidly approaching, your earliest possible reply would be appreciated.

Thank you for your time and consideration on this matter,

Sincerely,

Scott Weldy
Vice President/General Manger
Apple Valley Ranchos Water Company

HFB 964454.1 W4302058

Comment Letter #5

Tom Dodson

CA221

From: Logan Olds [lolds@vvwra.com]
Sent: Thursday, June 17, 2010 3:36 PM
To: Scott Weldy
Cc: Jill Seney; Tom Dodson; Linda Ellsworth
Subject: Subregional

HI Scott,

5-1 I have reviewed the letter you provided electronically requesting additional time to comment on the subregional facility located in the TOAV and the Nanticoke interceptor projects. After speaking with our environmental consultant the Authority is concerned about our ability to adopt the EIR at our September 16th Board meeting. In recognition of the important and long standing relationship between VVWRA and Apple Valley Ranchos, the Authority agrees to extend the deadline for comments to AVR to 13 July 2010 at 4pm.

We look forward to receiving your comments and trust that this will provide sufficient time to prepare them.

Thank You

Logan Olds
General Manager
Victor Valley Wastewater Reclamation Authority

760-948-9849

Hesperia Administration Office
15776 Main Street, Suite 3
Hesperia, CA 92345

****
This email and any files transmitted with it may contain privileged or otherwise confidential information. If you are not the intended recipient, or believe that you may have received this communication in error, please advise the sender via reply email and delete the email you received.
****

Comment Letter #6

STATE OF CALIFORNIA – THE RESOURCES AGENCY

ARNOLD SCHWARZENEGGER, Governor

DEPARTMENT OF WATER RESOURCES
1416 NINTH STREET, P.O. BOX 942836
SACRAMENTO, CA 94236-0001
(916) 653-5791

JUN 24 2010

RECEIVED
JUN 30 2009
VVWRA

Victor Valley Wastewater Reclamation Authority
Attn: Logan Olds
15776 Main Street, Suite 3
Hesperia, CA 92345

Notice of Preparation of an Environmental Impact Report for the Proposed Town of Apple Valley Wastewater Reclamation Plant, City of Hesperia Wastewater Reclamation Plant, and Related Facilities, Cities of Apple Valley and Hesperia, San Bernardino County, Southern Field Division, Near California Aqueduct Milepost 394.5, SCH2010051087

Dear Mr. Olds:

Thank you for the opportunity to review and comment on the Notice of Preparation (NOP) for an Environmental Impact Report for the Proposed Town of Apple Valley Wastewater Reclamation Plant, City of Hesperia Wastewater Reclamation Plant, and Related Facilities project. The document describes a proposal by the Victor Valley Wastewater Reclamation Authority (Authority) to develop two sub-regional wastewater reclamation facilities in the town of Apple Valley and in the City of Hesperia.

6-1 The Department of Water Resources (DWR) reviewed the NOP and has the following comments regarding the proposed City of Hesperia Wastewater Reclamation Plant (Plant):

1. The NOP describes two location options for the proposed Plant:

    a. Option A would locate the Plant approximately 800 feet west of the California Aqueduct (Aqueduct), part of the State Water Project (SWP), within the Oro Grande Wash watershed. Several pipeline routing options are detailed for conveying the wastewater approximately 3 miles from a proposed lift station, which would be located at Mojave Street and Maple Avenue and would be common to both Plant design alternatives. All of the conveyance routing options are located between Oro Grande Wash and Interstate 15 and would require that pumped wastewater cross the Aqueduct. Until a preferred conveyance route has been selected, DWR can not fully review the proposed project for potential impacts to the SWP. In addition, DWR has concerns regarding the proposed location of the Plant within the Oro Grande Wash watershed. DWR has ongoing maintenance issues caused by sediment deposition at the inlet to the culvert located at DWR Milepost 394.5, which passes the Oro Grande

Wash drainage under the Aqueduct. DWR is concerned that any earth work or construction projects upslope of the Aqueduct could exacerbate the existing problems that are currently experienced at the culvert inlet;

6-2 b. DWR would have no objection to Option B, which would locate the proposed Plant on Mojave Street near the proposed lift station.

2. The NOP does not contain enough design detail to determine how the wastewater pipelines, described in Option A, would cross the Aqueduct. Due to environmental concerns, it is DWR policy that no hazardous or dangerous materials, including wastewater, cross over SWP open canals. The policy restricts any pipeline conveying hazardous or dangerous materials from crossing over SWP open canals unless the following conditions are addressed to DWR's satisfaction:

6-3 a. Crossing beneath or around the open canal is not feasible, AND

b. The cost of directional drilling is substantially higher than crossing over the open canal, AND

c. The encroachment permit applicant, or assuming party, shall bear full responsibility for any spillage and all costs borne by DWR to remediate impacts. Those costs include, but are not limited to clean-up, repairs to damaged DWR facilities, service disruptions, water treatment as a result of the contamination, legal fees, environmental permits, and any penalties incurred as a result of the incident.

6-4 3. Any construction work within DWR right of way will require an Encroachment Permit issued by DWR.

6-5 4. Because of the complexity of the issue and the number of alternative wastewater crossing alternatives, it would be beneficial to schedule a site visit with representatives of the Authority, City of Hesperia and DWR to discuss concerns DWR has with the various alternative locations. Contact Jaime DeSantiago of DWR Southern Field Division at (661) 944-8574 at least 7 days in advance to arrange DWR presence for site inspection or to obtain a temporary entry permit for any surveys required for you project. In addition, notify Leroy Ellinghouse of my staff at (916) 653-7168 if you would like to schedule a site visit.

Information regarding forms and guidelines for submitting an application for an Encroachment Permit can be found at DWR web address:

http://www.doe.water.ca.gov/Services/Real_Estate/Encroach_Rel/index.cfm

6-6 Please provide DWR with a copy of any subsequent environmental documentation when it becomes available for public review.

If you have any questions, please contact Scott Williams of my staff at (916) 653-5746.

Sincerely,

for

David M. Samson, Chief
State Water Project Operations Support Office
Division of Operations and Maintenance

Comment Letter #7

California Regional Water Quality Control Board
Lahontan Region

Linda S. Adams
Secretary for Environmental Protection

Victorville Office
14440 Civic Drive, Suite 200, Victorville, California 92392
(760) 241-6583 • Fax (760) 241-7308
http://www.waterboards.ca.gov/lahontan

Arnold Schwarzenegger
Governor

July 1, 2010

Logan Olds, General Manager
Victor Valley Wastewater Reclamation Authority
2011 Shay Road
Victorville, CA 92394

NOTICE OF PREPARATION OF A DRAFT ENVIRONMENTAL IMPACT REPORT, VICTOR VALLEY WASTEWATER RECLAMATION AUTHORITY RECLAMATION FACILITIES PROJECT, STATE CLEARINGHOUSE NO. 2010051087, SAN BERNARDINO COUNTY

7-1 The California Regional Water Quality Control Board, Lahontan Region (Water Board) staff thank you for providing the Notice of Preparation (NOP) dated May 26, 2010 for the above-referenced Project proposed by VVWRA. We received the NOP on June 1, 2010. Water Board staff also discussed the Proposed Project with representatives of your consultant, Tom Dodson and Associates, during the June 15, 2010 scoping meetings sponsored by VVWRA in the Town of Apple Valley.

Project Description

7-2 VVWRA is proposing a project to construct two new sewage treatment plants (Facilities), which would be located in Apple Valley and the City of Hesperia. The total treatment and disposal capacity of VVWRA's existing Regional Facility is 18.0 million gallons per day (mgd). The two Proposed Facilities would increase the total tertiary treated water capacity to 15 mgd.

VVWRA's Regional Facility currently treats about 12.2 mgd of wastewater. Approximately 8.2 mgd is discharged to the Mojave River and 4.0 mgd is discharged to percolation ponds. The NOP states that recycled water generated by the Project "would be used mainly for landscape irrigation and for industrial uses". During the June 15, 2010 public scoping meeting, VVWRA's consultant indicated that whenever the irrigation demand is low, any excess recycled water will be delivered to percolation ponds. A percolation pond site would be located at each Facility and would be designed to have capacity to dispose of all recycled water generated by that Facility. It is anticipated that construction completion and startup operation of the Apple Valley and Hesperia sub-regional plants is within fiscal years 2012 or 2013.

Comments

Water Board staff has reviewed your NOP and provides the following comments.

7-3 1. The Regional Board has adopted a Water Quality Control Plan for the Lahontan Region (Basin Plan), which contains prohibitions, water quality standards, and policies for implementation of standards. The Basin Plan is available on line at the Regional Board's Internet site at http//:www.waterboards.ca.gov/. Please cite and discuss applicable portions of the Basin Plan in the Environmental Impact Report (EIR). The owner(s) and operator(s) of the Facilities will need to comply with all applicable numeric and narrative water quality objectives and prohibitions, including provisions of the Basin Plan and the Statewide Inland Surface Waters Plan.

2. The EIR will need to identify and evaluate potential impacts to water quality from the proposed recycled water reuse/disposal. The EIR will need to describe in sufficient detail how:

7-4
   a. The owner(s) and operator(s) will comply with the Basin Plan requirement for a minimum of secondary treatment and nutrient removal for all wastewater allowed to percolate,
   b. The Project will minimize salinity impacts (both cumulative and non-cumulative) and comply with Basin Plan water quality standards for salinity. The EIR must have a cumulative impact analysis. Any mitigation measures to address future increases in salinity, which are expected to occur in ground and surface waters as development continues in the Victor Valley, shall also be included,
   c. The Project will affect the groundwater beneath the sub-regional plants and whenever recycled water is utilized considering both the magnitude and extent any potential impacts,
   d. The Project will avoid and minimize changes to surface water run-off from construction of facilities and related infrastructure such as roads, culverts, and distribution systems, etc.

7-5 3. The EIR will need to provide a description of control measures to ensure there will not be treatment plant upsets, or wastewaters and sludges that contain toxic constituents that could cause treatment plant upsets or be a threat to human health or water quality. The EIR must also include response measures if upsets or spills occur. Please include a description in the EIR of proposed measures to prevent any adverse impacts, including a description of the programs for industrial wastewater pretreatment and sludge handling.

7-6 4. The EIR needs to describe and evaluate potential environmental impacts from treatment and disposal of sewage solids that will be generated by the Proposed Project.

7-7 5. The EIR will need to provide in sufficient detail how the producer (owner(s) and operator(s) of the Facilities) and the user (owner(s) and operator(s) of the irrigation sites) will comply with the Title 22 Water Recycling Criteria to mitigate potential impacts to public health. The EIR will need to include information that will be incorporated into the Salt and Nutrient Management Plan being developed for the affected groundwater basin(s) and any potential impacts to the current native water quality within the groundwater basin.

7-8 6. The Mojave Hydrologic Unit Prohibition No. 4 prohibits the discharge of wastes of sewage-bearing origin to the Mojave River of the Lower Narrows (*Basin Plan, 4.1-11)*. Under the exemption criteria language, proposed dischargers may apply for an exemption to the prohibition whenever the Regional Board finds the discharge of waste will not, individually or collectively, directly or indirectly, result in exceeding the water quality objectives or unreasonably affect the water for its beneficial uses. The EIR should include information that evaluates the Project with regard to these criteria.

7-9 7. The EIR needs to evaluate Proposed Project impacts to the riparian habitat located in the Mojave River Channel adjacent to (and downgradient of) VVWRA's existing regional facility. This habitat currently receives a certain flow from the Regional Facility. If the Proposed Project changes the existing flows to the West Regional Treatment Facility, it may also affect flows to the riparian habitat. The EIR needs to evaluate:

   a. The effects of the Proposed Facilities on the West Regional Treatment Facility flows,
   b. The significance of impacts from any proposed reduction or other changes in flow, and
   c. All feasible alternatives and mitigation measures that could substantially lessen or avoid any impacts that are identified.

7-10 8. The EIR needs to provide information on hydrology and groundwater quality in the area of the proposed percolation ponds and at re-use areas. Such information is needed to evaluate the potential environmental impacts of the proposed recycled water reuse or disposal. Information needed includes, but is not limited to information on:

   a. Depth to ground water,
   b. Aquifer thickness,
   c. Direction of ground water flow,
   d. Existing (background) ground water quality,
   e. Locations of existing water supply wells (both active and inactive),
   f. Use of wells (agricultural, domestic, stock watering. Etc.),
   g. Lithology and characteristics of the unsaturated zone, and
   h. Soil and aquifer hydraulic conductivity.

7-11 The EIR shall identify and quantify changes to the above list of parameters, including but not limited to any changes in background water quality including the magnitude and extent of such changes.

Additional Information Regarding Permitting

7-12 General information pertaining to obtaining Waste Discharge Requirements (WDRs) is as follows.

1. WDRs and/or Water Recycling Requirements (WRRs) will need to be established before the proposed reuse/disposal of recycled water can begin. The owner(s) and operator(s) of the Facility and reuse sites will be required to file a Report of Waste Discharge (RWD) with the Regional Board for the proposed reuse/disposal.

7-13

2. The Facilities will be required to comply with two separate National Pollutant Discharge Elimination System (NPDES) – General Permits. One is for stormwater discharges associated with construction activities. The other is for stormwater discharges associated with industrial activities (excluding construction activities). The applicant will be required to complete a separate Notice of Intent (NPDES General Permit Application) for each General Permit.

7-14 Please note that obtaining a permit and conducting monitoring does not constitute evaluation of potential impacts or measures to avoid, minimize or mitigate impacts. The EIR must include a thorough evaluation of the proposed Project and any control measures or mitigation incorporated.

If you should have any questions regarding these comments, please contact me at (760) 241-7366 or Cindi Mitton at (760) 241-7413.

Sincerely,

John Morales, P.E.
Water Resources Control Engineer

cc: Mailing List

CM/rc/U:/Drafts/VVWRA/NOP VVWRA

MAILING LIST

Kirby Brill, Gen Mgr
Mojave Water Agency
PO Box 1089
Apple Valley, CA 92307

Tom Dodson
Tom Dodson & Assoc.
2150 N. Arrowhead Ave.
San Bernardino, CA 92405

State Clearinghouse
PO Box 3044
Sacramento, CA 95812-3044

Comment Letter #8

APPLE VALLEY RANCHOS WATER CO.

P.O. BOX 7005
21760 OTTAWA ROAD
APPLE VALLEY, CA 92307
(760) 247-6484 • FAX (760) 247-1654

July 13, 2010

Mr. Logan Olds
Victor Valley Wastewater Reclamation Authority
15776 Main Street, Suite 3
Hesperia, CA 92345

Subject: **Town of Apple Valley Wastewater Reclamation Plant & Nanticoke Pump Station Bypass Project**

Dear Mr. Olds,

8-1 It was brought to our attention the week of May 31, 2010, that the Victor Valley Wastewater Reclamation Authority (VVWRA) had released for review the Notice of Preparation (NOP), Preliminary Design Report (PDR), and Initial Study (IS) for the Town of Apple Valley Wastewater Reclamation Plant. Additionally, we were notified the week of June 7, 2010, of an IS/Environmental Assessment for the Nanticoke Pump Station Bypass Sewer Line Project. On June 17, 2010, Apple Valley Ranchos Water Company (AVRWC) requested an extension of the comment periods for both projects, and received an extension to July 13, 2010, at 4:00 PM. AVR would like to thank VVWRA for the time extension to properly review these important projects.

Town of Apple Valley Wastewater Reclamation Plant

8-2 In section 1.2, Purpose and Need, there are five general objectives and three specific objectives discussed. Item 1 of the stated objectives is to locate the wastewater plant to "facilitate an increase in the use of recycled water near end users". Item 3 of the stated objectives is to provide expanded infrastructure for collection, treatment and disposal systems "as needed to either protect groundwater, or to accommodate growth in the Authority's service area". Item 4 of the stated objectives is to "Maximize the total water supply available to the community". Item 5 of the stated objectives is to "Minimize any adverse economic and environmental impact to the community".

In item 1, the stated objective implies end users will benefit from the recycled water. No inventory of end users was listed or supplied, and the only use seems to be aquifer recharge. The reclamation plant design developed in the PDR is for irrigation and not recharge. If there is no other use for the recycled water than to percolate the water back into the aquifer, then the reference to end users should be removed and an analysis of the cost benefit of the plant construction based on percolation only should be included. If there are intended end users for the recycled water, then the list of users should be included with demands projected seasonally and annually.

8-3 In item 3, the stated objectives lead the reader to understand that by increasing the size or quantity of the existing facilities that either the groundwater will be protected, or "growth in the Authority's service area" will be accommodated. If the size and quantity of the existing facilities are inadequate to meet the needs of current users and protect the groundwater, a discussion of the limitations of the existing facilities should be included for a better understanding of the severity of these limitations. On the other hand, if increasing the size and quantity of facilities will allow growth in VVWRA's service area, an extensive discussion should be included of where in the service area this growth will occur, who will benefit by this growth, and is this benefit growth inducing?

8-4 In item 4, the stated objective implies additional water supply, but at a cost to whom? The use of a sub-regional wastewater reclamation plant will change the point of discharge of reclaimed water used to recharge the aquifer from the Mojave River to the proposed location at the project in North Apple Valley. According to the court order adjudicating the Mojave basin, any reduction to the discharge at the Mojave River will result in additional downstream obligation (make-up assessment) to all Alto Sub-basin water producers which will increase the annual make-up assessment they must pay to the Mojave Water Agency. The downstream obligation is calculated as the shortfall of the combination of the flows over the lower narrows gage plus the return flows from VVWRA minus some production in the transition zone, compared to a required annual minimum flow from the Alto sub-basin to the Centro sub-basin set by the adjudication so a reduction in the VVWRA return flow will increase the obligation. This increase in annual costs will affect not only water purveyors in the Alto sub-basin, but also affect agricultural pumpers in the Alto sub-basin. A complete discussion of this effect needs to be included in the EIR. The change of discharge from the Mojave River will also have some impact on the Transition Zone north of VVWRA, and needs to be understood and quantified as it relates to wildlife, phreatophytes, and downstream users.

8-5 In item 5, the stated objective is to "Minimize any adverse economic and environmental impacts". The IS acknowledges that there are potentially significant adverse environmental effects. While it is important to minimize adverse impacts of any project, it is not an "objective" in the sense that it supports the project over the no project alternative. Some potentially adverse economic effects not discussed in the IS are as follows. The change in the point of discharge from the Mojave River to other areas in the Alto sub-basin will result in some economic impact to all Alto producers. Any economic impact to an Alto agriculture user would seem to be "adverse", as was discussed in the Mojave Basin Area Adjudication. How the costs associated with the construction and maintenance of the proposed project will affect existing sewer customers should be quantified, and the costs associated with the additional make-up obligation for retail water customers should be understood. If there will be ongoing O&M costs for the proposed project and some level of obligation for the bonding of construction, a retail water customer in the Alto sub-basin who is also on the sewer system will be subsidizing these items and the added cost for the increase in make-up water obligation.

8-6 The specific objective "a" states "Provide sufficient wastewater treatment capacity to ensure continuous compliance with anticipated regulatory requirements".

- The California Department of Public Health (CDPH) has published draft regulations for the recharge of groundwater with recycled municipal wastewater. The regulations reflect the CDPH's thinking on how to protect groundwater resources. The draft regulations address additional constituents and retention time requirements in the ground. The draft regulations should be the starting point for the project development and environmental studies since they define a conservative approach and will be eventually adopted in some form.

8-7 - The wastewater characteristics listed in the IS include only the constituents necessary to design a conventional wastewater treatment facility. There is no listing of the more difficult to treat trace constituents that threaten groundwater supplies in California. Apple Valley's wastewater should be tested to determine if there are potential treatment problems from non-domestic waste.

8-8 - The State Water Resources Control Board has initiated a program to develop salt and nutrient management plans to prevent the degradation of groundwater aquifers in important basins. The local basin and sub-basin will have a management plan. The environmental documentation should consider the potential impacts of these constituents from the percolation ponds.

0-9 - There is no discussion of Chemicals of Emerging Concern (CECs). What is the analysis of the wastewater for pharmaceuticals, personal care products, endocrine disruptors or prions? What is the potential for introducing these chemicals into the groundwater from these percolation ponds?

8-10 - AVR Wells 24 and 27 are directly down gradient from the proposed percolation ponds. There is significant evidence from the Los Angeles County reclamation system in Palmdale/Lancaster of their percolation ponds having a significant negative impact on the quality of the ground water with the introduction of nitrogen. There is no analysis on the potential impact to AVRs wells 24 and 27 from this proposed operation. The report recommends "...designing the biological treatment system to initially comply with a maximum Total Nitrogen (TN) limit of 10 mg/L, with provisions to meet a TN limit of 5 mg/L with minimal process modification". (Page 1B-5). There is no explanation or discussion of why the plant is not being designed to meet 5 mg/L to begin with.

Additional areas of concern

Hydro geologic analysis of the percolation pond sites

8-11 - The report states the basis for the use of percolation ponds in a statement on page 4B-5, "based on percolation rates established for other sites of similar soil characteristics (sandy soil)". The proposed percolation ponds are in or adjacent to the existing surface features of a dry lake bed. The potential for a subterranean extension of the dry lake bed is very good. AVRWC well 24 is located about 2,300 feet from the first percolation site, and about 4,300 feet from the second site. The well 24 Water Well Drillers Report shows hard packed fine sand and clay down to 35 feet, and a 40% clay content down to 120 feet. There is no hydro geologic analysis in the report that shows that there is any potential for percolation at these sites. Attached are AVRWC well 24 Water Well Drillers Report and a proximity map showing well 24 and the two proposed percolation ponds.

8-12

- The hydrology should be carefully modeled to determine the percolation impacts and trace the flow of percolating wastewater to the groundwater and water wells. The studies should be developed for the project flow of 4 mgd. Particular concern is the transit time between percolation and the nearest well.

8-13

- The PDR does not discuss or acknowledge that the percolation ponds will impact the aquifer and essentially be a recharge system. The reclamation plant design developed in the PDR is for irrigation and not recharge. The development of an irrigation project is mentioned many times but no details have been developed. As presented without a developed irrigation system, the disposal mechanism will be percolation and the EIR has to consider the impacts of several years of percolation at the stated capacity of 4 mgd.

Storage of reclaimed water for potential demands by irrigation use

8-14

- There is no discussion of a reclaimed water *system* and the possibility of storing the water in storage tanks to meet peak demands for potential irrigation uses. After reclaimed customers are satisfied, excess reclaimed water would be sent to properly sited and designed percolation ponds or the regional treatment facility.

Catastrophic site failure

8-15

- What types of physical or electrical/mechanical barriers are proposed to protect the adjacent park and residential neighbors from a massive overflow from a failure at the plant? Will the proposed lift station and force main transfer the full sewage input to the existing plant?

Purveying and distribution of recycled water

8-16

There is a potential for duplication of service if VVWRA decides to become the purveyor of recycled water in AVRWC's service territory. The NOP is mute on who VVWRA sees as the purveyor and distributor of the recycled water, but comments made by Logan Olds, and noted by AVRWC staff, at the June 15th, 2010, Public Hearing at Vista Campana Middle School, summarized below, tend to indicate VVWRA does intend to be the purveyor.

8-17

- Reclaimed water lines already exist and run parallel to the existing force main that runs from Brewster Park to Rancherias & Hwy 18 intersection. VVWRA indicated that when the plant is on-line they could easily connect to the existing reclaimed water pipe and serve Thunderbird Park and Vista Campana Middle School.

- At this time, they intend to supply reclaimed water for irrigation purposes to Brewster Park. Then in the future they intend to supply the Civic Center Park, Thunderbird Park and A.V. Country Club.

8-18 A complete discussion of VVWRA's intentions or preferences on how recycled water will be distributed and purveyed will need to be included in the final EIR. AVRWC is available to help facilitate these discussions if requested.

Nanticoke Pump Station Bypass Project

The documents do not indicate that the bypass project would somehow mandate that a reclamation plant be built in Apple Valley. Are the two projects independent of each other?

The alignment may parallel some AVRWC pipelines. This is a large diameter pipe and its construction trench may encroach on the existing water main. There also may be some parallel pipe that does not meet the CDPH standard for separation. Design drawings should be reviewed by both the AVRWC staff and the CDPH staff. AVRWC staff is available for this alignment review.

We would like to thank you for the opportunity to comment on the NOP for proposed reclamation plant and the IS/EA for the bypass project. We look forward to the draft EIR and request direct notification when it is available.

Sincerely,

Scott Weldy
Vice President/General Manager
Apple Valley Ranchos Water Company

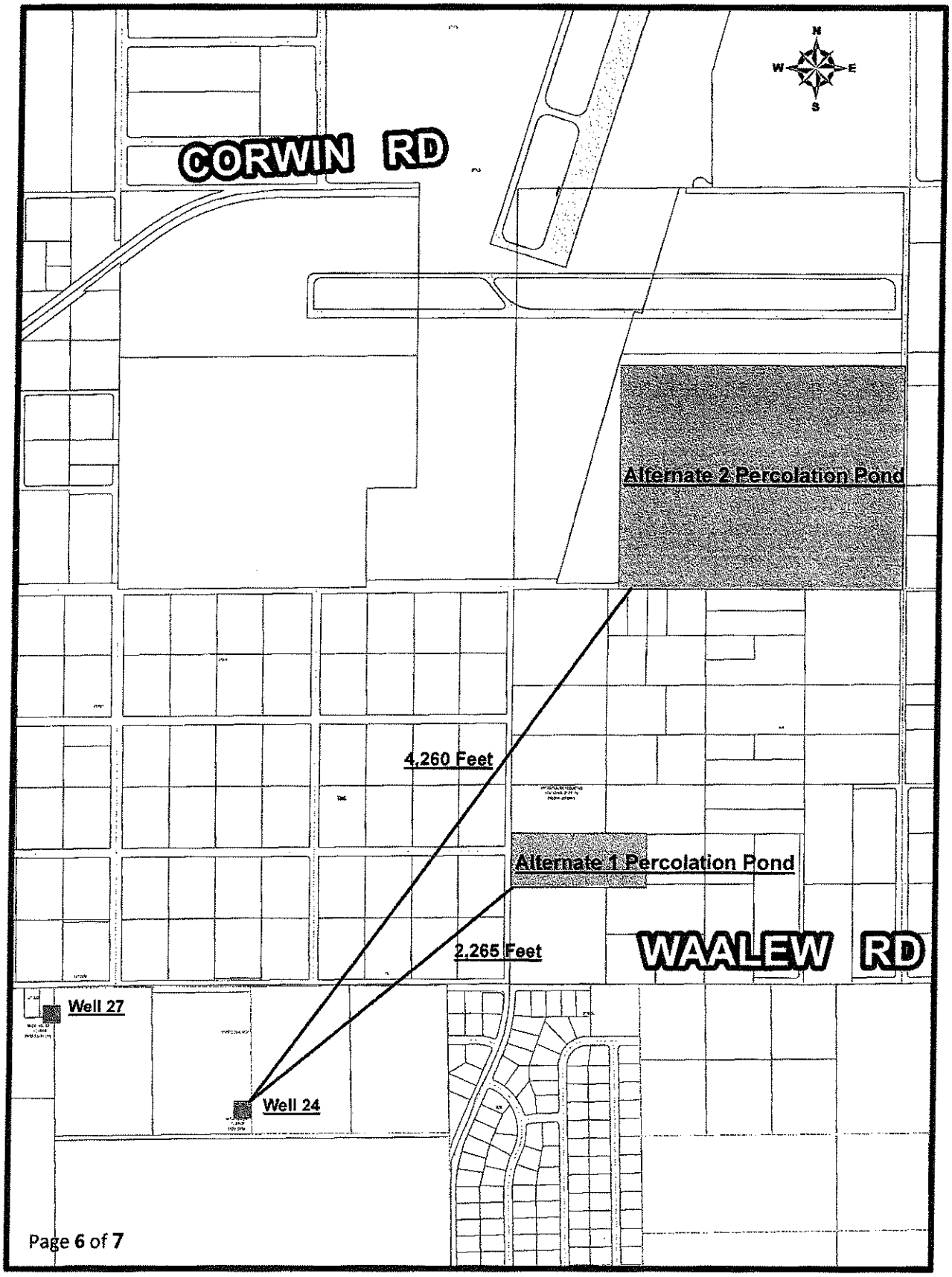
N
W
E
S
CORWIN RD
Alternate 2 Percolation Pond
4,260 Feet
Alternate 1 Percolation Pond
2,265 Feet
WAALEW RD
Well 27
Well 24

Copy made for my employer

Well 24

STATE OF CALIFORNIA
THE RESOURCES AGENCY
DEPARTMENT OF WATER RESOURCES

WATER WELL DRILLERS REPORT

Do not fill in

No. 158461

State Well No. 05N/03W04B02

Other Well No.

Notice of Intent No.

Local Permit No. or Date 04198503

(1) OWNER: Name American Best Tool Co.
Address 17193 Joshua Road
City Apple Valley, CA Zip 92307

(2) LOCATION OF WELL (See instructions):
County San Bernardino Owner's Well Number 24
Well address if different from above 21483 Waalew Rd. A.V.
Township 5N Range 3W Section 4
Distance from cities, roads, railroads, fences, etc. 440-012-11

WELL LOCATION SKETCH

(3) TYPE OF WORK:
New Well XX Deepening ☐
Reconstruction ☐
Reconditioning ☐
Horizontal Well ☐
Destruction ☐ (Describe destruction materials and procedures in Item 12)

(4) PROPOSED USE:
Domestic ☐
Irrigation ☐
Industrial XX
Test Well ☐
Stock ☐
Municipal ☐
Other ☐

(5) EQUIPMENT:
Rotary XX Reverse ☐
Cable ☐ Air ☐
Other ☐ Bucket ☐

(6) GRAVEL PACK:
Yes XX No ☐ Size 3/8
Diameter of bore 24"
Packed from 50 to 330 ft.

(7) CASING INSTALLED:
Steel XX Plastic ☐ Concrete ☐

(8) PERFORATIONS: Milled slot
Type of perforation or size of screen

From ft.	To ft.	Dia. in.	Gage or Wall	From ft.	To ft.	Slot size
0	330	14	.250	133	330	3/32x2½

(9) WELL SEAL:
Was surface sanitary seal provided? Yes XX No ☐ If yes, to depth 50 ft.
Were strata sealed against pollution? Yes ☐ No XX Interval ft.
Method of sealing Cement grout

(10) WATER LEVELS:
Depth of first water, if known ft.
Standing level after well completion 155 ft.

(11) WELL TESTS:
Was well test made? Yes XX No ☐ If yes, by whom? Driller
Type of test Pump ☐ Bailer ☐ Air lift ☐
Depth to water at start of test ft. At end of test 155 ft.
Discharge 1700 gal./min after 24 hours Water temperature
Chemical analysis made? Yes XX No ☐ If yes, by whom?
Was electric log made? Yes ☐ No XX If yes, attach copy to this report

(12) WELL LOG: Total depth 340 ft. Depth of completed well 330 ft.

from ft.	to ft.	Formation (Describe by color, character, size or material)
0	35	Hard packed fine sand & clay
35	50	Fine and medium sand 20% clay
50	120	Medium & course sand 40% clay
120	130	Medium sand 10% clay
130	155	Medium & course sand 10% clay
155	180	Medium & course sand & gravel 10% clay
180	185	Course sand & cobble stones 5% clay
185	250	Course sand & gravel 10% clay
250	260	Fine & medium sand
260	268	Course sand & gravel 10% clay
268	322	Course sand & gravel 20% clay
322	340	Hard conglomerate

Work started 5-1 1985 Completed 5-20 1985

WELL DRILLER'S STATEMENT:
This well was drilled under my jurisdiction and this report is true to the best of my knowledge and belief.

Signed [signature] (Well Driller)

NAME Wallis Water Systems, Inc. (Person, firm, or corporation) (Typed or printed)
Address 34474 Lenwood Road
City Barstow, CA Zip 92311
License No. 432905 Date of this report June 1, 1985

 IF ADDITIONAL SPACE IS NEEDED, USE NEXT CONSECUTIVELY NUMBERED FORM

WELL 24

DRAFT ENVIRONMENTAL IMPACT REPORT FOR VICTOR VALLEY WASTEWATER RECLAMATION AUTHORITY, TOWN OF APPLE VALLEY WRP, CITY OF HESPERIA WRP, AND RELATED FACILITIES

(Volume 2 – Technical Appendices)

Project Proponent and CEQA Lead Agency:

Victor Valley Wastewater Reclamation Authority
15776 Main Street, Suite 3
Hesperia, California 92345
(760) 948-9849

Preparer:

Tom Dodson & Associates
2150 North Arrowhead Avenue
San Bernardino, California 92405
(909) 882-3612

November 2010

REVIEW PERIOD: November 11, 2010 – December 27, 2010

TABLE OF CONTENTS

Volume 1 – Environmental Impact Report *(under separate cover)*

Volume 2 – Technical Appendices

Appendix 1 PDR – Town of Apple Valley WRPs (December 2009)

Appendix 2 PDR – City of Hesperia WRPs (December 2009)

Appendix 3 PDR – City of Hesperia Lift Station and Force Main (December 2009)

APPENDIX 1

Final

PRELIMINARY DESIGN REPORT

Town of Apple Valley WRP

December 2009

carollo
Engineers...Working Wonders With Water™

in association with HDR

VICTOR VALLEY WASTEWATER RECLAMATION AUTHORITY

HESPERIA AND APPLE VALLEY WATER RECLAMATION PLANTS

TOWN OF APPLE VALLEY WRP

PRELIMINARY DESIGN REPORT

FINAL

December 2009

REGISTERED PROFESSIONAL ENGINEER
JAMES F. HAGSTROM
No. C50890
Exp. 09/30/11
CIVIL
STATE OF CALIFORNIA

REGISTERED PROFESSIONAL ENGINEER
ANDREW C. GILMORE
No. C66158
Exp. 06/30/10
CIVIL
STATE OF CALIFORNIA

The undersigned has approved this document for and on behalf of Carollo Engineers, P.C.

Partner

3033 NORTH 44TH STREET, SUITE 101 • PHOENIX, ARIZONA 85018 • (602) 263-9500 • FAX (602) 265-1422

pw://Carollo/Documents/Client/CA/VVWRA/8229A00/Deliverables/PDR_ESB.doc (Final)

Victor Valley Wastewater Reclamation Authority

Town of Apple Valley WRP

PRELIMINARY DESIGN REPORT

TABLE OF CONTENTS

Page No.

1.0 INTRODUCTION 1

2.0 BACKGROUND 1

3.0 TREATMENT PROCESS 3

4.0 BASIS OF DESIGN 8

5.0 PROJECT COSTS AND SCHEDULE 11
- 5.1 Project Costs 11
- 5.2 Project Schedule 14

LIST OF APPENDICES

DIM No. 1B	Design Flows and Loadings
DIM No. 2B	Plant Hydraulics
DIM No. 3B	Process Modeling
DIM No. 4B	Permitting and Effluent Disposal (forthcoming)
DIM No. 5B	Preliminary Treatment
DIM No. 6B	Secondary Treatment
DIM No. 7B	Disinfection
DIM No. 8B	Reclaimed Water Pump Station
DIM No. 9B	Residuals Handling and Disposal
DIM No. 10B	Site Aesthetics
DIM No. 11B	Electrical Power and Distribution (forthcoming)
DIM No. 12B	Instrumentation and Controls (forthcoming)
DIM No. 13B	Site Layout and Constraints

LIST OF TABLES

Table ESB.1 Design Criteria 8
Table ESB.2 AACEI Cost Estimate Classification Matrix for Process Industries 12
Table ESB.3 Opinion of Probable Construction Costs 13
Table ESB.4 Project Schedule 14

LIST OF FIGURES

Figure ESB-1 Site Layout 2
Figure ESB-2 Process Flow Diagram 4
Figure ESB-3 Conceptual Architectural Section 5
Figure ESB-4 Plant - Section A 6
Figure ESB-5 Plant - Section B 7

1.0 INTRODUCTION

The Victor Valley Wastewater Reclamation Authority (VVWRA) in collaboration with its member agencies, City of Hesperia (Hesperia) and Town of Apple Valley (Apple Valley) has developed a strategic goal of locating subregional Water Reclamation Plants (WRPs) to augment reclaimed water capabilities. These subregional WRPs will be located in Hesperia and Apple Valley and these facilities are the focus of this preliminary design effort.

In order to report the results and conclusions of the preliminary design effort, a series of Design Information Memoranda (DIMs or individually as DIM) were developed. The DIMs, in their entirety, are included under separate tabs within this Preliminary Design Report (PDR). The DIMs discussed in this PDR are as follows.

- DIM No. 1B - Design Flows and Loadings
- DIM No. 2B - Plant Hydraulics
- DIM No. 3B - Process Modeling
- DIM No. 4B - Permitting and Effluent Disposal (forthcoming)
- DIM No. 5B - Preliminary Treatment
- DIM No. 6B - Secondary Treatment
- DIM No. 7B - Disinfection
- DIM No. 8B - Reclaimed Water Pump Station
- DIM No. 9B - Residuals Handling and Disposal
- DIM No. 10B - Site Aesthetics
- DIM No. 11B - Electrical Power and Distribution (forthcoming)
- DIM No. 12B - Instrumentation and Controls (forthcoming)
- DIM No. 13B - Site Layout and Constraints

2.0 BACKGROUND

VVWRA has decided to design and construct scalping plants within the overall wastewater collection system in order to reuse water closer to the end users. The first two scalping plants to be developed under this overall reuse goal are the Hesperia and Apple Valley Water Reclamation Plants (WRP or plural as WRPs). The WRPs will serve as scalping plants in order to deliver a fairly consistent reclaimed water production of 1.0 million gallons per day (mgd). Both WRPs will be designed for expansion to 2.0 mgd, while the Hesperia WRP may be expanded up to 4.0 mgd and the Apple Valley WRP could be expanded beyond 2.0 mgd in the future. The Apple Valley WRP will be located on the north side of Otoe Road, just east of Quantico Road, as shown in Figure ESB-1.

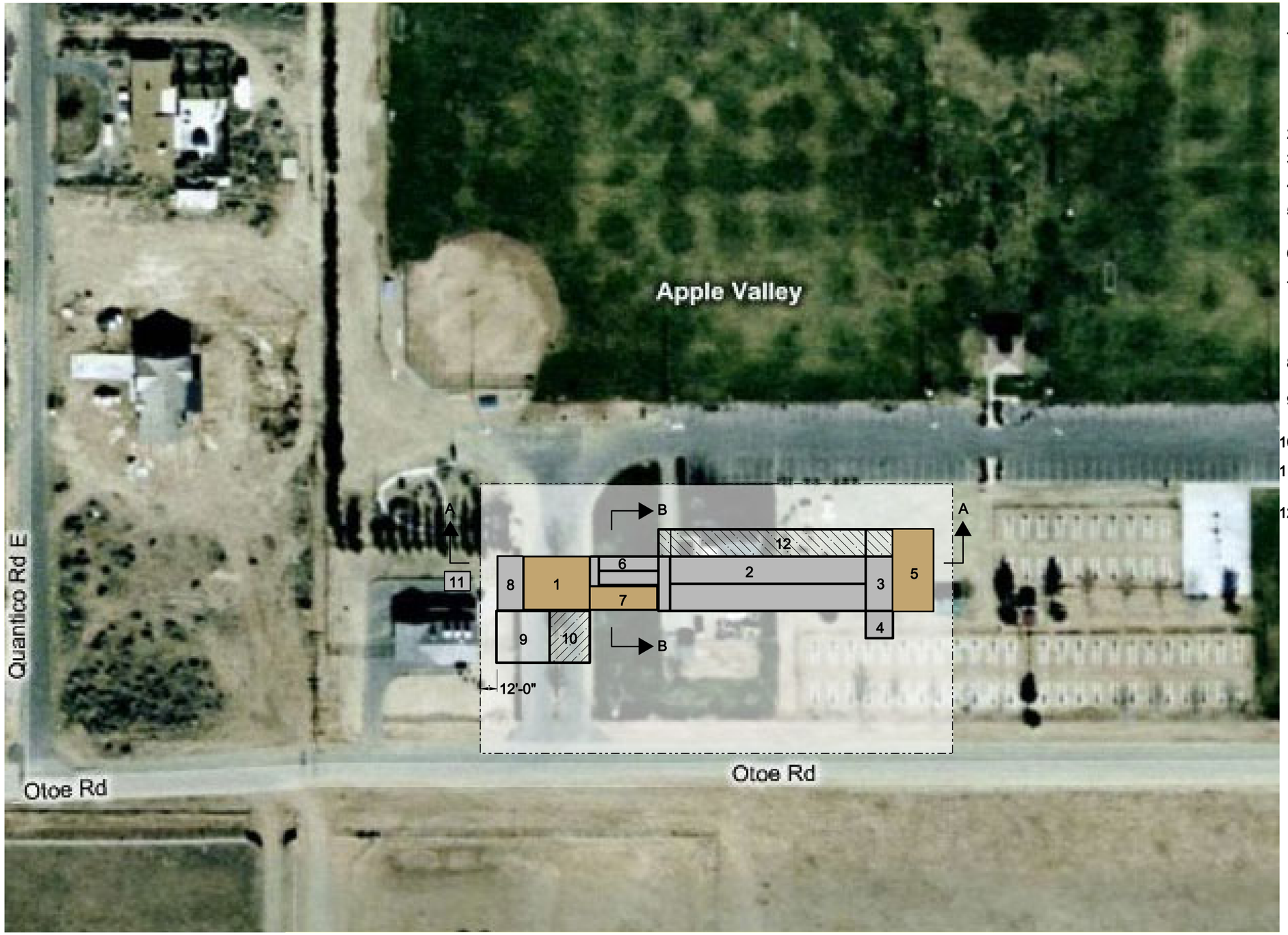

LEGEND

1. HEADWORKS/ MBR FACILITY BUILDING.
   FLOOR LEVEL: INFLUENT SCREENS, CITRIC ACID/ SODIUM HYPO STORAGE & FEED.
   LOWER LEVEL: UV SYSTEM & PERMEATE PUMPS
2. BIOLOGICAL BASIN
3. FEED FORWARD PUMP STATION
4. WAS PUMP STATION
5. PROCESS ELECTRICAL/ BLOWER BUILDING
6. SUBMERGED MEMBRANES
7. MBR ELECTRICAL/ BLOWER BUILDING
   FLOOR LEVEL: ELECTRICAL ROOM
   LOWER LEVEL: MEMBRANE AIR SCOUR BLOWERS
8. RECLAIMED WATER PUMP STATION
9. BIOFILTER (HEADWORKS ODOR CONTROL)
10. GRIT REMOVAL (FUTURE)
11. INFLUENT LIFT STATION EXPANSION
12. AERATION BASIN PHASE 2 EXPANSION (2 MGD)

NORTH

VICTOR VALLEY WASTEWATER RECLAMATION AUTHORITY
APPLE VALLEY WRP - PRELIMINARY DESIGN REPORT

HDR

carollo

SITE LAYOUT

FIGURE ESB.1

The WRP site is adjacent to the existing Assessment District No. 2B Sewage Lift Station located north of Otoe Road (referred to as Otoe Road Lift Station in this PDR document) and this lift station will be configured into the WRP site.

This PDR focuses on the Apple Valley PDR with the Hesperia WRP and the Hesperia Lift Station and Force Main PDRs under separate covers.

3.0 TREATMENT PROCESS

The overall process selected for this project is the Membrane Bioreactor approach to treating wastewater and the WRP will be configured as a scalping plant (producing the design flows at all times) designed to meet the Title 22 requirements for reclaimed water. The reclaimed water will be delivered to off-site percolation basins and used for on-site process and site irrigation. The Apple Valley WRP will be comprised of the following:

- Influent lift station (modifications and expansion to existing Otoe Lift Station)
- Screening - 2 mm rotary drum screens
- Activated sludge process - biological process with flexibility to meet future nitrogen regulations of less then 5 mg/L
- Membrane filtration - submerged hollow fiber membrane filtration system
- Ultraviolet disinfection - using low pressure high output closed vessel technology to reduce overall energy consumption
- Reclaimed water pump station - Deliver water for off-site and on-site uses
- Waste activated sludge - Pumped to downstream section of adjacent collection system.
- Headworks odor control - In ground non-proprietary biofilter for treating of foul air from the screening area

A monolithic type of an arrangement was chosen for this project to encourage common wall construction and promote a low visual profile. Conceptual architectural elevations are provided in Figure ESB-3 and sections of the proposed WRP are provided as Figures ESB-4 and ESB-5. The details of the treatment process are provided in the DIMs within this PDR.

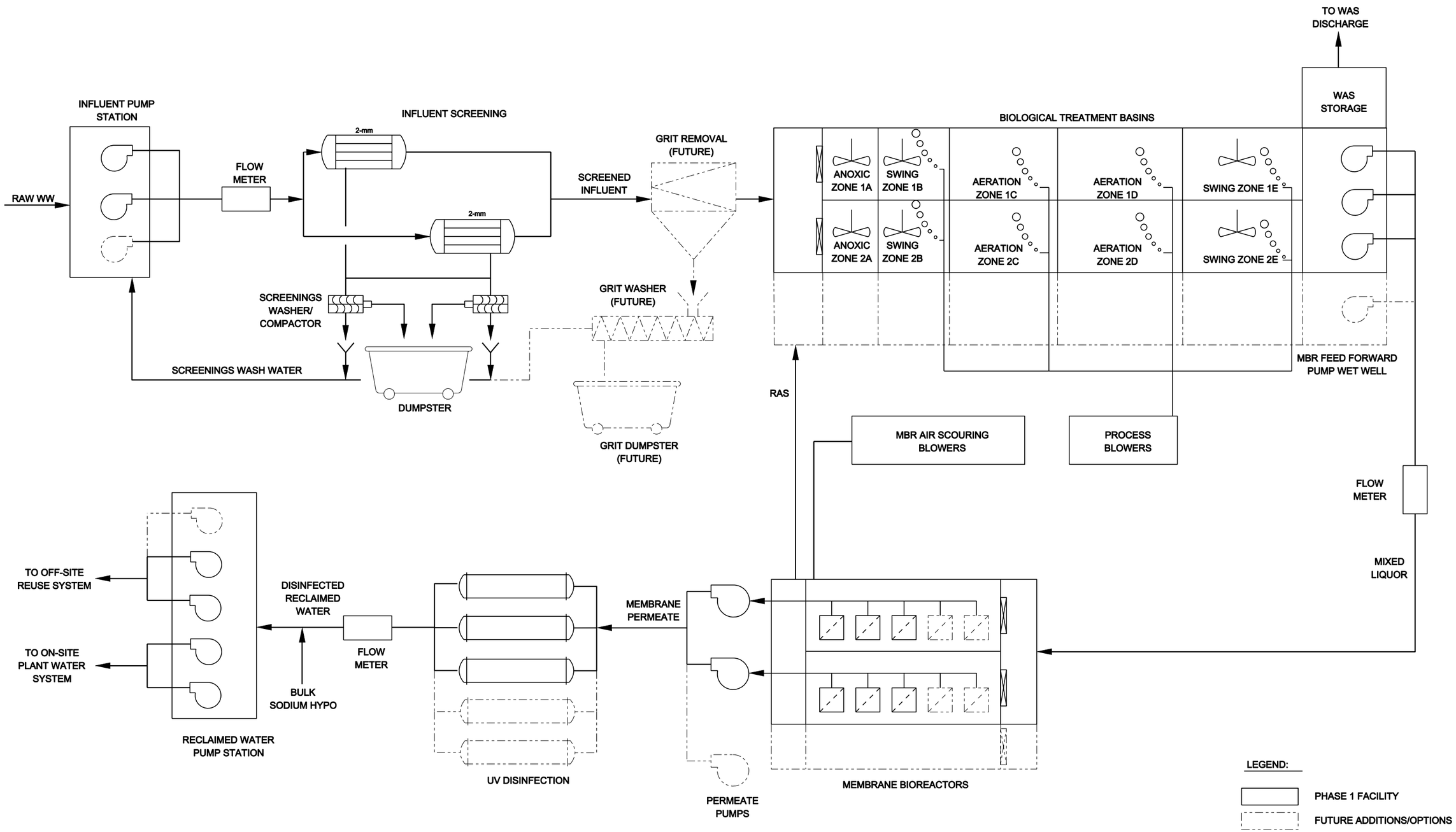

VICTOR VALLEY WASTEWATER RECLAMATION AUTHORITY
APPLE VALLEY WRP - PRELIMINARY DESIGN REPORT

HDR

carollo

PROCESS FLOW DIAGRAM

FIG ESB-2

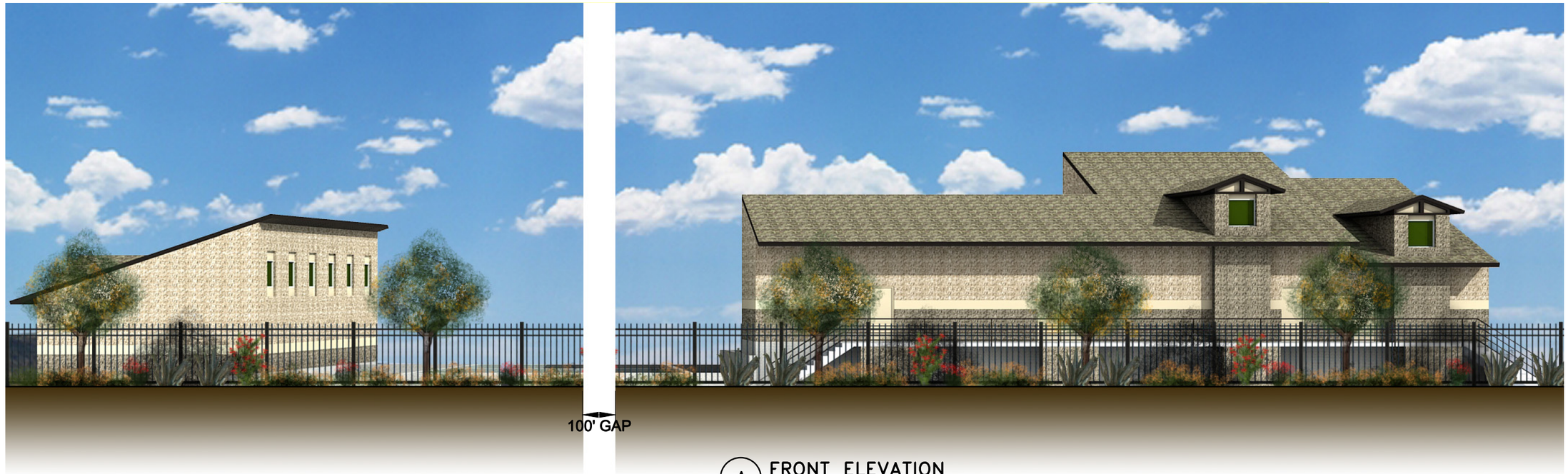

A FRONT ELEVATION
VIEW FROM PARK

B REAR ELEVATION
VIEW FROM STREET

VICTOR VALLEY WASTEWATER RECLAMATION AUTHORITY
APPLE VALLEY WRP - PRELIMINARY DESIGN REPORT

HDR

carollo

CONCEPTUAL ARCHITECTURAL ELEVATIONS

FIGURE ESB-3

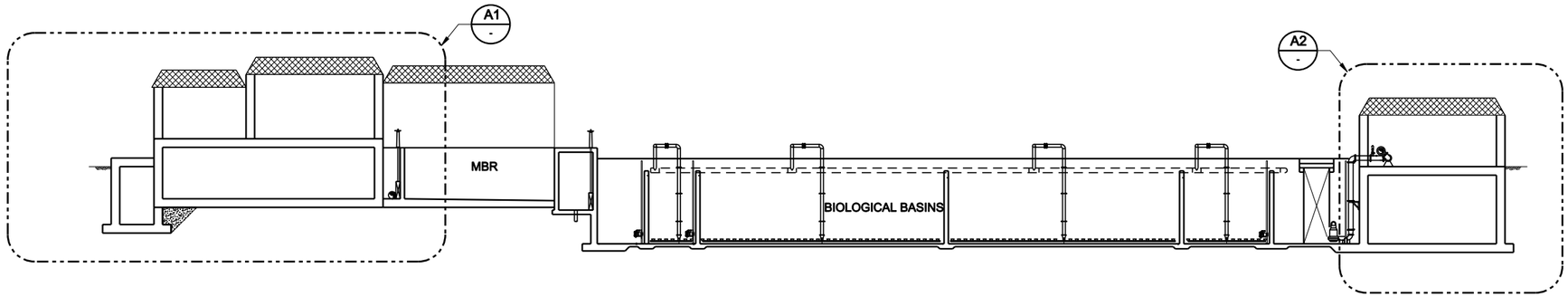

A - SECTION
SCALE: 1/16" = 1'-0"
FILE: 8229A00-SM-0100.dgn
0 2' 4' 6' 12'

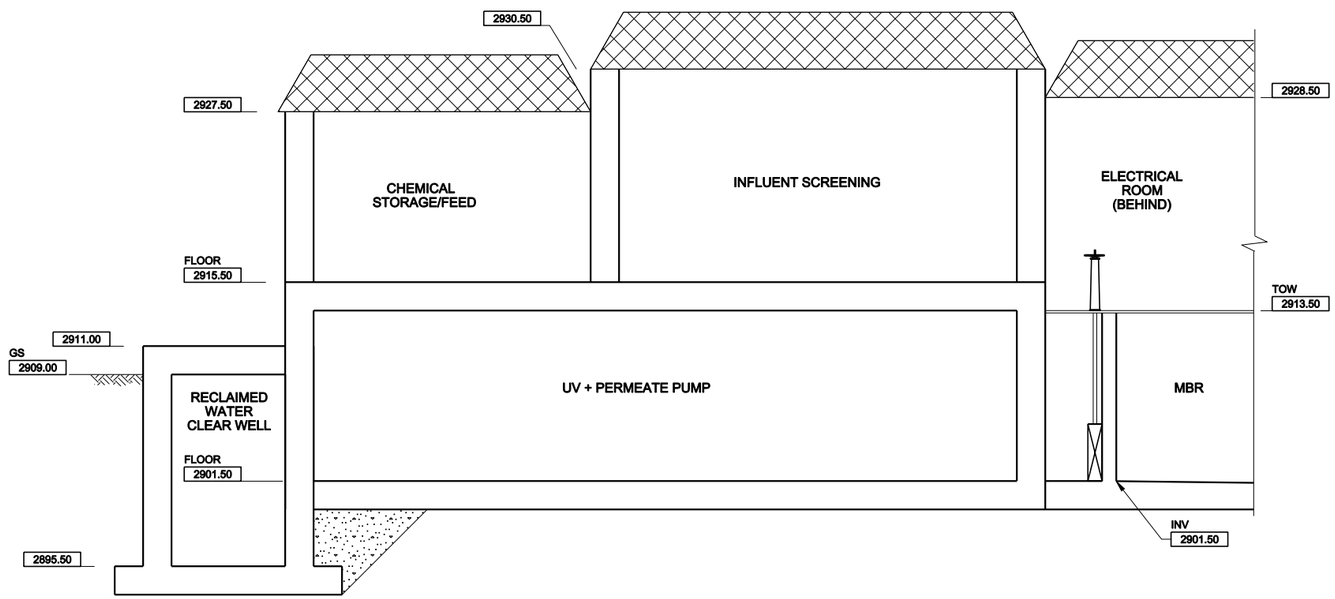

A1 - SECTION
SCALE: 3/16" = 1'-0"
FILE: 8229A00-SM-0100.dgn
0 2' 4' 6' 12'

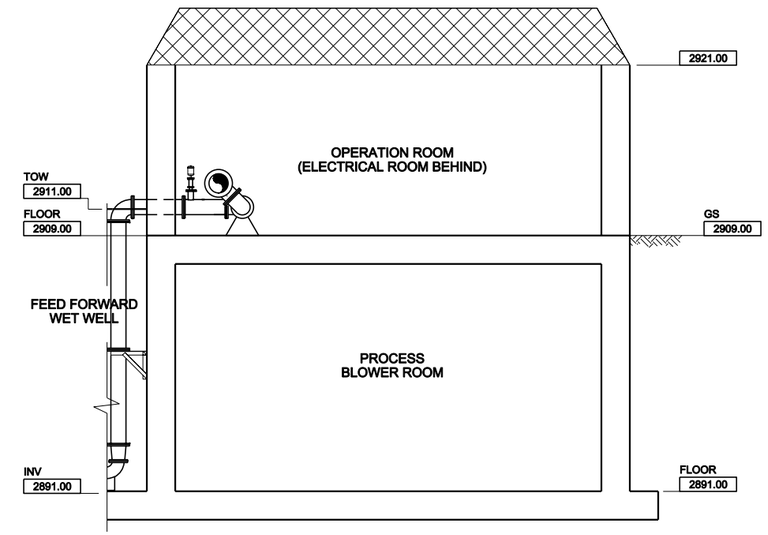

A2 - SECTION
SCALE: 3/16" = 1'-0"
FILE: 8229A00-SM-0100.dgn
0 2' 4' 6' 12'

VICTOR VALLEY WASTEWATER RECLAMATION AUTHORITY
APPLE VALLEY WRP - PRELIMINARY DESIGN REPORT

HDR

carollo

PLANT - SECTION A

FIG ESB-4

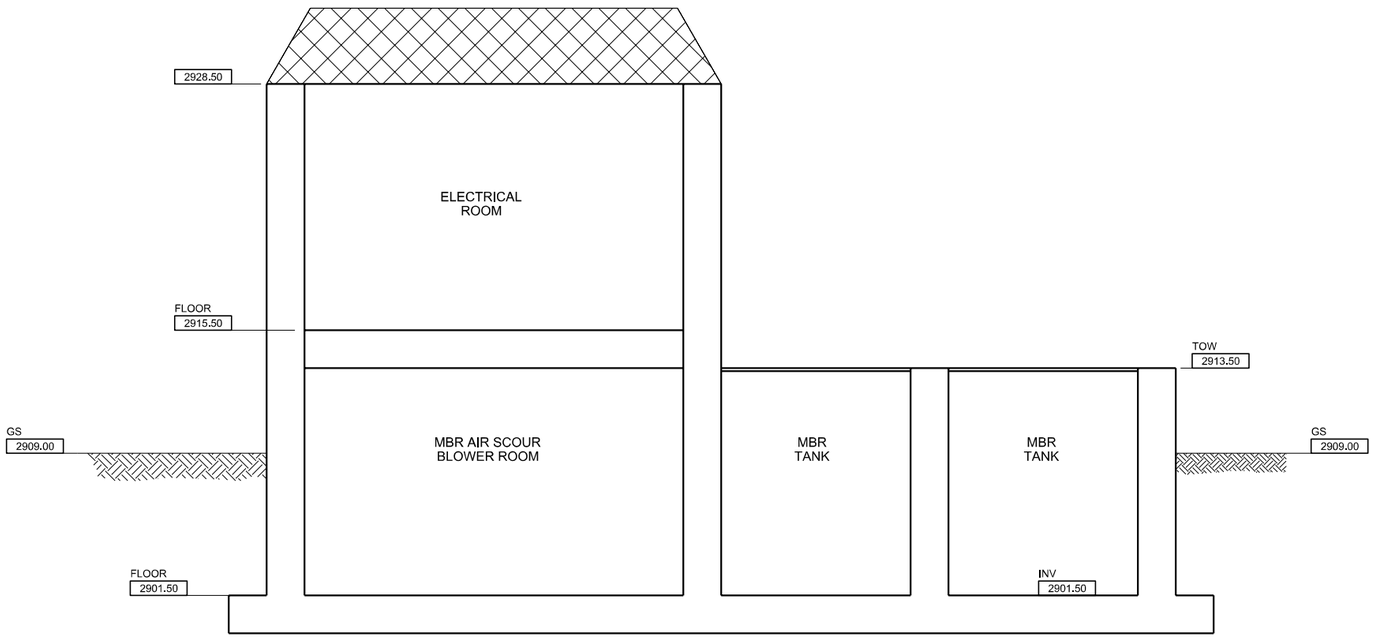

B - **SECTION**

SCALE: 1/4" = 1'-0"
FILE: 8229A00-S-09-300.dgn

0 2' 4' 8'

VICTOR VALLEY WASTEWATER RECLAMATION AUTHORITY
APPLE VALLEY WRP - PRELIMINARY DESIGN REPORT

HDR

carollo

PLANT - SECTION B

FIG ESB-5

4.0 BASIS OF DESIGN

The proposed Apple WRP basis of design is presented in Table ESB.1.

Table ESB.1 Design Criteria Apple Valley WRP Victor Valley Wastewater Reclamation Authority, California			
Design Parameters	**Units**	**Phase 1**	**Phase 2**
FLOW RATES [(1)]			
Design Flow	mgd	1.0	2.0
Minimum Flow	mgd	0.2	0.2
INFLUENT WASTEWATER QUALITY [(2)]			
Total BOD			
Annual Average	mg/L	276	276
Maximum Month	mg/L	414	414
Soluble BOD			
Annual Average	mg/L	119	119
Maximum Month	mg/L	178	178
TSS			
Annual Average	mg/L	274	274
Maximum Month	mg/L	410	410
NH_4-N			
Annual Average	mg/L	29.1	29.1
Maximum Month	mg/L	37.9	37.9
TKN			
Annual Average	mg/L	43.0	43.0
Maximum Month	mg/L	55.9	55.9
Alkalinity			
Annual Average	mg/L	200	200
Maximum Month	mg/L	200	200
Temperature [(3)]			
Annual Average	°C	15	15
Maximum Month	°C	15	15
pH [(4)]			
Annual Average	--	7.0	7.0
Maximum Month	--	7.0	7.0

Table ESB.1 Design Criteria Apple Valley WRP Victor Valley Wastewater Reclamation Authority, California			
Design Parameters	**Units**	**Phase 1**	**Phase 2**
INFLUENT SCREENING			
Screens			
Type of Screen	--	Rotary drum, perforated plate	
Stage of Screening	--	1 stage	
Perforation Diameter	mm	2	
Screen Capacity, each	mgd	2.0	
Number of Screens (duty + standby)	--	1+1	1+1
Screenings Washer/Compactor			
Type of Washer/Compactor	--	Screw press	
Number of Washer/Compactor (duty+ standby)	--	1+1	1+1
Type of Headworks Odor Control System	--	In-ground biofilter	
BIOLOGICAL TREATMENT SYSTEM			
Biological Basins			
Type of Basins	--	Single Pass, multiple zones	
Number of Parallel Trains	--	2	3
Basin Volume, each Train	MG	0.381	0.381
Total Basin Volume	MG	0.763	1.144
Side Water Depth	ft	17 to 19 (5)	
Basin Width (6), each Train	ft	20	
Zone Lengths (6)			
Zone A - Anoxic	ft	10	
Zone B - Swing (Aerobic / Anoxic)	ft	10	
Zone C - Aerobic	ft	55	
Zone D - Aerobic	ft	55	
Zone E - Swing (Aerobic / Anoxic)	ft	20	
Total Basin Length, each Train	ft	150	
Aeration System			
Type of Diffusers	--	Fine bubble, membrane discs	
Blower Air Requirement	scfm	1,800	3,800
Number of Blowers (Duty + Standby)	--	2+1	4+1
Blower Capacity, each	scfm	950	950
Firm Blower Capacity, total	scfm	1,900	3,800
Estimated Discharge Pressure (7)	psig	9.4	9.4

Table ESB.1 Design Criteria Apple Valley WRP Victor Valley Wastewater Reclamation Authority, California			
Design Parameters	**Units**	**Phase 1**	**Phase 2**
Feed Forward Pumping			
Feed Forward Wet Well Width (6)	ft	20	20
Feed Forward Wet Well Length (6)	ft	40	60
Solids Content	%	0.8 (range between 0.7 and 1.0)	
Pump Type	--	Submersible, Centrifugal, Wet Pit	
Pump Motor Control	--	VFD	
Design Flow	mgd	5.0	10.0
Number of Pumps (Duty + Standby)	--	2+1	3+1
Pump Capacity (Number of Pumps @ Capacity)	gpm	2 @ 2,350 gpm 1 @ 1,100 gpm	4 @ 2,350 gpm
Firm Capacity	mgd	5.0	10.2
Total Capacity	mgd	8.4	13.5
MEMBRANE FILTRATION SYSTEM			
Number of Membrane Trains	--	2	2
Number of Membrane Cassettes per Train	--	3	5
Number of Cassette Spaces per Train	--	5	5
Number of Membrane Modules per Cassette (8)	--	42	42
Total Membrane Area, “n” Condition	sq ft	85,680	142,800
Total Membrane Area, “n-1” Condition	sq ft	42,840	71,400
Design Membrane Flux, “n” Condition	gfd	11.7	14.0
Design Flow, “n” Condition	mgd	1.0	2.0
Design Flow, “n-1” Condition	mgd	0.5	1.0
DISINFECTION SYSTEM			
Maximum Total Suspended Solids	mg/L	5	
Type of UV Reactor	--	Closed-vessel	
Type of UV Lamp	--	LP/HO or MP	
Minimum UV Transmittance	%	65	
Design Dose	mJ/cm^2	88	
Number of UV Units (duty + standby) (9)	--		
LP/HO	--	2+1	3+1 or 4+1
MP	--	4+2	8+2
Type of Cleaning	--	Automatic chemical/mechanical	
End of Lamp Life (9)	--	0.80 – 0.90	
Lamp Fouling Factor (9)	--	0.80 - 0.90	

Table ESB.1 Design Criteria Apple Valley WRP Victor Valley Wastewater Reclamation Authority, California			
Design Parameters	**Units**	**Phase 1**	**Phase 2**
RECLAIMED WATER PUMP STATION			
Type of Reclaimed Water Wet Well	--	Concrete clear well	
Type of Reclaimed Water Pump	--	Vertical turbine	
Pump Capacity, each	mgd	1.0	1.0
Number of Reuse Water Pumps (duty + standby)	--	1+1	2+1
Number of Plant Water Pumps (duty + standby)	--	1+1	1+1

Notes:

(1) The sub-regional scalping plant will be designed to produce the design flow at all times.

(2) Values are based on 2007 influent data at the Victor Valley Westside Water Reclamation Plant.

(3) Temperature based on the Westside Water Reclamation Plant Phase III Process Design Summary (HDR, March 1998).

(4) Assumed value.

(5) Normal side water depth is 17 ft, with the ability to operate up to 19 ft during periods of flow equalization.

(6) Inside dimensions

(7) Estimated discharge pressure includes the additional 2 ft of side water depth provided for potential equalization. At 17 ft of SDW, the estimated discharge pressure is 8.5 psig.

(8) Maximum number of modules per cassette is 48.

(9) Number of units, end of lamp life, and lamp fouling factor depend on type of UV lamp and UV manufacturers. See DIM-7B for detail.

5.0 PROJECT COSTS AND SCHEDULE

5.1 Project Costs

The level of accuracy for construction cost estimates varies depending on the level of detail to which the project has been defined. Feasibility studies and master plans represent the lowest level of accuracy, while pre-bid estimates (based on detailed plans and specifications) represent the highest level. The American Association of Cost Engineers International (AACEI) has developed the guidelines in Table 4 for the various types of estimates.

Table ESB.2 AACEI Cost Estimate Classification Matrix for Process Industries
Apple Valley WRP
Victor Valley Wastewater Reclamation Authority, California

		Primary Characteristic	Secondary Characteristic			
		Level of Project Definition	**End Usage**	**Methodology**	**Expected Accuracy Range**	**Preparation Effort**
ANSI Standard Z94.0	AACE Estimate Class	Expressed as % of complete project definition (engineering)	Typical purpose of the estimate	Typical estimating method	Typical variation in low and high ranges (1)	Typical degree of effort relative to least cost index of 1(2)
Order-of-Magnitude Estimate – 30/+50	Class 5	0% to 2%	Concept screening	Capacity factored, parametric models, judgment, or analogy	L: -20% to -50% H: +30% to +100%	1
Budget Estimate – 15/+30	Class 4	1% to 15%	Study or feasibility	Equipment factored, or parametric models	L: -15% to -30% H: +20% to +50%	2 to 4
	Class 3	10% to 40%	Budget, authorization, or control	Semi-detailed unit costs with assembly level line items	L: -10% to -20% H: +10% to +30%	3 to 10
Definitive Estimate – 5/+15	Class 2	30% to 70%	Control or bid/tender	Detailed unit cost with forced detailed take-off	L: -5% to -15% H: +5% to +20T	4 to 20
	Class 1	50% to 100%	Check estimate or bid/tender	Detailed unit cost with detailed take-off	L: -3% to -10% H: +3% to +15%	5 to 100

Notes:

(1) The state of process technology and availability of applicable reference cost data affect the range markedly. The +/- value represents typical percentage variation of actual costs from the cost estimate after application of contingency.

(2) If the cost index value of "1" represents 0.005 percent, then an index value of 100 represents 0.5 percent. Estimate preparation effort is highly dependent upon the size of the project and the quality of estimating data and tools.

(3) Table reprinted with the permission of the American Association of Cost Engineers International (AACEI).

A preliminary design level (Class 3) opinion of probable construction costs is provided in this Design Report. The provided costs will be updated at each review submittal stage during detailed design (i.e., Agency Review, and Final Submittals) to reflect the detailed development at these design stages.

An adjustment of the total direct and indirect costs to the anticipated mid-point of construction is also included. The total estimate is based on the Engineering News Record (ENR) Construction Cost Index (CCI) for the 20-Cities Average, as noted in the estimate. The adjustment for mid-point of construction is based on an annual inflation rate of 5% percent compounded to March 2011.

The construction cost summary also includes an engineering contingency of 20 percent of the total direct cost, as indicated on the cost spreadsheets. Contingencies are specific provisions for unforeseeable elements of costs within the defined project scope, and are also included to cover known, but (at this time) undefined requirements for the facilities. Items such as variations in the project configuration developed during the detailed design phase, unforeseen site conditions encountered during construction, and reasonable project changes during construction are part of the contingency.

A summary of the Construction Costs are provided in Table ESB.3. The supporting cost estimate worksheets are provided at the end of the Executive Summary.

Table ESB.3 Opinion of Probable Construction Costs
Apple Valley WRP
Victor Valley Wastewater Reclamation Authority, California

Project	Total Construction Cost (Millions)
Apple Valley WRP	$22.6

Note:
(1) Total construction cost is escalated to the projected mid-point of construction of March 2011.

5.2 Project Schedule

The preliminary project schedule is based upon feedback from VVWRA on the timing of the project and the anticipated construction duration and is presented in Table ESB.4.

Table ESB.4 Project Schedule
Apple Valley WRP
Victor Valley Wastewater Reclamation Authority, California

Activity	Duration
Detailed Design (1)	9 months
Bidding Phase (2)	3 months
Construction Phase (3)	18 months
Environmental Impact Report Schedule (4)	10 months (March 2010 completion)

Notes:

(1) Detail design starts upon Notice to Proceed.

(2) Bidding phase starts following detail design completion. The time of bidding phase is contingent upon funding.

(3) Construction starts following bidding phase.

(4) Environmental Impact Report starts in May 2009.

PRELIMINARY COST ESTIMATE WORKSHEETS

PROJECT SUMMARY

Project:	**VVWRA/Hesperia/Apple Valley - Preliminary Estimate**	**Estimate Class:**	**3**
Job #:	**8229A.00**	**PIC:**	**J Hagstrom**
Location:	**Town of Apple Valley, CA**	**PM:**	**A Gilmore**
Zip Code:	**92307**	**Date:**	**11/25/09**
		By:	**Z Liu**
		Reviewed:	**TD 20090728**

NO.	DESCRIPTION			TOTAL
01	GENERAL CONDITION			$2,625,000
02	INFLUENT LIFT STATION			$333,526
03	SCREENING			$4,552,241
04	AERATION BASIN			$2,605,492
05	MBR			$3,715,042
06	UV			$950,700
07	EFF PS			$283,268
08	SUPPLEMENTAL FACILITY			$54,648
		TOTAL DIRECT COST		**$15,119,917**
	Contingency		20.0%	$3,023,983
		Subtotal		**$18,143,900**
	General Contractor Overhead, Profit & Risk		10.0%	$1,814,390
		Subtotal		**$19,958,290**
	Escalation to Mid-Point		8.5%	$1,689,795
		Subtotal		**$21,648,085**
	Sales Tax (Based on Apple Valley tax)		8.8%	$947,104
		Subtotal		**$22,595,188**
	Bid Market Allowance		0.0%	$0
	TOTAL ESTIMATED CONSTRUCTION COST			**$22,595,188**
	Engineering, Legal & Administration Fees		10.0%	$2,259,519
	Owner's Reserve for Change Orders		5.0%	$1,129,759
	TOTAL ESTIMATED PROJECT COST			**$25,984,467**

The cost estimate herein is based on our perception of current conditions at the project location. This estimate reflects our professional opinion of accurate costs at this time and is subject to change as the project design matures. Carollo Engineers have no control over variances in the cost of labor, materials, equipment; nor services provided by others, contractor's means and methods of executing the work or of determining prices, competitive bidding or market conditions, practices or bidding strategies. Carollo Engineers cannot and does not warrant or guarantee that proposals, bids or actual construction costs will not vary from the costs presented as shown.

RECAP MATRIX

Project:VVWRA/Hesperia/Apple Valley - Preliminary Estimate
Job #:8229A.00
Location:Town of Apple Valley, CA

Estimate Class: 3

Capacity:

Connected HP:

Date : November 25, 2009

By: Z Liu

SPEC. DIVISION/ ELEMENT DESCRIPTION	DIV. 01 GEN REQTS	DIV. 02 SITE WORK	DIV. 03 CONC	DIV. 04 MSNRY	DIV. 05 METALS	DIV. 06 WOOD & Plastics	DIV. 07 MOIST PROTN	DIV. 08 DOORS & WDOS	DIV. 09 FINISHES	DIV. 10 SPECIAL-TIES	DIV. 11 EQUIP	DIV. 12 FURN	DIV. 13 SPECIAL CONST	DIV. 14 CONVEY	DIV. 15 PLUMBG & MECH	DIV. 16 ELECT/ I & C	Div 17 INST. & CONT.	ELEMENT TOTALS	ELEMENT % of Total
01 GENERAL CONDITION	$1,625,000	$1,000,000																$2,625,000	**17.36%**
02 INFLUENT LIFT STATION			$128,968						$30,000		$105,793				$21,159	$26,448	$21,159	$333,526	**2.21%**
03 SCREENING			$40,353	$38,389	$100,000	$30,000		$20,000	$30,000		$770,000		$2,000,000		$554,000	$554,000	$415,500	$4,552,241	**30.11%**
04 AERATION BASIN			$839,383	$70,314	$100,000	$30,000		$20,000	$30,000		$752,390		$150,000		$175,259	$219,073	$219,073	$2,605,492	**17.23%**
05 MBR			$173,261	$115,898	$100,000	$30,000		$20,000	$30,000		$1,908,000		$59,202		$393,440	$491,801	$393,440	$3,715,042	**24.57%**
06 UV									$30,000		$594,000				$59,400	$148,500	$118,800	$950,700	**6.29%**
07 EFF PS			$66,484						$30,000		$120,506				$24,101	$24,101	$18,076	$283,268	**1.87%**
08 SUPPLEMENTAL FACILITY											$36,432				$5,465	$7,286	$5,465	$54,648	**0.36%**
Total Direct Cost	**1,625,000**	**1,000,000**	**1,248,447**	**224,600**	**300,000**	**90,000**	**0**	**60,000**	**180,000**	**0**	**4,287,121**	**0**	**2,209,202**	**0**	**1,232,824**	**1,471,210**	**1,191,513**	**$15,119,917**	
Percent of Total	**10.75%**	**6.61%**	**8.26%**	**1.49%**	**1.98%**	**0.60%**	**0.00%**	**0.40%**	**1.19%**	**0.00%**	**28.35%**	**0.00%**	**14.61%**	**0.00%**	**8.15%**	**9.73%**	**7.88%**	**100.00%**	

COMMENTS / NOTES

1. Note that the above costs DO NOT include all of the applicable mark-ups for the total construction or project cost. Refer to the SUMMARY for these values.

DETAILED COST ESTIMATE

Project: VVWRA/Hesperia/Apple Valley - Preliminary Estimate
Job #: 8229A.00
Location: Town of Apple Valley, CA
Element: 01 GENERAL CONDITION

Date : 11/25/09
By : Z Liu
Reviewed: TD 20090728

SPEC. NO.	DESCRIPTION	QUANTITY	UNIT	UNIT COST	SUBTOTAL	TOTAL
	Division 01 - General Conditions					
01000	General Conditions	1.00	LS	$1,625,000.00	$1,625,000	
	Total					**$1,625,000**
	Division 02 - Site Construction					
02000	Site Work	1.00	LS	$1,000,000.00	$1,000,000	
	Total					**$1,000,000**
	Grand Total					**$2,625,000**

carollo
Engineers...Working Wonders With Water™

DETAILED COST ESTIMATE

Project: VVWRA/Hesperia/Apple Valley - Preliminary Estimate
Job #: 8229A.00
Location: Town of Apple Valley, CA
Element: 02 INFLUENT LIFT STATION

Date : 11/25/09
By : Z Liu
Reviewed: TD 20090728

SPEC. NO.	DESCRIPTION	QUANTITY	UNIT	UNIT COST	SUBTOTAL	TOTAL
	Division 03 - Concrete					
03300	18" Straight Wall >8' High	102.67	CY	$720.39	$73,962	
03300	18" Straight Wall >8' High	54.44	CY	$720.39	$39,218	
03300	12" Flat Non-Formed S.O.G.	42.78	CY	$274.38	$11,738	
03300	12" Edge Forms, Slab On Grade, Add	35.00	LF	$9.68	$339	
03300	12" Elevated Slab To 20'	8.15	CY	$455.27	$3,710	
	Total					**$128,968**
	Division 09 - Finishes					
09000	Finishes	1.00	LS	$30,000.00	$30,000	
	Total					**$30,000**
	Division 11 - Equipment					
11312	50Hp Horizontal Centrifugal Pump	2.00	EA	$52,896.47	$105,793	
	Total					**$105,793**
	Division 15 - Mechanical					
15000	Plumbing and Mechanical - ILS	0.20	Perct	$105,792.93	$21,158.59	
	Total					**$21,159**
	Division 16 - Electrical					
16000	Electrical - ILS	0.25	Perct	$105,792.93	$26,448.23	
	Total					**$26,448**
	Division 17 - Instrumentation and Controls					
17000	Instrumentation and Controls - ILS	0.20	Perct	$105,792.93	$21,158.59	
	Total					**$21,159**
	Grand Total					**$333,526**

carollo
Engineers...Working Wonders With Water™

DETAILED COST ESTIMATE

Project: VVWRA/Hesperia/Apple Valley - Preliminary Estimate
Job #: 8229A.00
Location: Town of Apple Valley, CA
Element: 03 SCREENING

Date : 11/25/09
By : Z Liu
Reviewed: TD 20090728

SPEC. NO.	DESCRIPTION	QUANTITY	UNIT	UNIT COST	SUBTOTAL	TOTAL
	Division 03 - Concrete					
03000	Concrete Roofing	1.00	LS	$10,000.00	$10,000	
03300	12" Elevated Slab To 20'	66.67	CY	$455.27	$30,353	
	Total					**$40,353**
	Division 04 - Masonry					
04220	Concrete Block, Split Face 12"	900.00	SF	$18.28	$16,452	
04220	Concrete Block, Split Face 12"	1,200.00	SF	$18.28	$21,936	
	Total					**$38,389**
	Division 05 - Metals					
05000	Metal	1.00	LS	$100,000.00	$100,000	
	Total					**$100,000**
	Division 06 - Wood and Plastics					
06000	Wood and Plastics	1.00	LS	$30,000.00	$30,000	
	Total					**$30,000**
	Division 08 - Doors and Windows					
08000	Doors and Windows	1.00	LS	$20,000.00	$20,000	
	Total					**$20,000**
	Division 09 - Finishes					
09000	Finishes	1.00	LS	$30,000.00	$30,000	
	Total					**$30,000**
	Division 11 - Equipment					
11332	Fine Screens	2.00	EA	$256,200.00	$512,400	
11333	Screenings Washer/Compactor	2.00	EA	$128,800.00	$257,600	
	Total					**$770,000**
	Division 13 - Special Construction					
13329	Biofilter System	1.00	LS	$2,000,000.00	$2,000,000	
	Total					**$2,000,000**
	Division 15 - Mechanical					
15000	Plumbing and Mechanical - IFSN	0.20	Perct	$2,770,000.00	$554,000.00	
	Total					**$554,000**
	Division 16 - Electrical					
16000	Electrical	0.20	Perct	$2,770,000.00	$554,000	
	Total					**$554,000**
	Division 17 - Instrumentation and Controls					
17000	Instrumentation and Controls	0.15	Perct	$2,770,000.00	$415,500	
	Total					**$415,500**
	Grand Total					**$4,552,241**

DETAILED COST ESTIMATE

Project: VVWRA/Hesperia/Apple Valley - Preliminary Estimate
Job #: 8229A.00
Location: Town of Apple Valley, CA
Element: 04 AERATION BASIN

Date : 11/25/09
By : Z Liu
Reviewed: TD 20090728

SPEC. NO.	DESCRIPTION	QUANTITY	UNIT	UNIT COST	SUBTOTAL	TOTAL
	Division 03 - Concrete					
03000	Concrete Roofing	1.00	LS	$10,000.00	$10,000	
03300	12" Flat Non-Formed S.O.G.	316.67	CY	$274.38	$86,889	
03300	12" Edge Forms, Slab On Grade, Add	190.00	LF	$9.68	$1,839	
03300	18" Straight Wall >8' High	422.22	CY	$720.39	$304,163	
03300	18" Straight Wall >8' High	133.33	CY	$720.39	$96,050	
03300	18" Straight Wall >8' High	211.11	CY	$720.39	$152,081	
03300	18" Straight Wall >8' High	188.89	CY	$720.39	$136,074	
03300	18" Straight Wall >8' High	66.67	CY	$720.39	$48,028	
03300	12" Flat Non-Formed S.O.G.	14.81	CY	$274.38	$4,064	
03300	12" Edge Forms, Slab On Grade, Add	20.00	LF	$9.68	$194	
	Total					**$839,383**
	Division 04 - Masonry					
04220	Concrete Block, Split Face 12"	1,740.00	SF	$18.28	$31,808	
04220	Concrete Block, Split Face 12"	1,740.00	SF	$18.28	$31,808	
04220	Standard Concrete Block, 12"	390.00	SF	$17.17	$6,698	
	Total					**$70,314**
	Division 05 - Metals					
05000	Metal	1.00	LS	$100,000.00	$100,000	
	Total					**$100,000**
	Division 06 - Wood and Plastics					
06000	Wood and Plastics	1.00	LS	$30,000.00	$30,000	
	Total					**$30,000**
	Division 08 - Doors and Windows					
08000	Doors and Windows	1.00	LS	$20,000.00	$20,000	
	Total					**$20,000**
	Division 09 - Finishes					
09000	Finishes	1.00	LS	$30,000.00	$30,000	
	Total					**$30,000**
	Division 11 - Equipment					
11293	Slide Gate, 36" X 36"	2.00	EA	$13,048.23	$26,096	
11293	Slide Gate, 48" X 48"	2.00	EA	$16,385.65	$32,771	
11312	10Hp Submersible Sump Pump	2.00	EA	$22,536.47	$45,073	
11312	15Hp Submersible Sump Pump	1.00	EA	$32,656.47	$32,656	
11312	30Hp Submersible Sump Pump	2.00	EA	$42,776.47	$85,553	
11317	Submersible Mixers - High Speed	6.00	EA	$16,698.00	$100,188	
11376	Rotary Positive Displacement Blower	4.00	EA	$51,600.00	$206,400	
11378	Membrane Disk Fine Bubble Diffused Aeration System	1.00	LS	$223,651.99	$223,652	
	Total					**$752,390**
	Division 13 - Special Construction					
13000	Aluminum Aeration Basin Cover	1.00	LS	$150,000.00	$150,000.00	
	Total					**$150,000**
	Division 15 - Mechanical					
15000	Plumbing and Mechanical - AB	0.20	Perct	$876,293.62	$175,258.72	
	Total					**$175,259**
	Division 16 - Electrical					
16000	Electrical	0.25	Perct	$876,293.62	$219,073.40	
	Total					**$219,073**
	Division 17 - Instrumentation and Controls					
17000	Instrumentation and Controls	0.25	Perct	$876,293.62	$219,073.40	
	Total					**$219,073**
	Grand Total					**$2,605,492**

carollo
Engineers...Working Wonders With Water™

DETAILED COST ESTIMATE

Project: VVWRA/Hesperia/Apple Valley - Preliminary Estimate
Job #: 8229A.00
Location: Town of Apple Valley, CA
Element: 05 MBR

Date : 11/25/09
By : Z Liu
Reviewed: TD 20090728

SPEC. NO.	DESCRIPTION	QUANTITY	UNIT	UNIT COST	SUBTOTAL	TOTAL
	Division 03 - Concrete					
03000	Concrete Roofing	1.00	LS	$10,000.00	$10,000	
03300	12" Flat Non-Formed S.O.G.	74.07	CY	$274.38	$20,324	
03300	12" Edge Forms, Slab On Grade, Add	50.00	LF	$9.68	$484	
03300	18" Straight Wall >8' High	53.33	CY	$720.39	$38,418	
03300	18" Straight Wall >8' High	23.33	CY	$720.39	$16,807	
03300	18" Straight Wall >8' High	26.67	CY	$720.39	$19,213	
03300	12" Sloped Slab On Grade (To 30%)	29.63	CY	$399.98	$11,851	
03300	12" Sloped S.O.G. Edge Forms (To 30%), Add	40.00	LF	$10.88	$435	
03300	12" Elevated Slab To 20'	74.07	CY	$455.27	$33,722	
03300	12" Flat Non-Formed S.O.G.	29.63	CY	$274.38	$8,130	
03300	12" Edge Forms, Slab On Grade, Add	40.00	LF	$9.68	$387	
03300	12" Elevated Slab To 20'	29.63	CY	$455.27	$13,490	
	Total					**$173,261**
	Division 04 - Masonry					
04220	Concrete Block, Split Face 12"	1,040.00	SF	$18.28	$19,012	
04220	Concrete Block, Split Face 12"	280.00	SF	$18.28	$5,119	
04220	Concrete Block, Split Face 12"	1,560.00	SF	$18.28	$28,517	
04220	Concrete Block, Split Face 12"	520.00	SF	$18.28	$9,506	
04220	Concrete Block, Split Face 12"	640.00	SF	$18.28	$11,699	
04220	Concrete Block, Split Face 12"	1,000.00	SF	$18.28	$18,280	
04220	Concrete Block, Split Face 12"	1,000.00	SF	$18.28	$18,280	
04220	Concrete Block, Split Face 12"	300.00	SF	$18.28	$5,484	
	Total					**$115,897**
	Division 05 - Metals					
05000	Metal	1.00	LS	$100,000.00	$100,000	
	Total					**$100,000**
	Division 06 - Wood and Plastics					
06000	Wood and Plastics	1.00	LS	$30,000.00	$30,000	
	Total					**$30,000**
	Division 08 - Doors and Windows					
08000	Doors and Windows	1.00	LS	$20,000.00	$20,000	
	Total					**$20,000**
	Division 09 - Finishes					
09000	Finishes	1.00	LS	$30,000.00	$30,000	
	Total					**$30,000**
	Division 11 - Equipment					
11500	Membrane Equipment System (Loose Ship)	1.00	LS	$1,908,000.00	$1,908,000	
	Total					**$1,908,000**
	Division 13 - Special Construction					
13209	Back Pulse Tank	1.00	LS	$59,202.00	$59,202	
	Total					**$59,202**
	Division 15 - Mechanical					
15000	Plumbing and Mechanical - MBR	0.20	Perct	$1,967,202.00	$393,440.40	
	Total					**$393,440**
	Division 16 - Electrical					
16000	Electrical	0.25	Perct	$1,967,202.00	$491,800	
	Total					**$491,800**
	Division 17 - Instrumentation and Controls					
17000	Instrumentation and Controls	0.20	Perct	$1,967,202.00	$393,440	
	Total					**$393,440**
	Grand Total					**$3,715,042**

carollo
Engineers...Working Wonders With Water™

DETAILED COST ESTIMATE

Project: VVWRA/Hesperia/Apple Valley - Preliminary Estimate
Job #: 8229A.00
Location: Town of Apple Valley, CA
Element: 06 UV

Date : 11/25/09
By : Z Liu
Reviewed: TD 20090728

SPEC. NO.	DESCRIPTION	QUANTITY	UNIT	UNIT COST	SUBTOTAL	TOTAL
	Division 09 - Finishes					
09000	Finishes	1.00	LS	$30,000.00	$30,000	
	Total					**$30,000**
	Division 11 - Equipment					
11287	UV Disinfection System	1.00	LS	$594,000.00	$594,000	
	Total					**$594,000**
	Division 15 - Mechanical					
15000	Plumbing and Mechanical - UV	0.10	Perct	$594,000.00	$59,400.00	
	Total					**$59,400**
	Division 16 - Electrical					
16000	Electrical	0.25	Perct	$594,000.00	$148,500	
	Total					**$148,500**
	Division 17 - Instrumentation and Controls					
17000	Instrumentation and Controls	0.20	Perct	$594,000.00	$118,800	
	Total					**$118,800**
	Grand Total					**$950,700**

carollo
Engineers...Working Wonders With Water™

DETAILED COST ESTIMATE

Project: VVWRA/Hesperia/Apple Valley - Preliminary Estimate
Job #: 8229A.00
Location: Town of Apple Valley, CA
Element: 07 EFF PS

Date : 11/25/09
By : Z Liu
Reviewed: TD 20090728

SPEC. NO.	DESCRIPTION	QUANTITY	UNIT	UNIT COST	SUBTOTAL	TOTAL
	Division 03 - Concrete					
03300	18" Straight Wall >8' High	68.89	CY	$720.39	$49,628	
03300	12" Flat Non-Formed S.O.G.	14.81	CY	$274.38	$4,064	
03300	12" Edge Forms, Slab On Grade, Add	40.00	LF	$9.68	$387	
03300	18" Straight Wall >8' High	17.22	CY	$720.39	$12,405	
	Total					**$66,484**
	Division 09 - Finishes					
09000	Finishes	1.00	LS	$30,000.00	$30,000	
	Total					**$30,000**
	Division 11 - Equipment					
11312	20Hp Vertical Turbine Pump	2.00	EA	$32,656.47	$65,313	
11312	10Hp Vertical Turbine Pump	2.00	EA	$27,596.47	$55,193	
	Total					**$120,506**
	Division 15 - Mechanical					
15000	Plumbing and Mechanical - EPS	0.20	Perct	$120,505.87	$24,101.17	
	Total					**$24,101**
	Division 16 - Electrical					
16000	Electrical	0.20	Perct	$120,505.87	$24,101	
	Total					**$24,101**
	Division 17 - Instrumentation and Controls					
17000	Instrumentation and Controls	0.15	Perct	$120,505.87	$18,076	
	Total					**$18,076**
	Grand Total					**$283,268**

carollo
Engineers...Working Wonders With Water™

DETAILED COST ESTIMATE

Project: VVWRA/Hesperia/Apple Valley - Preliminary Estimate
Job #: 8229A.00
Location: Town of Apple Valley, CA
Element: 08 SUPPLEMENTAL FACILITY

Date : 11/25/09
By : Z Liu
Reviewed: TD 20090728

SPEC. NO.	DESCRIPTION	QUANTITY	UNIT	UNIT COST	SUBTOTAL	TOTAL
	Division 11 - Equipment					
11242	Bulk Sodium Hypochlorite Pumps	4.00	EA	$9,108.00	$36,432	
	Total					**$36,432**
	Division 15 - Mechanical					
15000	Plumbing and Mechanical - SF	0.15	Perct	$36,432.00	$5,464.80	
	Total					**$5,465**
	Division 16 - Electrical					
16000	Electrical	0.20	Perct	$36,432.00	$7,286	
	Total					**$7,286**
	Division 17 - Instrumentation and Controls					
17000	Instrumentation and Controls	0.15	Perct	$36,432.00	$5,465	
	Total					**$5,465**
	Grand Total					**$54,648**

DESIGN INFORMATION MEMORANDUM NO. 1B

DESIGN FLOWS AND LOADINGS

Project Name:	Hesperia and Apple Valley Scalping WRPs, Raw Sewage Lift Station and Force Mains		
Client:	Victor Valley Wastewater Reclamation Authority	**Date:**	December 2009

INTRODUCTION

The purpose of this Design Information Memorandum (DIM) No. 1B is to define the design influent flows and loadings and effluent quality criteria for the Apple Valley Water Reclamation Plant (WRP). The criteria presented in this DIM No. 1B serves as the basis for the design of the treatment process and facilities of the Apple Valley WRP.

DESIGN FLOW QUANTITIES

The Apple Valley WRP will be a sub-regional scalping facility to treat a portion of wastewater from its local collection system. The WRP will be designed to treat plant throughput capacities of 1.0 million gallon per day (mgd) in Phase 1, expandable to 2.0 mgd in Phase 2. No further expansions beyond 2.0 mgd are anticipated at the Apple Valley WRP site.

The plant will be designed to produce the design flow at all times. Therefore, the WRP will bypass flows in the interceptor larger than the design flow of 1.0 mgd (Phase 1). Flow equalization may be required in order to maintain reclaimed water production at the design flow at times when flows in the interceptor are smaller than 1.0 mgd (Phase 1).

At the time of this memorandum, the diurnal information for the Otoe Road Lift Station was not available for analysis. The diurnal flow profile at the Apple Valley WRP site would allow an evaluation of the availability of raw wastewater flows in the interceptor, in order to produce the required reclaimed water flow of 1.0 mgd under Phase 1.

INFLUENT FLOW CHARACTERISTICS

The influent wastewater quality characteristics define the constituent loadings to the Apple Valley WRP. The influent wastewater design criteria characteristics include total biochemical oxygen demand (BOD), soluble BOD, total suspended solids (TSS), ammonium-nitrogen (NH_4-N), total kjeldahl nitrogen (TKN), alkalinity, and temperature.

Review of Existing Wastewater Quality Data

Wastewater quality data was received for review and analysis. Wastewater samples are regularly collected at the Apple Valley Metering Station. The sampling point is located at the point of discharge to the VVWRA interceptor going to the Westside WRP. Therefore, the data is inclusive of all contributions (domestic, commercial, industrial) in each City.

Daily composite samples at the Metering Station are collected once every month, and analyzed for various constituents including Chemical Oxygen Demand (COD), Biochemical Oxygen Demand (BOD), Total Suspended Solids (TSS), and ammonia (NH_3-N), among others. Data between July 2005 and August 2009 was made available for analysis.

Appendix 1B includes a detailed summary of the historical data reviewed for this analysis, including basic statistics and charts for the different constituents relevant for the design of the wastewater treatment process.

A summary of wastewater quality design criteria for the Westside WRP was also received for analysis. The design wastewater characteristics for the Westside WRP are based on 2007 plant data, and include annual average day and maximum month average day constituent concentrations.

Table 1B.1 shows a comparison between the average constituent concentrations for the Westside WRP and Apple Valley Metering Station. COD, BOD, and TSS average concentrations for Apple Valley are based on data between July 2005 and August 2009. Ammonia averages for Apple Valley are based on data between September 2007 and August 2009. Ammonia values between July 2005 and September 2006 were not used in the calculation of the averages because the values are believed to be overestimated due to inaccuracies of the chemical analysis method used during that timeframe, based on discussions with VVWRA laboratory staff. After close review of the data, ammonia values between October 2006 and August 2007 were also excluded from the overall averages, due to the marked difference between values before and after August 2007.

Constituent concentrations at Apple Valley are lower than the wastewater characteristics at the Westside WRP. Reasons for these differences are attributed to the relatively lower contributions of commercial and industrial discharges in Apple Valley.

Wastewater in Apple Valley is mainly from domestic flows with very little contributions from commercial establishments and industry, according to VVWRA compliance staff. There is no wastewater master plan available for Apple Valley to confirm the relative contributions of commercial and industrial flows in the collection system.

Table 1B.1 Comparison of Average Influent Wastewater Quality Characteristics
Apple Valley WRP Design Information Memoranda
Victor Valley Wastewater Reclamation Authority, California

Constituent	Unit	Westside WRP (1)	Apple Valley (2)
Total COD	mg/L	-	641
Total BOD	mg/L	305	276
Soluble BOD	mg/L	130	-
TSS	mg/L	355	274
NH_3-N (3)	mg/L	21	29.1
TKN	mg/L	31	-
Alkalinity	mg/L	200	-
Temperature (4)	°C	15 - 28	-

Notes:
(1) Values are based on 2007 influent data at the Victor Valley Westside WRP.
(2) Values based on 2005 – 2009 historical data at the Apple Valley Metering Station. One sample per month is reported.
(3) Values based on historical data between September 2007 and August 2009.
(4) Temperature based on the Westside WRP Phase III Process Design Summary (HDR, March 2008).

Design Influent Wastewater Characteristics

Table 1B.2 summarizes the design wastewater characteristics for the Apple Valley WRP. The proposed design influent wastewater characteristics are based on the historical wastewater quality information for Apple Valley, discussed in the previous section.The Apple Valley WRP is designed as a scalping facility, and a maximum month flow (hydraulic) peaking factor has not been considered in the design. However, constituent loadings are expected to vary throughout the year. Increased constituent loadings result in maximum month loading conditions, which are further referred to as MMADF conditions throughout this report.

The maximum month load peaking factors for BOD, TSS, and TKN are 1.5, 1.5, and 1.3, respectively. The design maximum month peaking factors for constituent concentrations are based on the wastewater quality criteria used at the Westside WRP. Because only one sample per month is reported for the Apple Valley Metering Station, a maximum month peaking factor could not be calculated from the historical data.

It is recommended that once the Apple Valley WRP is constructed and operating, regular influent sampling be conducted to verify the design values, and to establish a long-term history of influent wastewater characteristics for future expansions.

Table 1B.2 Design Influent Wastewater Quality Characteristics
Apple Valley WRP Design Information Memoranda
Victor Valley Wastewater Reclamation Authority, California

Constituent	Unit	Annual Average	Maximum Month(1)
Total COD	mg/L	641	962
Total BOD	mg/L	276	414
Soluble BOD (2)	mg/L	119	178
TSS	mg/L	274	410
NH_3-N	mg/L	29.1	37.9
TKN (3)	mg/L	43.0	55.9
Alkalinity (4)	mg/L	200	200
Temperature (5)	°C	15	15
pH (5)	--	7.0	7.0

Notes:
(1) Maximum month peaking factors of 1.5 (BOD, COD, TSS) and 1.3 (TKN, NH_4-N) based on 2007 influent data at the Victor Valley Westside WRP.
(2) Soluble BOD fraction of 43% based on 2007 influent data at the Victor Valley Westside WRP.
(3) TKN based on ammonia to TKN ratio for the 2007 influent data at the Victor Valley Westside WRP.
(4) Based on 2007 influent data at the Victor Valley Westside WRP.
(5) Temperature based on the Westside WRP Phase III Process Design Summary (HDR, March 2008).

EFFLUENT QUALITY GOALS

Anticipated effluent quality will be based on VVWRA Request for Proposal Attachment A - Effluent Limitations and Discharge Specifications, California Department of Public Health Title 22 Code of Regulations, Water Recycling Criteria, and August 5, 2008 Draft Regulation for Groundwater Recharge Reuse. Table 1B.3 lists effluent quality criteria based on different regulations, along with the recommended effluent quality design criteria.

Table 1B.3 Reclaimed Water Quality Standards and Recommended Design Criteria
Apple Valley WRP Design Information Memoranda
Victor Valley Wastewater Reclamation Authority, California

Parameter	VVWRA RFP Attachment A Effluent Limit	Title 22 Water Recycling Criteria	Draft Regulation for Groundwater Recharge Reuse	Recommended Effluent Design Criteria
pH	6.5 - 8.5	--	--	6.5 - 8.5
BOD_5 (mg/L)		--	--	
Avg. Monthly	10			10
Avg. Weekly	15			15
Max. Daily	30			30

Table 1B.3 Reclaimed Water Quality Standards and Recommended Design Criteria
Apple Valley WRP Design Information Memoranda
Victor Valley Wastewater Reclamation Authority, California

Parameter	VVWRA RFP Attachment A Effluent Limit	Title 22 Water Recycling Criteria	Draft Regulation for Groundwater Recharge Reuse	Recommended Effluent Design Criteria
TSS (mg/L)		--	--	
Avg. Monthly	10			10
Avg. Weekly	15			15
Max. Daily	30			30
Total N (mg/L)	--	--	5	8 / 4 (1)
Turbidity (NTU)	--		--	
24-hr 5% of time sample max.		0.2		0.2
Any time max.		0.5		0.5
Total Coliform (CFU/100 mL)	--		--	
7-day median max.		2.2		2.2
30-day one sample max.		23		23
Single sample max. any time		240		240

Note:
(1) Biological process will be designed to treat to a goal of 8 mg/L, with the flexibility to meet future use end use limits goal of 4 mg/L (80 percent of maximum limits of 10 and 5 mg/L, respectively).

SUMMARY AND RECOMMENDATIONS

It is recommended that influent wastewater quality values based on historical data at the Apple Valley Metering Station be used to design the facilities of the Apple Valley WRP. Once the WRP is constructed and operating, it is recommended that regular influent sampling be conducted to verify the design values, and establish values for future expansions.

The recommended effluent quality goals comply with applicable regulations for water reuse in California. We recommend designing the biological treatment system to initially comply with a maximum Total Nitrogen (TN) limit of 10 mg/L, with provisions to meet a TN limit of 5 mg/L with minimal process modifications. Using a recommended 20 percent safety factor, the biological process will be designed to 80 percent of the maximum limits, resulting in a near-term effluent design criteria of 8 mg/L, with provisions to meet 4 mg/L in the future with minimal process modifications.

APPENDIX 1B

Wastewater Characteristics from VVWRA Metering Station

APPLE VALLEY

Victor Valley Water Reclamation Authority
Hesperia and Apple Valley Scalping WRPs
Project No: 8229A.00

Apple Valley

Wastewater Characteristics from VVWRA Metering Station
All samples are 24 hr. composite samples unless noted otherwise.

Parameter Date	pH	NH3-N mg/L	BOD mg/L	TSS mg/L	TDS mg/L	COD mg/L	Conductivity µS/cm	Zinc µg/L	COD/BOD
07/26/05	7.77		243	330	657	633			2.60
08/10/05	7.52	41.8	230	317	531	612			2.66
09/20/05	7.43	37.7	174	257	488	539			3.10
10/04/05	7.16	49	262	252	473	577			2.20
11/01/05	7.41	50.8	220	295	521	588			2.67
12/13/05	7.32	59	247	184	400	556			2.25
01/10/06	7.54	50.8	368	380	527	755			2.05
02/07/06	7.54	54.3	361	322	390	688			1.91
04/11/06	7.26	59.9	352	287	542	685			1.95
05/09/06	7.22	52.5	293	257	572	699			2.39
06/13/06	7.41	45	195	246	498	536			2.75
07/11/06	7.24	49.1	216	207	337	512			2.37
08/08/06	7.51	45.3	234	236	444	568			2.43
09/12/06	7.28	45.8	275	286	666	701			2.55
10/10/06	7.3	18.4	271	194	597	505			1.86
11/07/06	7.23	22	270	108	476	508			1.88
12/12/06	7.55	27.4	318	255	509	734			2.31
01/09/07	7.44	24	296	266	472	644			2.18
02/06/07	7.49	22.8	306	204	537	627			2.05
03/13/07	7.43	23.1	298	324	442	687			2.31
04/10/07	7.51	25.4	275	214	478	570			2.07
05/07/07	7.57	26.7	306	250	518	640			2.09
06/18/07	7.6	24.5	284	230	566	626			2.20
07/16/07	7.62	21	235	158	676	491			2.09
08/13/07	7.59	23.2	288	248	538	612			2.13
09/17/07	7.56	29.1	235	236	502	592			2.52
10/22/07	7.69	28.2	228	188	516	480			2.11
11/12/07	7.47	28.9	250	214	720	618			2.47
12/10/07	7.39	28.8	320	490	660	970			3.03
01/14/08	7.64	26.7	174	240	668	508	1053		2.92
02/11/08	7.52	25.9	216	246	700	584	970		2.70
03/10/08	7.47	29.8	208	196	676	584	965		2.81
04/07/08	7.41	27.4	276	230	518	608	992		2.20
05/05/08	7.4	26.3	255	228	388	602	814		2.36
06/09/08	7.41	24.6	313	324	478	700	865		2.24
07/14/08	7.44	28.1	258	252	498	654	815		2.53
08/11/08	7.52	30.3	324	304	446	685	808		2.11
09/08/08	7.69	27	436	328	374	700	796		1.61
10/13/08	7.62	31.9	214	262	414	589	805		2.75
11/17/08	7.55	32.1	158	264	418	407	820		2.58
12/08/08	7.36	33.2	422	566	460	1037	851		2.46
01/05/09	7.44	32	298	256	412	656	916		2.20
02/02/09	7.55	32.1	426	488	456	1210	882		2.84
03/09/09	7.44	30.9	285	288	476	684	834		2.40
04/13/09	7.38	30.9	524	602	458	1078	805		2.06
05/05/09	7.43	32.6	223	154	296	564	824	120	2.53
06/01/09	7.48	30.1	218	196	432	538	820		2.47
07/13/09	7.47	24.1	200	214	548	483	964		2.42
08/10/09	7.54	28.5	254	330	524	598	986		2.35

Victor Valley Water Reclamation Authority
Hesperia and Apple Valley Scalping WRPs
Project No: 8229A.00

Apple Valley

Wastewater Characteristics from VVWRA Metering Station
All samples are 24 hr. composite samples unless noted otherwise.

Parameter **Date**	**pH**	**NH3-N** **mg/L**	**BOD** **mg/L**	**TSS** **mg/L**	**TDS** **mg/L**	**COD** **mg/L**	**Conductivity** **µS/cm**	**Zinc** **µg/L**	**COD/BOD**
2005-2009 Analysis									
Count	49	48	49	49	49	49	20	1	49
Average	7.47	**33.3**	**276**	**274**	508	**641**	879	120	2.36
Median	7.47	29.5	270	252	498	612	843	120	2.36
Std dev	0.13	10.8	72	96	96	152	80.45		0.32
Percentile	0.85	0.85	0.85	0.85	0.85	0.85	0.85		0.85
	7.59	48.8	323	327	645	700	972.40		2.70
PF (for reference)		1.66	1.20	1.30	1.30	1.14	1.15		
Yearly Averages									
2005	7.44	47.7	229	273	512	584			2.58
2006	7.37	42.8	287	253	505	626			2.22
2007	7.53	25.5	277	252	552	630			2.27
2008	7.50	28.6	271	287	503	638	880		2.44
2009	7.47	30.2	304	316	450	726	879	120	2.41
Sep-07toAug-09		**29.1**							

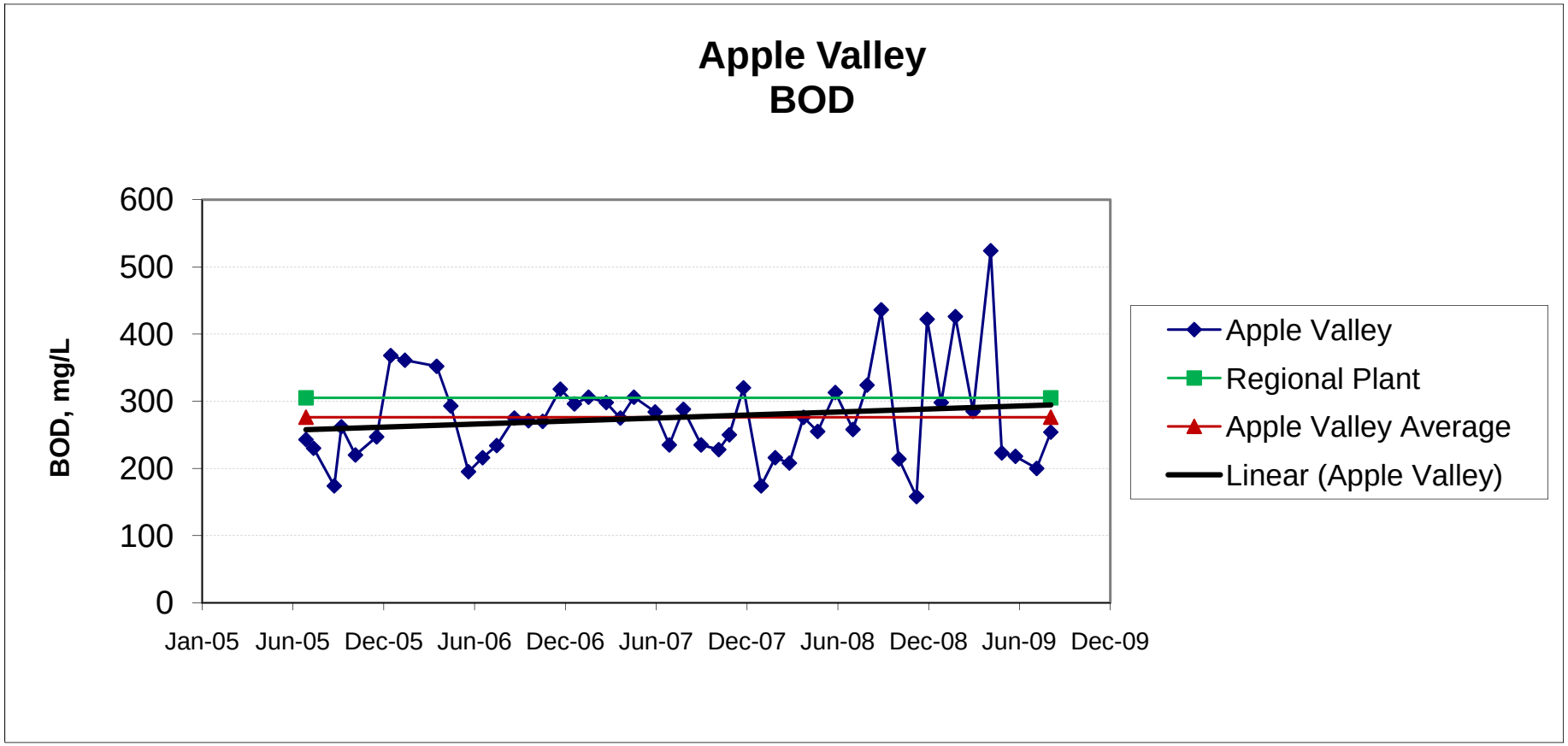
Apple Valley
BOD
BOD, mg/L
600
500
400
300
200
100
0
Jan-05
Jun-05
Dec-05
Jun-06
Dec-06
Jun-07
Dec-07
Jun-08
Dec-08
Jun-09
Dec-09
Apple Valley
Regional Plant
Apple Valley Average
Linear (Apple Valley)

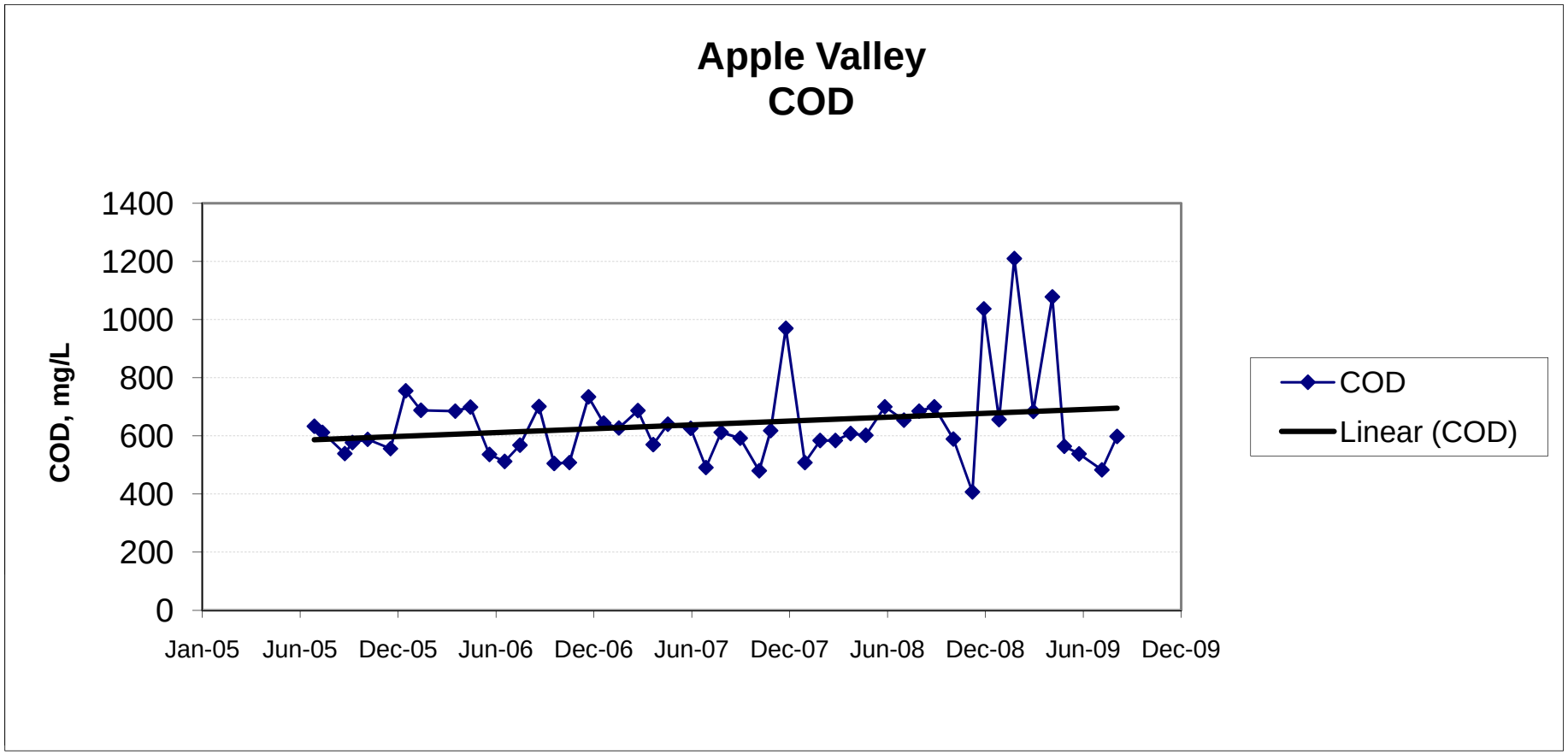
Apple Valley
COD
COD, mg/L
1400
1200
1000
800
600
400
200
0
Jan-05
Jun-05
Dec-05
Jun-06
Dec-06
Jun-07
Dec-07
Jun-08
Dec-08
Jun-09
Dec-09
COD
Linear (COD)

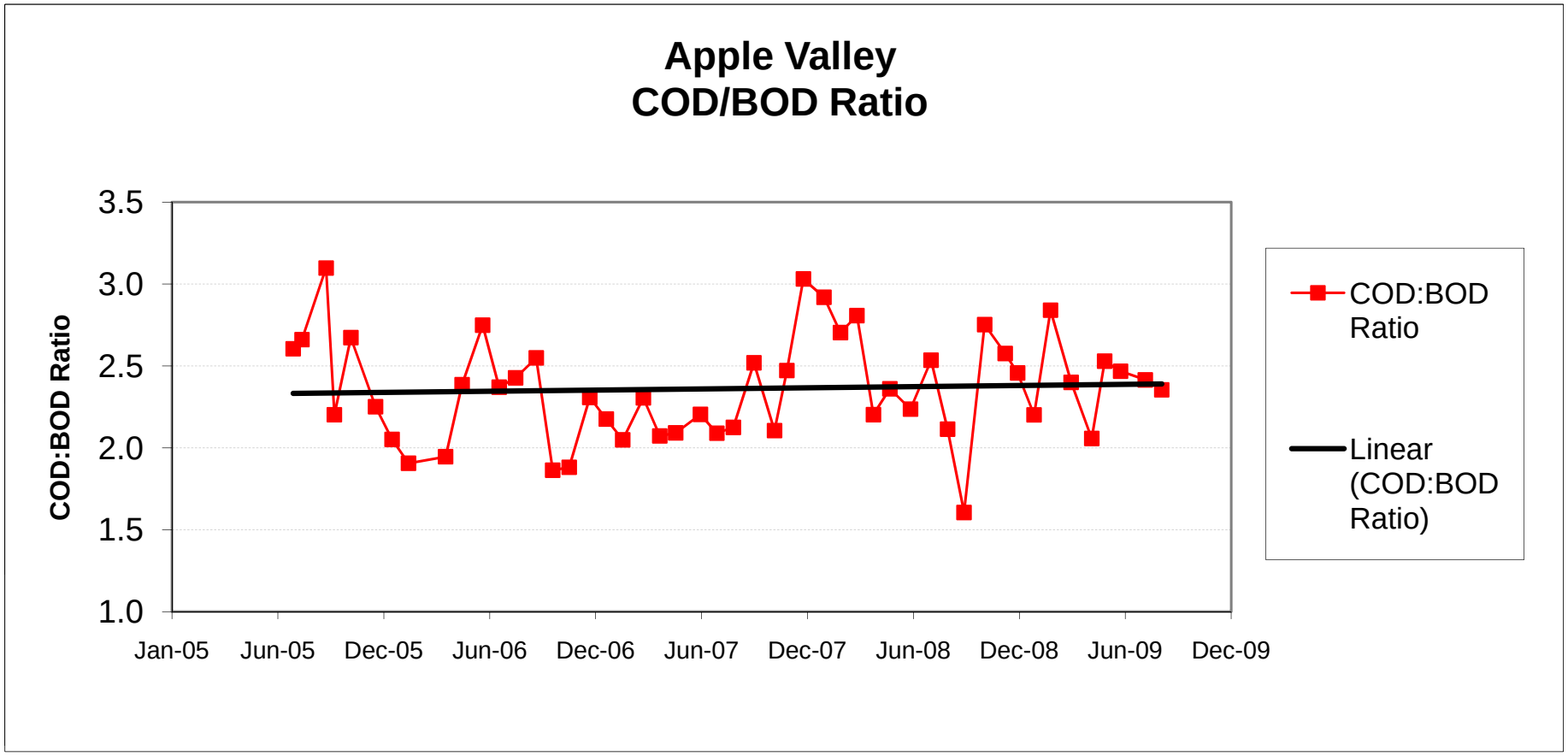
Apple Valley
COD/BOD Ratio
COD:BOD Ratio
3.5
3.0
2.5
2.0
1.5
1.0
Jan-05
Jun-05
Dec-05
Jun-06
Dec-06
Jun-07
Dec-07
Jun-08
Dec-08
Jun-09
Dec-09
COD:BOD Ratio
Linear (COD:BOD Ratio)

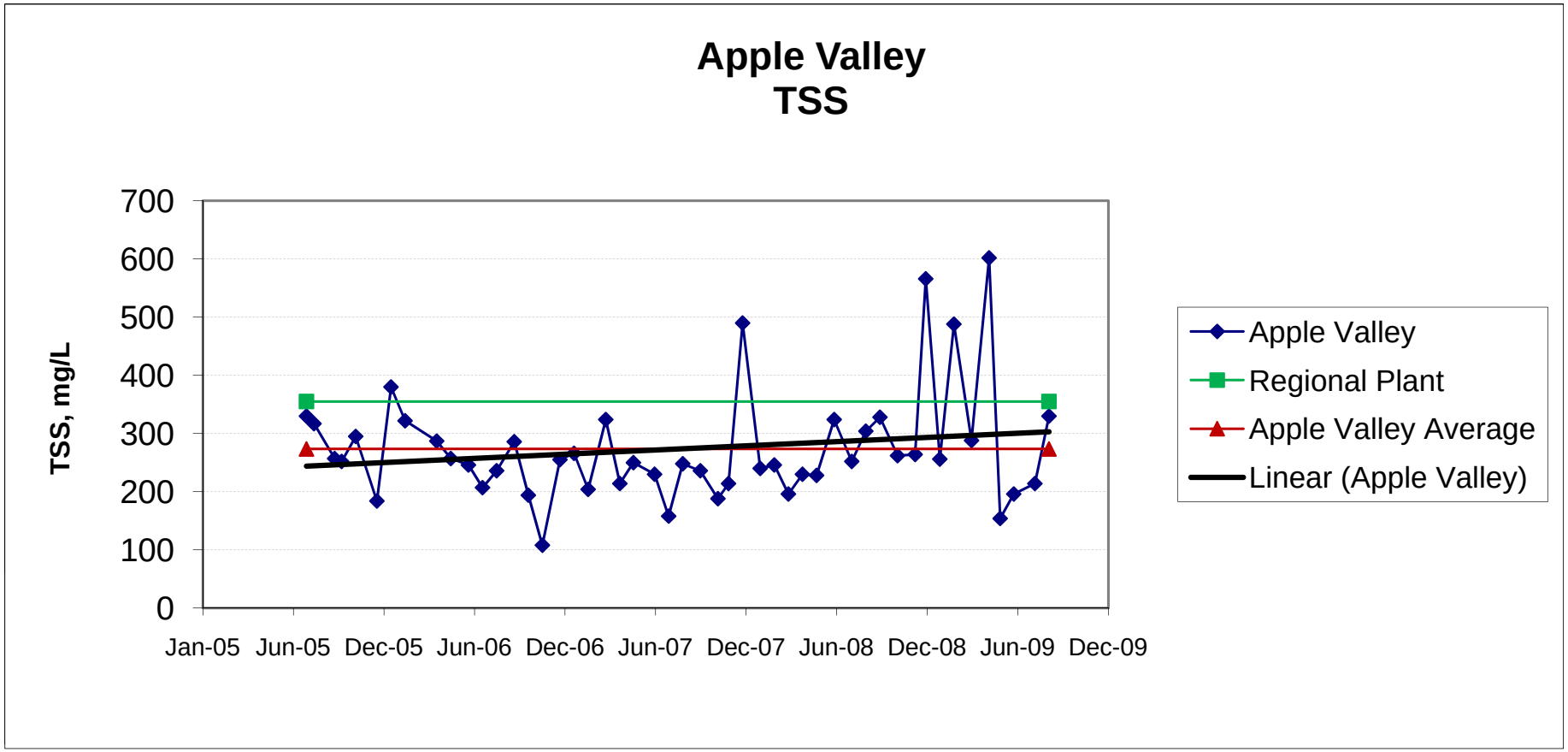
Apple Valley
TSS
TSS, mg/L
700
600
500
400
300
200
100
0
Jan-05
Jun-05
Dec-05
Jun-06
Dec-06
Jun-07
Dec-07
Jun-08
Dec-08
Jun-09
Dec-09
Apple Valley
Regional Plant
Apple Valley Average
Linear (Apple Valley)

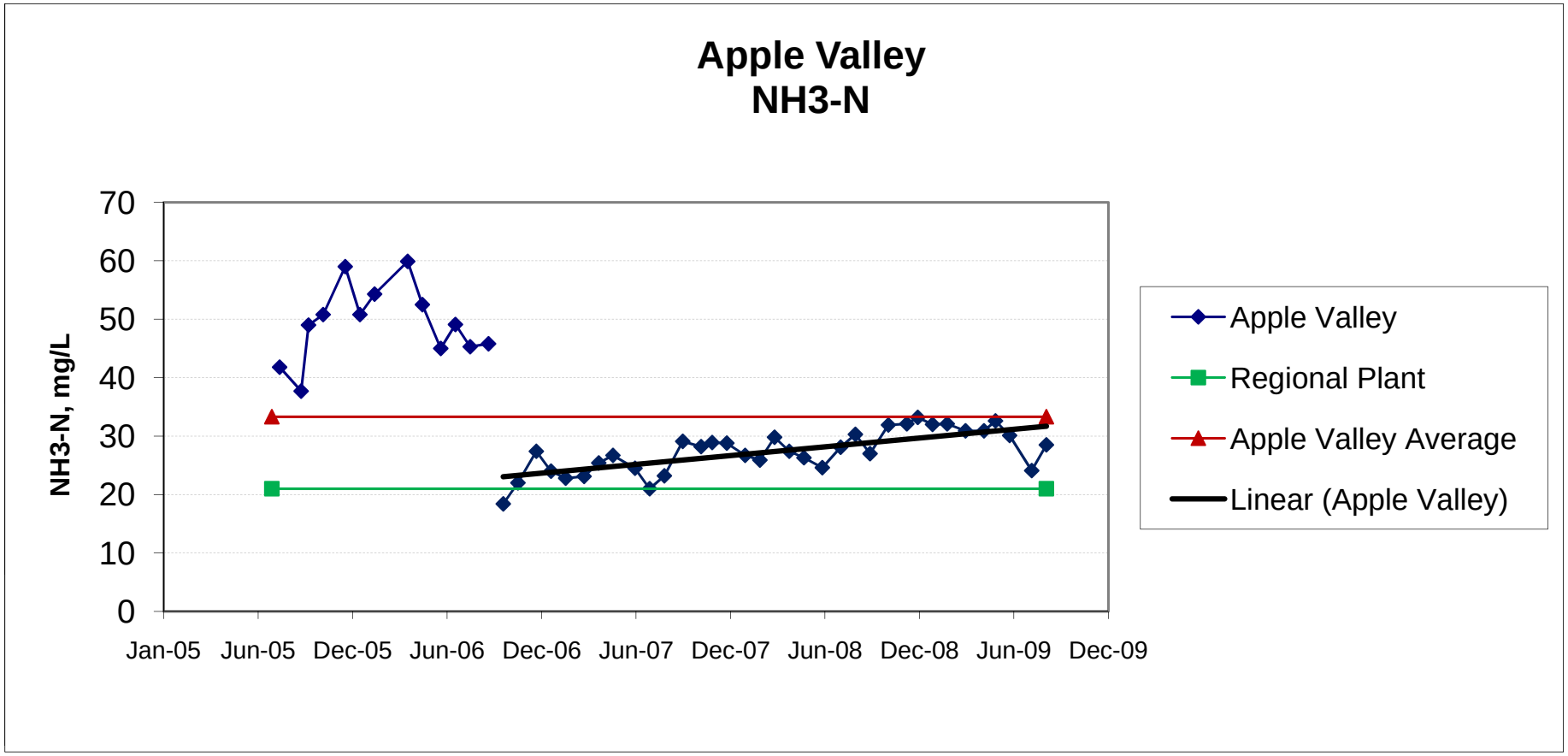
Apple Valley
NH3-N
NH3-N, mg/L
70
60
50
40
30
20
10
0
Jan-05
Jun-05
Dec-05
Jun-06
Dec-06
Jun-07
Dec-07
Jun-08
Dec-08
Jun-09
Dec-09
Apple Valley
Regional Plant
Apple Valley Average
Linear (Apple Valley)

DESIGN INFORMATION MEMORANDUM NO. 2B

PLANT HYDRAULICS

Project Name:	Hesperia and Apple Valley Scalping WRPs, Raw Sewage Lift Station and Force Mains		
Client:	Victor Valley Wastewater Reclamation Authority	**Date:**	December 2009

INTRODUCTION

The Design Information Memorandum (DIM) No. 2B defines the background information and assumptions made for the development of hydraulic profile of the Apple Valley Water Reclamation Plant (WRP). The purpose of DIM-2B is to present the preliminary hydraulic profile developed for the Apple Valley WRP.

HYDRAULIC PROFILE

A preliminary hydraulic profile was developed for the Apple Valley WRP and is shown in Figure 2B.1. Since the WRP is designed as a scalping plant with design capacity of 1.0 mgd in Phase 1 expandable to 2.0 mgd in Phase 2 and 4.0 mgd in Phase 3, the hydraulic profile presents water surface elevations for all phases. The key components of the basis for developing the Apple Valley WRP hydraulic profile include the following:

- The ground elevation at the Apple Valley WRP site is at approximately 2,909 feet above mean sea level. Assume the finished grade of the proposed plant is at 2,909 feet.
- The influent sewer enters the existing Otoe Road Lift Station wet well at a depth of approximately 19 feet below grade. The influent pumps will lift raw sewage to a water surface elevation of approximately 7 feet above finished grade of the proposed Headworks Building. Raw water will flow by gravity through the fine screening units.
- The existing Otoe Road Lift Station will be modified to pump raw wastewater to the WRP and to pump flows in excess of the WRP capacity to the downstream collection system. The modifications to the Lift Station will be determined upon receipt and analysis of the existing flow history at the Lift Station.
- From headworks, the screened influent will flow by gravity through the biological treatment process to the membrane bioreactor (MBR) feed pumps wet well. The mixed liquor will be pumped via MBR feed-forward pumps to the membrane basins. From the MBR basins, permeate will be pumped through the closed-vessel UV disinfection system to the reclaimed water pump station. The return activated sludge (RAS) will flow by gravity back to the biological treatment basins.
- Disinfected reclaimed water will be pumped by the reclaimed water pumps to both an off-site reuse system and on-site plant water system.
- Hydraulic profile was developed under the condition of all trains (biological basins and MBR) in service for Phase 1 (1.0 mgd) and Phase 2 (2.0 mgd). The hydraulic profile also shows water surface elevation under the condition of one train out-of-service (biological basins and MBR) for Phase 1.

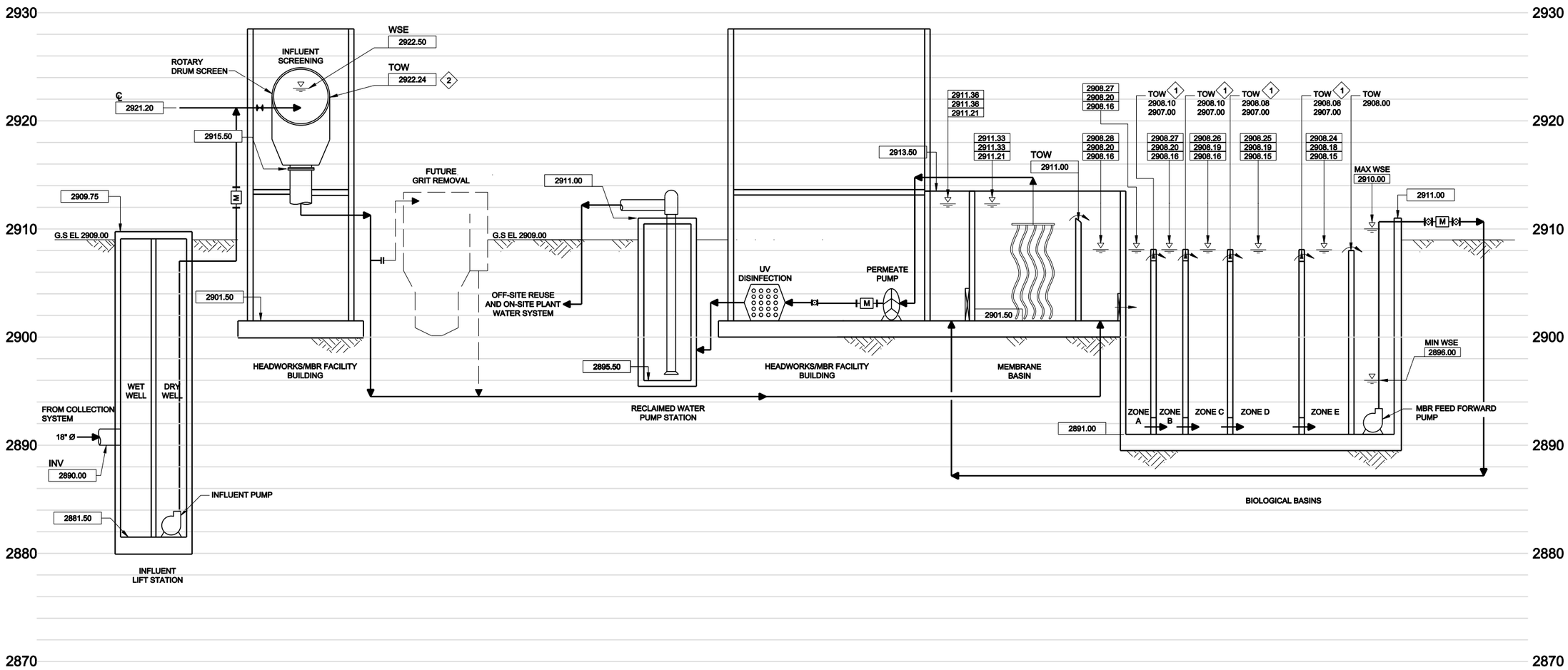

HYDRAULIC PROFILE

HORIZONTAL SCALE: NOT TO SCALE
VERTICAL SCALE: 1" = 5'

GENERAL NOTES:

1. FINISHED GROUND SURFACE GRADE AT 2909.00 FEET AMSL.
2. RAS RECYCLE FLOW IS 4 TIMES INFLUENT Q

KEY NOTES:

1. ELEVATIONS FOR:
   TOP OF BAFFLE WALL AT HIGH SECTION
   TOP OF BAFFLE WALL AT LOW SECTION
2. TOP OF WEIR FOR DRUM SCREEN INFLUENT

LEGEND

W.S. ELEVATION

XX.XX — WATER SURFACE ELEVATION AT PHASE 1 FLOW OF 1MGD, ONE TRAIN OUT OF SERVICE
XX.XX — WATER SURFACE ELEVATION AT PHASE 2 FLOW OF 2MGD, ALL TRAINS IN SERVICE
XX.XX — WATER SURFACE ELEVATION AT PHASE 1 FLOW OF 1MGD, ALL TRAINS IN SERVICE

VICTOR VALLEY WASTEWATER RECLAMATION AUTHORITY
APPLE VALLEY WRP - PRELIMINARY DESIGN REPORT

HDR

carollo

HYDRAULIC PROFILE

FIG 2B.1

APPLE VALLEY WATER RECLAMATION PLANT

DESIGN INFORMATION MEMORANDUM NO. 3B

PROCESS MODELING

Project Name:	Hesperia and Apple Valley Scalping WRPs, Raw Sewage Lift Station and Force Mains		
Client:	Victor Valley Wastewater Reclamation Authority	**Date:**	December 2009

INTRODUCTION

The Design Information Memorandum No. 1B (DIM No. 1B) defined the design influent flows and loadings and effluent quality criteria for the Apple Valley Water Reclamation Plant (WRP), as well as the extent of future plant expansions at the Apple Valley WRP site. The purpose of this DIM No. 3B is to present the results of the computerized process model simulations used to design the secondary treatment system for the Apple Valley WRP.

PROCESS DESIGN

Figure 3B.1 presents the proposed process flow schematic for the Apple Valley WRP. The liquid stream process consists of influent pumping, fine screening, potential future grit removal, activated sludge process, filtration via a membrane bioreactor (MBR) system, ultraviolet (UV) disinfection, and reclaimed water storage and pumping. Waste activated sludge will be pumped to the collection system for treatment at the Westside Water Reclamation Plant (WRP). Detailed descriptions and design criteria for each unit process are included in other DIM as part of this project. The process design for the activated sludge and MBR system is presented herein.

The main objective of the biological treatment system is to reduce the concentrations of biochemical oxygen demand (BOD), total suspended solids (TSS), and total nitrogen (TN) in the raw wastewater. To achieve such reductions, the Apple Valley WRP will utilize a suspended growth, activated sludge system followed by a membrane bioreactor (MBR) to achieve solids-liquid separation.

The activated sludge system is designed to perform nitrification and denitrification in order to achieve effluent TN concentrations below the target limits presented in DIM No. 1B. An initial TN target limit of 8 mg/L (maximum limit of 10 mg/L) was assumed for the design of the secondary treatment system. However, the activated sludge basins were designed with provisions to meet a future TN target limit of 4 mg/L (maximum limit of 5 mg/L) with relatively minor process adjustments.

Process Design for a TN Limit of 10 mg/L

The proposed process to meet a target TN limit of 8 mg/L is a four-stage Bardenpho process without an internal mixed liquor recycle, coupled with MBR. The four-stage Bardenpho process combines anoxic and aerobic zones in a common basin structure (biological treatment basins). Baffle walls are provided to help with zone separation, in order to minimize short-circuiting and back-mixing. The four-stage Bardenpho process also includes a nitrate return, typically via an internal mixed liquor recycle from the end of the first aeration zone back to the start of the

anoxic zone. In a Bardenpho process coupled with MBR, the return activated sludge (RAS) from the MBR basins also functions as a nitrate return due to the high RAS flow rates required for the operation of the MBR system. Biological treatment in the proposed process includes the following steps:

- Screened wastewater first enters the anoxic zone, where it is mixed with the RAS stream coming from the MBR basins. The combination of wastewater and RAS under anoxic conditions (nitrate, but no dissolved oxygen) promotes denitrification, where microorganisms in the mixed liquor will use nitrate (instead of oxygen) to metabolize the organic material in the wastewater, thereby converting nitrates to nitrogen gas, which is released to the atmosphere.
- In the aerobic zone, influent ammonia is converted to nitrate by nitrifying microorganisms. Carbon oxidation of the waste stream also occurs under aerobic conditions.
- The post-anoxic zone provides additional denitrification using endogenous carbon source (cell material) and nitrates generated in the preceding aerobic zones.
- Conversions under aerobic conditions continue in the MBR basins, as aeration is supplied in these basins to control membrane fouling. Membranes provide solids-liquid separation of the mixed liquor, combining clarification and filtration in one treatment step. The RAS return flow from the MBR basins back to the head of the biological treatment process controls the concentration of microorganisms in the activated sludge system, as well as the amount of nitrates returned for denitrification.

The availability of adequate, readily biodegradable carbon is crucial to the denitrification process. Based on the influent wastewater characteristics identified in DIM No. 1B, the average and maximum month BOD:TKN ratios of 6.4:1 and 7.4:1 are considered within an acceptable range of BOD:TKN ratios suitable for a typical MLE process configuration without the need for supplemental carbon addition.

Process Design for a TN Limit of 5 mg/L

The proposed process to meet a target TN limit of 4 mg/L is a four-stage Bardenpho process, including a second internal mixed liquor recycle loop. This configuration is achieved by modifying the proposed Bardenpho process, retrofitting an internal mixed liquor recycle stream in the basins proposed to comply with a TN limit of 10 mg/L. The internal mixed liquor recycle is achieved by the addition of pumps to return mixed liquor from the end of the last aerated zone back to the start of the first anoxic zone. Biological treatment in a four-stage Bardenpho process includes the following steps:

- The first anoxic zone receives screened wastewater, RAS from the MBR basins, and nitrified mixed liquor recycled from the end of the aerated zones in the biological process treatment basins. The nitrates returned in the mixed liquor recycle and RAS are denitrified under anoxic conditions. Influent organic matter provides the carbon and energy source for denitrification (conversion of nitrate to nitrogen gas).
- The aerobic zones in the biological process treatment basins provide aerated treatment to achieve nitrification (conversion of ammonia to nitrate) and further reduction of BOD. The internal mixed liquor recycle from the last aeration zone to the first anoxic zone provides additional nitrates to drive the denitrification process.
- The post-anoxic zone provides additional denitrification using endogenous carbon source (cell material) and nitrates generated in the preceding aerobic zones.

- The MBR basins provide the last aerobic stage of the Bardenpho process. Intermittent aeration is provided for air scouring the membranes, which creates an aerobic environment. Membranes provide solids-liquid separation of the mixed liquor, combining clarification and filtration in one treatment step. The RAS return flow from the MBR basins back to the head of the biological treatment process controls the concentration of microorganisms in the activated sludge system, as well as a significant portion of the nitrates returned for denitrification in the first anoxic zone.

The integration of a post-anoxic zone between the primary aerobic zones and the aerated MBR basins, coupled with a mixed liquor recycle, is an effective yet cost-effective process strategy to reliably achieve low TN limits.

PROCESS MODELING

Sizing of the biological treatment basins was optimized through the use of process modeling tools including Biotran and BioWin. Biotran is a computer model developed by Carollo for wastewater treatment plant process evaluations. BioWin is a commercially available process modeling software program for the analysis and evaluation of wastewater treatment processes. These programs utilize mass balances, and biological and physical models, to simulate the interactions between the different processes in a wastewater treatment facility. The model is used in conjunction with the wastewater characteristics and design criteria to establish treatment capacities for the different processes, and predict the characteristics of the treated effluent. The models also generate projections for biosolids production, oxygen usage, etc., that can be used to size auxiliary facilities (i.e., blowers, pumps, etc.).

Modeling Scenarios

The biological treatment basins are sized for mass loadings of the different wastewater constituents (BOD, TSS, TKN, etc.) in the plant influent. While the capacity of biological treatment basins is commonly referred to in terms of hydraulic flow (million gallons per day), the capacity is really determined by the constituent loadings (pounds per day). Therefore, the two design conditions considered in sizing the biological treatment basins are the annual average day (AADF) loadings, and the maximum month average day (MMADF) loadings.

The biological process basins were sized to meet the following criteria, based on standard practice for biological treatment basins redundancy:

- Basins sized to treat the design flow at annual average day constituent loadings with one basin out-of-service.
- Basins sized to treat the design flow at maximum month average day constituent loadings with all basins in service.
- Basins sized to achieve an initial target TN concentration of 8 mg/L, and a future target TN concentration of 4 mg/L under both AADF and MMADF loadings. The initial TN permitted limit is anticipated to be 10 mg/L, with the possibility of a future TN limit of 5 mg/L.
- Basins sized for a modular expansion between Phase 1 and Phase 2.

Process Modeling Results

Sizing of the biological process basins is driven by the wastewater loadings at maximum month average day loading conditions. The basin design incorporates sufficient swing zones to provide

flexibility to adapt to future changes in influent wastewater characteristics and future regulations requiring lower effluent TN concentrations.

In order to achieve the anticipated future TN limit of 5 mg/L, a second internal mixed liquor recycle (IMLR) loop is required. In order to provide adequate flexibility for the potential future lower TN limit without excessive capital expenditures under Phase 1, the basins will be designed such that the second set of IMLR pumps can be efficiently added in the future.Figure 3B.2 presents the BioWin schematic of the process configuration to meet a TN limit of 10 mg/L. Table 3B.1 presents a summary of the process model simulation results for the secondary treatment process, operated to meet a TN limit of 10 mg/L. Two biological process basins are proposed for Phase 1, with a third basin added in Phase 2, each basin with a total volume of 0.381 million gallons (MG) without counting the volume in the MBR feed forward pump wet well. Two MBR basins are considered in Phase 1, with addition of membrane cassettes under Phase 2. A more detailed description of the basins is included in DIM No. 6B.

Figure 3B.2 BioWin Process Model Flow Schematic for TN Limit of 10 mg/L

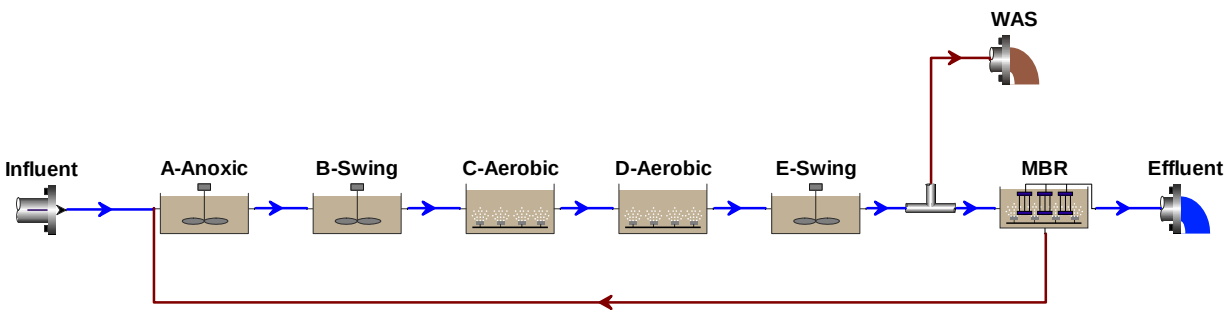

Table 3B.1 Biological Treatment System Design Criteria for TN Limit of 10 mg/L
Apple Valley WRP Design Information Memoranda
Victor Valley Wastewater Reclamation Authority, California

Parameter	Unit	Phase 1 (1.0 mgd)	Phase 2 (2.0 mgd)
AERATION BASINS			
Type of Basins	-	Single Pass, multiple zones	
Number of Parallel Trains	-	2	3
Basin Side Water Depth	ft	17	
Basin Width [(1)], each	ft	20	
Zone Lengths – (Operation) [(1)]			
Zone A – Anoxic	ft	10 (Anoxic)	
Zone B – Swing	ft	10 (Anoxic)	
Zone C – Aerobic	ft	55 (Aerobic)	
Zone D – Aerobic	ft	55 (Aerobic)	
Zone E – Swing	ft	20 (Anoxic)	
Total Basin Length	ft	150	

Table 3B.1 Biological Treatment System Design Criteria for TN Limit of 10 mg/L
Apple Valley WRP Design Information Memoranda
Victor Valley Wastewater Reclamation Authority, California

Parameter	Unit	Phase 1 (1.0 mgd)	Phase 2 (2.0 mgd)
Basin Volume, each	MG	0.381	
Total Basin Volume	MG	0.763	1.144
Anoxic Fraction of Total Volume	-	0.27	
Aerobic Fraction of Total Volume	-	0.73	
MLSS Concentration in Biological Basins	mg/L	8,000	
MLSS Concentration in MBR Basins	mg/L	10,000	
Feed Forward Flow	mgd	5.0	10.0
RAS Return Flow	mgd	4.0	8.0
Internal Mixed Liquor Return Flow	mgd	-	-
Total Solids Retention Time			
MMADF, all basins in service	days	19.8	13.4
AADF, all basins in service	days	33.5	22.9
AADF, one basin out-of-service	days	16.0	14.7
Aerobic Solids Retention Time			
MMADF, all basins in service	days	14.9	10.0
AADF, all basins in service	days	25.1	17.0
AADF, one basin out-of-service	days	12.3	11.0
EFFLUENT NITROGEN			
Effluent Nitrogen, MMADF all basins in service			
Ammonia Nitrogen (NH_4-N)	mg/L	0.28	0.46
Nitrate-Nitrogen (NO_3-N)	mg/L	4.99	4.55
Nitrite Nitrogen (NO_2-N)	mg/L	0.07	0.12
Organic Nitrogen	mg/L	2.47	2.39
Total Nitrogen (TN)	**mg/L**	**7.81**	**7.52**
Effluent Nitrogen, AADF all basins in service			
Ammonia Nitrogen (NH_4-N)	mg/L	0.24	0.36
Nitrate-Nitrogen (NO_3-N)	mg/L	4.48	4.24
Nitrite Nitrogen (NO_2-N)	mg/L	0.06	0.09
Organic Nitrogen	mg/L	2.07	2.03
Total Nitrogen (TN)	**mg/L**	**6.85**	**6.72**

Table 3B.1 Biological Treatment System Design Criteria for TN Limit of 10 mg/L
Apple Valley WRP Design Information Memoranda
Victor Valley Wastewater Reclamation Authority, California

Parameter	Unit	Phase 1 (1.0 mgd)	Phase 2 (2.0 mgd)
Effluent Nitrogen, AADF one basin o.o.s.			
Ammonia Nitrogen (NH_4-N)	mg/L	0.20	0.35
Nitrate-Nitrogen (NO_3-N)	mg/L	4.26	4.04
Nitrite Nitrogen (NO_2-N)	mg/L	0.05	0.09
Organic Nitrogen	mg/L	2.14	2.08
Total Nitrogen (TN)	**mg/L**	**6.66**	**6.56**
AERATION			
Oxygen Demand (2)	ppd	4,300	8,500
Estimated Blower Air Requirement (3)	scfm	1,800	3,700
WASTE ACTIVATED SLUDGE			
Daily Solids at Max. Month Loading	ppd	2,800	6,000
Daily Solids at Avg. Day Loading	ppd	1,600	3,500

Notes:
(1) Inside dimensions.
(2) At maximum month average day loadings.
(3) Includes peak day peaking factor of 1.3 over MMADF.

Figure 3B.3 presents the BioWin schematic of the process configuration to meet a TN limit of 5 mg/L. Table 3B.2 presents a summary of the process model simulation results for the secondary treatment process, operated to meet a TN limit of 5 mg/L. The difference with respect to the process configuration for a TN limit of 10 mg/L is the addition of a second internal mixed liquor recycle loop to enhance the denitrification process.

Figure 3B.3 BioWin Process Model Flow Schematic for TN Limit of 5 mg/L

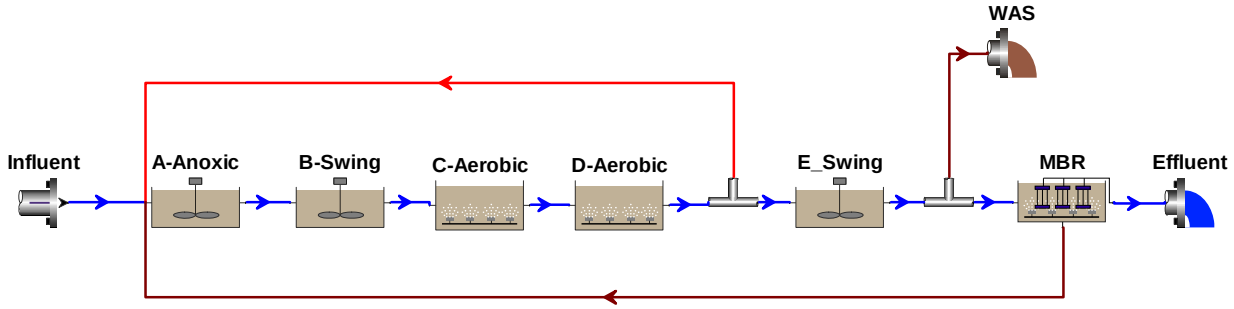

Table 3B.2 Biological Treatment System Design Criteria for TN Limit of 5 mg/L
Apple Valley WRP Design Information Memoranda
Victor Valley Wastewater Reclamation Authority, California

Parameter	Unit	Phase 1 (1.0 mgd)	Phase 2 (2.0 mgd)
AERATION BASINS			
Type of Basins	-	Single Pass, multiple zones	
Number of Parallel Trains	-	2	3
Basin Side Water Depth	ft	17	
Basin Width [(1)], each	ft	20	
Zone Lengths – (Operation) [(1)]			
Zone A – Anoxic	ft	10 (Anoxic)	
Zone B – Swing	ft	10 (Anoxic)	
Zone C – Aerobic	ft	55 (Aerobic)	
Zone D – Aerobic	ft	55 (Aerobic)	
Zone E – Swing	ft	20 (Anoxic)	
Total Basin Length	ft	150	
Basin Volume, each	MG	0.381	
Total Basin Volume	MG	0.763	1.144
Anoxic Fraction of Total Volume	-	0.27	
Aerobic Fraction of Total Volume	-	0.73	
MLSS Concentration in Biological Basins	mg/L	8,000	
MLSS Concentration in MBR Basins	mg/L	10,000	
Feed Forward Flow	mgd	5.0	10.0
RAS Return Flow	mgd	4.0	8.0
Internal Mixed Liquor Return Flow	mgd	4.0	8.0
Total Solids Retention Time			
MMADF, all basins in service	days	20.9	14.3
AADF, all basins in service	days	33.5	23.2
AADF, one basin out-of-service	days	16.0	14.6
Aerobic Solids Retention Time			
MMADF, all basins in service	days	15.6	10.6
AADF, all basins in service	days	25.1	17.2
AADF, one basin out-of-service	days	12.3	10.8
EFFLUENT NITROGEN			
Effluent Nitrogen, MMADF all basins in service			
Ammonia Nitrogen (NH_4-N)	mg/L	0.31	0.52
Nitrate-Nitrogen (NO_3-N)	mg/L	2.10	1.79

Table 3B.2 Biological Treatment System Design Criteria for TN Limit of 5 mg/L
Apple Valley WRP Design Information Memoranda
Victor Valley Wastewater Reclamation Authority, California

Parameter	Unit	Phase 1 (1.0 mgd)	Phase 2 (2.0 mgd)
Nitrite Nitrogen (NO_2-N)	mg/L	0.07	0.11
Organic Nitrogen	mg/L	2.38	2.31
Total Nitrogen (TN)	**mg/L**	**4.86**	**4.73**
Effluent Nitrogen, AADF all basins in service			
Ammonia Nitrogen (NH_4-N)	mg/L	0.25	0.38
Nitrate-Nitrogen (NO_3-N)	mg/L	2.38	2.09
Nitrite Nitrogen (NO_2-N)	mg/L	0.06	0.09
Organic Nitrogen	mg/L	2.06	2.02
Total Nitrogen (TN)	**mg/L**	**4.75**	**4.58**
Effluent Nitrogen, AADF one basin o.o.s.			
Ammonia Nitrogen (NH_4-N)	mg/L	0.21	0.38
Nitrate-Nitrogen (NO_3-N)	mg/L	3.00	2.15
Nitrite Nitrogen (NO_2-N)	mg/L	0.05	0.09
Organic Nitrogen	mg/L	2.14	2.07
Total Nitrogen (TN)	**mg/L**	**5.41** (2)	**4.70**
AERATION			
Oxygen Demand (3)	ppd	4,500	8,900
Estimated Blower Air Requirement (4)	scfm	1,800	3,800
WASTE ACTIVATED SLUDGE			
Daily Solids at Max. Month Loading	ppd	2,600	5,600
Daily Solids at Avg. Day Loading	ppd	1,600	3,400

Notes:

(1) Inside dimensions.

(2) Limiting factor to achieve < 5 mg/L TN is carbon (not anoxic volume or recycle capacity). Supplemental carbon addition may be required.

(3) At maximum month average day loadings.

(4) Includes peak day peaking factor of 1.3 over MMADF.

SUMMARY AND RECOMMENDATIONS

The recommended redundancy for the aeration basins should allow the plant to reliably meet the effluent quality goals with one biological treatment basin out-of-service when treating annual average day loadings, and meet the same goals when treating maximum month average day loadings with all basins in service.

The recommended MLE process design for the biological treatment process can achieve compliance with a maximum TN limit of 10 mg/L. The recommended basin design allows the inclusion of the necessary provisions to readily accommodate a post-anoxic zone and internal mixed liquor return pumping, in order to achieve compliance with a potential future TN limit of 5 mg/L.

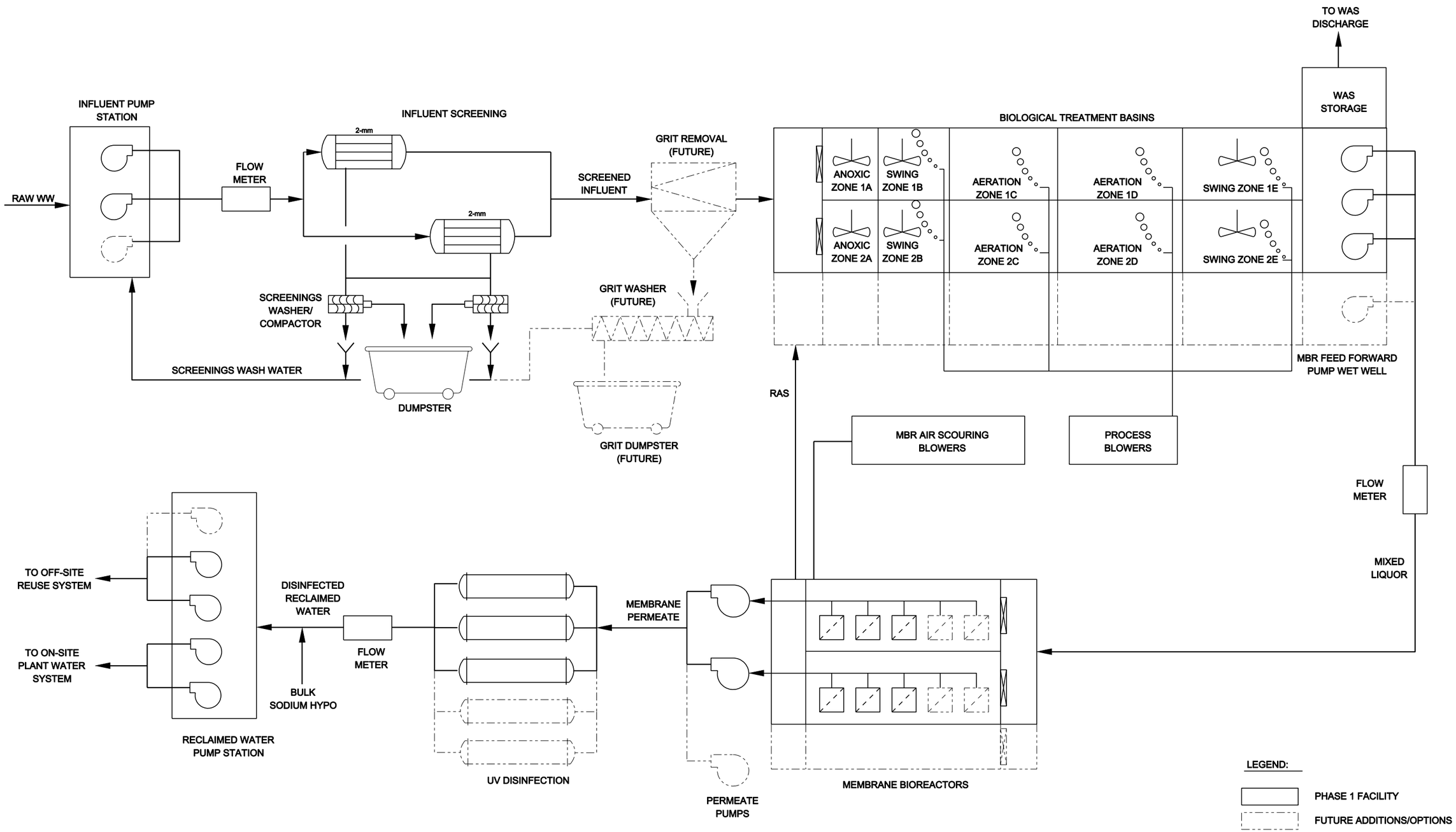

VICTOR VALLEY WASTEWATER RECLAMATION AUTHORITY
APPLE VALLEY WRP - PRELIMINARY DESIGN REPORT

HDR

carollo

PROCESS FLOW DIAGRAM

FIG 3B.1

APPLE VALLEY WATER RECLAMATION PLANT

DESIGN INFORMATION MEMORANDUM NO. 4B
PERMITTING AND EFFLUENT DISPOSAL

Project Name:	Hesperia and Apple Valley Scalping WRPs, Raw Sewage Pump Station and Force Mains		
Client:	Victor Valley Wastewater Reclamation Authority	**Date:**	December 2009

INTRODUCTION

This Design Information Memorandum (DIM) No. 4B describes the regulatory framework and permitting requirements for the proposed Apple Valley Water Reclamation Plant (WRP) effluent disposal options. Disposal options include waste disposal with percolation ponds, direct groundwater recharge, indirect groundwater recharge, and incidental groundwater recharge.

DEFINITION OF TERMS

- **Reclaimed water** – water that, as a result of treatment of domestic wastewater, is suitable for direct beneficial use or a controlled use that would not otherwise occur (Title 22).
- **Recycled water** – "water that, as a result of treatment of waste, is suitable for direct beneficial use or a controlled use that would not otherwise occur." The act of reclaiming and using water, otherwise wasted, for beneficial purposes. Synonymous with "wastewater reclamation and reuse". Water recycling includes the process of treating wastewater, storing and distributing the recovered water, and the actual use of the reclaimed water.
- **Wastewater reclamation** – the treatment or processing of wastewater to make it reusable, normally in accordance with regulations established by the California Department of Public Health (CDPH) and the California Regional Water Quality Control Boards (RWQCB).
- **Water reuse** – the intentional or deliberate beneficial use of treated wastewater.
  - **Direct non-potable water reuse** – the use of recycled water where there is a direct link from the treatment system to the reuse application, such as landscape irrigation or other application via a dual distribution system or separate dedicated conveyance line.
  - **Direct beneficial use** (Title 22 term and definition) – use of recycled water, which has been transported from the point of production to the point of use without an intervening discharge to waters of the State.
  - **Indirect reuse** – mixing, dilution and dispersion of recycled water by discharge to an impoundment, receiving water or groundwater aquifer prior to reuse, such as in groundwater recharge. Indirect reuse does not normally constitute planned (or deliberate) reuse.
  - **Unplanned (or incidental) reuse** – diversion/extraction from a surface water body or groundwater basin downstream of a treated wastewater discharge. An accepted practice throughout the world for centuries. Example: riverbed or percolation pond recharge of an underlying groundwater aquifer with a blend of runoff, natural flows

and treated wastewater, which in turn, is withdrawn by down-gradient users for domestic or industrial water supplies. In the Mojave Basin, nearly all wastewater effluent is incidentally recycled in this manner.

  - **Direct potable water reuse** – deliberate/planned/intentional use of highly treated recycled water to augment drinking water supplies, i.e. incorporation of recycled water into a potable water supply system, *without* relinquishing control over the resource (e.g., Occoquan Reservoir, Virginia).
  - **Indirect potable water reuse** – addition of an intermediate step in the hydrologic cycle whereby recycled water is mixed with surface or groundwater sources prior to drinking water treatment (e.g., Orange County Water District Project).
  - **Non-potable water reuse** – all water use applications other than drinking water supplies; the dominant mode of wastewater reuse throughout the world.

- **Intentional (artificial) groundwater recharge** – augmentation of the natural movement of surface water into underground formations either directly (e.g., injection well) or indirectly (e.g., percolation basin or infiltration gallery).
  - **Direct artificial groundwater recharge** – water introduced into an aquifer via injection wells.
  - **Indirect artificial groundwater recharge** – spreading surface water on land so that it infiltrates through vadose zone (the unsaturated layer above the water table) down to the aquifer; methods include over-irrigation, construction basins, or making artificial changes to natural conditions (e.g., modifying a stream channel such as the Santa Ana River).
- **Incidental (unintentional) groundwater recharge** – the unplanned or indirect infiltration of water to an aquifer from agricultural or landscape irrigation or discharge to a stream or river (e.g., Mojave River).

REGULATORY FRAMEWORK

The overall regulatory framework associated with wastewater reclamation and water reuse is described below. The framework is organized into three levels: federal, state, and local.

Federal

State of California recycled water regulations are influenced by federal regulatory policies and guidelines. The three federal agencies most involved in water management issues are the U.S. Environmental Protection Agency (USEPA), U.S. Army Corps of Engineers (USACOE) and U.S. Bureau of Reclamation (USBOR). The USEPA is responsible for administration of the Clean Water Act, provides National Pollutant Discharge Elimination System (NPDES) oversight, guidelines, and has advisory roles for reclamation and reuse issues. The USACOE is responsible for wetlands protection, enhancement and development using recycled water. The USBOR is responsible for water resource management improvement programs, which include identification and investigation of water reclamation and reuse opportunities in the western U.S. The USBOR also participates in the construction of identified regional water recycling projects and development of water conservation programs involving reuse.

State

The regulatory burden for wastewater reclamation and water reuse in the U.S. rests primarily with states. Regulation of water recycling in California is the responsibility of two agencies, the State Water Resources Control Board (SWRCB) and the California Department of Public Health (CDPH). Waste discharge requirements (WDR) are issued to treated wastewater dischargers by one of nine Regional Water Quality Control Boards (RWQCB). WDR can be used in conjunction with NPDES permits or water recycling requirements (WRR). WDR/WRR permits include water quality and public health protections that incorporate standards found in Title 22 (Water Recycling Criteria) of the California Code of Regulations. A single discharger may necessitate both NPDES and WRR permits to cover seasonal or continuous disposal of a portion of the effluent and water recycling of the other portion.

State recycled water use regulations can be adapted for specific applications and revised for new users. The CDPH has the authority and responsibility to establish health-related standards for production and use of recycled water. The California Water Code provides for the nine RWQCB to establish water quality control plans, which are developed to protect both surface water and groundwater, and to prescribe and enforce WRR (in conjunction with CDPH). The RWQCB has the regulatory responsibility for water recycling projects and programs in whose jurisdiction the wastewater reclamation plant and/or use sites are located.

The legal context of recycled water regulations in California involves overlapping public health, water quality, water conservation, and water rights issues. Water recycling in California is accomplished with the involvement of numerous entities at all levels of government and, in some cases, investor-owned utilities. Water supply and wastewater districts are primarily responsible for the planning, design, and implementation of local recycled water projects.

WDR/NPDES Permits

As previously stated, WDR can be used in conjunction with NPDES permits. The NPDES program developed by USEPA is a permitting program related to wastewater discharge under the Clean Water Act (CWA). Under this program, any facility discharging pollutants from any point source (including man-made conveyance structures such as a pipe or ditch) into waters of the U.S. must obtain a permit. The primary purpose of the program is to ensure that surface water discharge protects the water quality standards and anticipated and designated uses of those waters. The federal NPDES program has been delegated to California and is administered by the RWQCB; however, NPDES permits must receive federal review.

The NPDES permits are provided here for information only. NPDES permit will not be pursued for this project.

WDR/WRR Permits

The RWQCB may prescribe WDR and WRR where recycled water is used, or proposed to be used, if it determines it is necessary to protect public health, safety, or welfare (Water Code S.13523). WDR/WRR permits are not part of the NPDES program and do not receive federal review. Where recycled water criteria have been established by CDPH, no person or entity may either reclaim wastewater or use it until the RWQCB has either issued WRR or waived the necessity for such requirements (Water Code S.13524). This issuance of WRR is done in consultation with CDPH and with consideration of their recommendations.

Master Permits

The RWQCB historically issued permits with WDR for producers of recycled water (agencies) and permits with WRR for end-users. For reasons of efficiency, economy, and control, a “master permit” was developed to bring recycled water production, distribution and use under one regulatory document, typically issued to the agency that produces the recycled water. A single retail water purveying agency (with its own treatment plant) that produces and distributes recycled water to its own customers can be issued a master permit with resulting regulatory benefits.

Water Rights

Water rights are legally defined as the right to use water, which is different than ownership. A state typically retains ownership of water within its boundaries, and water rights laws govern the rights of government and private entities to use such water for recreation, irrigation and other activities. Water rights laws are of particular interest to recycled water projects because they can either promote or restrain water reuse depending on how the state views the use and return of recycled water. California law explicitly states that recycled water, where available and economically justified, must be used in lieu of potable water for meeting non-potable needs.

Most water rights issues are decided according to state law. However, in some cases, federal law may also impact planning of water reuse projects. This typically occurs when the project affects more than one state, region, or protected Native American tribe. The federal government may also claim jurisdiction in disputes between states regarding allocation of limited water supplies.

Local

Federal and state laws, regulations and policies do not prescribe requirements for implementation of water reuse programs and water recycling projects at the local level. Federal and state regulations generally acknowledge the importance of local program flexibility necessary to manage recycled water as a water resource. Local programs have the flexibility as well as broad authority needed to protect the health, welfare, and safety of their customers.

METHODS OF DISPOSAL

The primary reuse option is to supply recycled water to end-users for agriculture and landscape irrigation. This will require a recycled water program, which includes a Recycled Water Master Permit, establishment of an Ordinance, end-user letters of commitment, construction of a recycled water distribution system, and a site conversion program. The alternative disposal options described below provide for disposal of treated wastewater when distribution to end-users is not available. The selected disposal method will be relied upon during the interim period after the Apple Valley WRP is constructed and when the recycled water program is established. Table 4B.1 summarizes the disposal methods described below and their respective permitting requirements.

An additional scenario becomes available after the recycled water program is established. Design of the recycled water distribution system should account for seasonal variations in recycled water demand and provide for storage to offset both diurnal and seasonal variations. A storage system that is sized to account for potential use scenarios could allow for no disposal of recycled water.

Table 4B.1 Agencies Involved in the Permitting of Recycled Water Reuse and Effluent Disposal
Apple Valley WRP Design Information Memoranda
Victor Valley Wastewater Reclamation Authority, California

Item	RWQCB	CDPH	DOFG	Federal (1)
Waste Disposal (Percolation Ponds)	X			
Indirect Groundwater Recharge (Percolation Ponds)	X	X		
Direct Groundwater Recharge (Injection Wells)	X	X		
Incidental Groundwater Recharge (Mojave River)	X		X	X

Note:

(1) Federal involvement will vary based on the disposal option, but may include federal review of NPDES and NEPA documentation (USEPA), U.S. Fish and Wildlife Service, and U.S. Army Corps of Engineers.

Waste Disposal (Percolation Ponds)

Disposal of treated wastewater to percolation ponds can be accomplished by identifying percolation as a treatment process for waste disposal. This characterization would require coordination with the RWQCB and a permit (WDR).

The RWQCB have recently become more concerned with the impacts of using percolation ponds for waste disposal on the groundwater table. They have begun imposing stricter discharge standards in WDR, including requirements for nutrient removal and restrictions on disinfection by-products. The requirements are likely to be similar to recent permit revisions issued to the VVWRA Westside WRP and other inland utilities. More stringent water quality requirements would entail more advanced treatment processes and more involved monitoring.

The conceptual sizing of percolation ponds for the Apple Valley WRP is approximately 20 acres and provides approximately 16 acres of usable land for percolation. Based on percolation rates established for other sites of similar soil characteristics (sandy soil), it is estimated that approximately 1 acre of percolation area will be required for the proposed 1 mgd treatment plant. See Figure 4B.1 for the two alternative conceptual locations and an example pond layout to maximize land use.

Indirect Groundwater Recharge (Percolation Ponds)

Use of percolation ponds for indirect (artificial) groundwater recharge would require coordination with the RWQCB with consultation from CDPH. Approval from the RWQCB would entail water quality requirements based on spreading area operations, soil characteristics, hydrogeology, residence time, and distance from nearest withdrawal point. It would likely require advanced treatment of tertiary effluent (such as reverse osmosis, RO), potential supplementation of injected water with potable water, environmental permitting and monitoring, and an environmental impact report (CEQA documentation).

There may be water rights issues associated with groundwater recharge if it is determined that recharge of the aquifer will impact the quantity or quality of the established users of the aquifer. The potential impacts of mitigating water rights considerations would need to be evaluated further.

Direct Groundwater Recharge (Injection Wells)

Direct groundwater recharge through the use of injection wells provide the advantage of reduced land area requirements, but impose more stringent water quality requirements. Approval and water quality requirements for indirect groundwater recharge typically assume a credit for the soil “barrier” between the percolation pond and the aquifer. Injections wells eliminate this credit, resulting in requirements for more advanced treatment and more stringent parameter compliance in addition to more complicated monitoring.

Incidental Groundwater Recharge (Mojave River)

The permitting requirements for direct discharge to the Mojave River would likely be similar to the requirements imposed on the Westside WRP. This option will require coordination with the RWQCB for an NPDES permit with review, consultation and input from USEPA and the Department of Fish and Game (DOFG). In addition, there may be water rights issues related to adding a new flow to the Mojave River because it may impact the quantity or quality of established users.

CONCLUSIONS AND RECOMMENDATIONS

The permitting requirements for each alternative present unique challenges. Table 4B.1 provides a summary of the alternative disposal options when direct non-potable reuse is not available; they include disposal through percolation ponds, indirect groundwater recharge, direct groundwater recharge through injection wells, and incidental groundwater recharge (discharge to Mojave River). Given the permitting requirements for each option, waste disposal through percolation ponds appears to offer the greatest benefit. The increasing concern over the impact of waste disposal through percolation ponds will likely increase the water quality requirements and should be considered in the planning and design of the proposed treatment plant. The actual acreage required for the percolation ponds will be determined once the necessary geotechnical and hydrogeological investigation for the proposed disposal site(s) are completed.

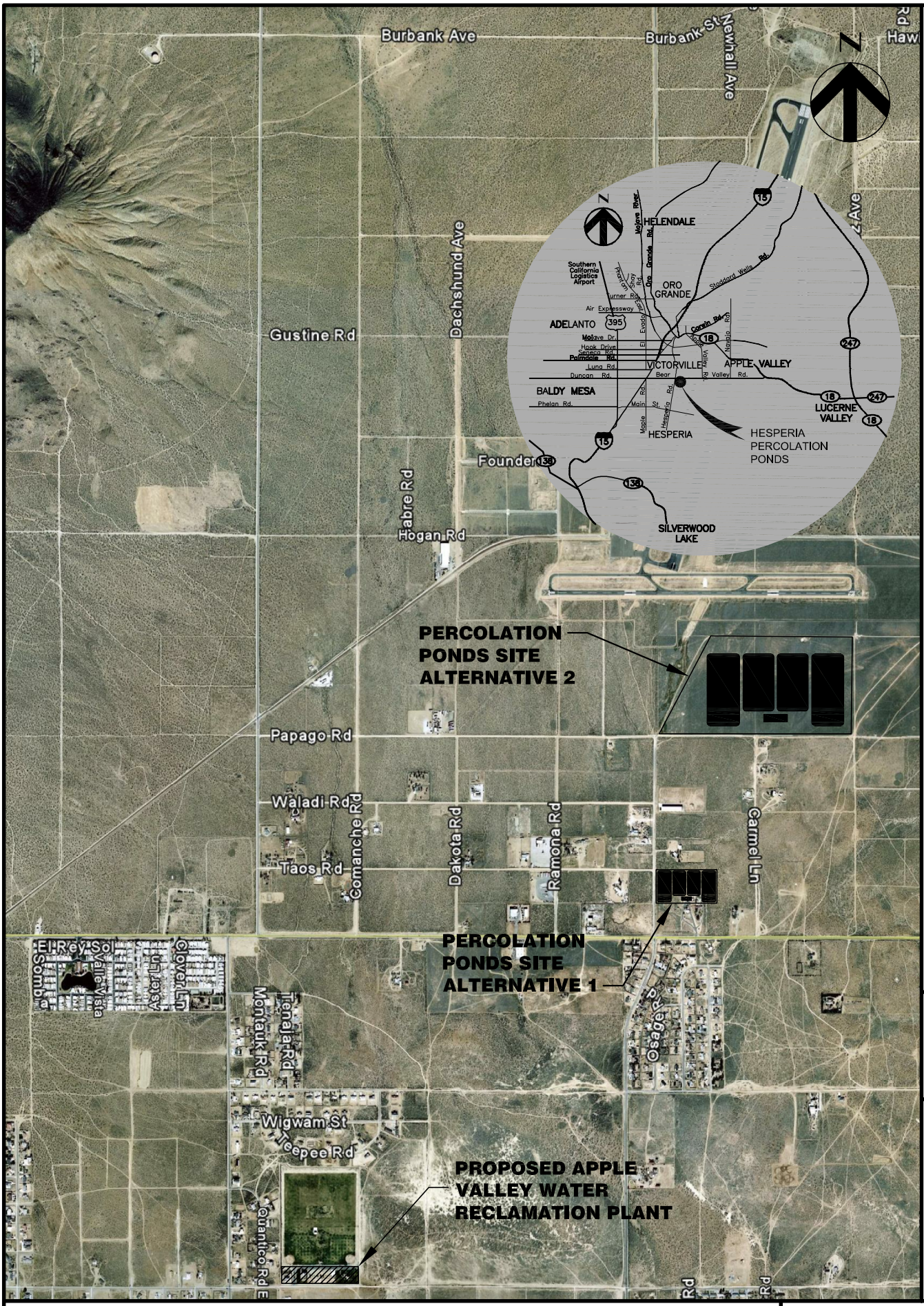

VICTOR VALLEY WASTEWATER RECLAMATION AUTHORITY
APPLE VALLEY WRP - PRELIMINARY DESIGN REPORT

HDR

carollo

APPLE VALLEY WATER RECLAMATION PLANT
PERCOLATION PONDS SITE - ALTERNATIVES 1 & 2

FIGURE 4B.1

APPLE VALLEY WATER RECLAMATION PLANT

DESIGN INFORMATION MEMORANDUM NO. 5B

PRELIMINARY TREATMENT

Project Name:	Hesperia and Apple Valley Scalping WRPs, Raw Sewage Lift Station and Force Mains		
Client:	Victor Valley Wastewater Reclamation Authority	**Date:**	December 2009

INTRODUCTION

Raw wastewater from the influent pump station must be screened prior to entering the biological treatment process to remove items such as rags, fibers, and other large debris.

The Apple Valley WRP will be equipped with membrane bioreactor (MBR) technology and therefore pre-membrane fine screening will be required to protect the membranes from damage by debris and to optimize membrane performance. The purpose of this DIM-5B is to summarize the proposed preliminary treatment requirements of the Apple Valley WRP.

PROCESS EQUIPMENT

Influent Screening

A wide variety of coarse and fine screens is available for preliminary treatment depending on the degree of removal desired. Coarse screens generally have openings greater than 1/2 inch, and allow more rags and solids to pass through. Fine screens have openings less than 1/2 inch and generally remove a greater degree of smaller debris. Screening options typically used for wastewater pretreatment include in-channel screens, traveling band screens, and internally fed rotating drum screens.

Based on the recommendation of potential MBR manufacturer (GE/Zenon), the pre-membrane screening should be fine screen, typically internally fed rotating drum type. The fine screening should be equipped with perforated plate style drum screen (in lieu of a wedge wire and other configuration) to better screen the stringy or fibrous material that could collect in the MBR basins. These fibers could ultimately tangle around membrane fibers, affecting the operation of the system and the life span of membranes.

Based upon the information presented and decisions made at the June 11, 2009 Technical Workshop, a single stage 2-mm micro screen approach will be used. Two units (one operating, on standby) will be provided for Phase 1 (1.0 mgd) and Phase 2 (2.0 mgd).

Screenings Washer/Compactor

The screenings captured in the fine screens contain putrescible organic matters. Therefore, a screenings washer/compactor will be provided for each drum screen unit to break up and remove the organic matter in the screenings, and compress and dewater the washed screening prior to discharge to a dumpster. A screw type washer/compactor will be provided for washing and dewatering screen solids removed by the screens. Screenings wash water will be discharged to a drain for return back into the biological process.

Headworks Odor Control System

The influent screening equipment and screening dumpsters will be housed in a building. Foul air will be withdrawn and routed to an odor control facility. Typical odor control options include chemical scrubber, carbon absorber, and biofilter. Two technologies are proposed for the proposed Headworks Building odor control system:

- Low-profile wet chemical scrubber
- In-ground biofilter

Low-Profile Wet Chemical Scrubber

Wet chemical scrubbing relies on transferring vapor phase odorants from foul air to scrubbing solutions via absorption and chemical oxidation. Wet chemical scrubbers are capable of handling large air flow rates and high intensity odor, and are typically used at wastewater treatment plants. They can be single or multi-stage systems that use absorption and oxidation to remove air contaminants.

The advantages of wet chemical scrubber odor control include removal of high odor concentrations and air flows, as well as removal of a wide variety of odor-causing compounds. The disadvantages of this method include high chemical and power consumption, high maintenance costs, and potential for chlorinated compounds and bleach odor emission.

In-Ground Biofilter

Biofilter bed consists of natural media (soil, compost, peat, or mixture of variety materials) with indigenous microorganisms that can grow on the media surface and metabolize odorous compounds absorbed/adsorbed from the gas stream. Biofilter uses absorption/adsorption and biooxidation mechanisms to remove odorants from foul air. Biofilters can be modular or in-ground type, and is typically used for low to moderate odor air volumes.

The advantages of biofilter odor control include degradation of odor compounds, low energy requirements, and no chemical addition. The main disadvantage of using biofilters is the large land area for installation and the requirement of maintenance of media for moisture content.

Based on discussions with VVWRA representatives, an in-ground biofilter will be provided for the Headworks Building odor control at the Apple Valley WRP. In-ground biofilters consist of a network of perforated lateral piping within a layer of drain rock, covered with a screening material and overlaid by a layer of porous filter media. The soil biofilter is usually equipped with an irrigation system to keep the bed moist, and a drainage system to remove any accumulated moisture. Foul air will pass through soil beds. Moistened soil provides contact surfaces for microbial reactions to oxidize odorants.

Based on the preliminary Headworks Building size, assuming loading rate of 2.7 cubic feet per minute per square foot (cfm/sf) of soil bed area, the preliminary in-ground biofilter size will require a land area of approximately 35 feet x 35 feet for Phase 1 (1.0 mgd) and Phase 2 (2.0 mgd).

PROCESS LAYOUT

The influent screens, screenings washer/compactors and dumpsters will be located in the upper level of proposed Headworks Building. Preliminary headworks layout and sections are presented in Figures 5B.1 and 5B.2.

SUMMARY AND RECOMMENDATIONS

The preliminary treatment at the Apple Valley WRP will consist of the following components:

- Two 2-mm rotary drum screens. To reduce long-term capital costs of expanding the WRP from 1.0 mgd to 2.0 mgd, it is proposed to install 2.0 mgd screens, rather than 1.0 mgd screens.
- One screenings washer/compactor will be provided for each screen.
- In-ground biofilter for Headworks Building odor control.

The recommended influent screening design criteria for the Apple Valley WRP is summarized in Table 5B.1.

Table 5B.1 Influent Screening Recommended Design Criteria
Apple Valley WRP Design Information Memoranda
Victor Valley Wastewater Reclamation Authority, California

Parameters	Phase 1 (1mgd)	Phase 2 (2 mgd)
Screen Type	Rotary drum, perforated plate	
Stage of Screening	1 stage	
Perforation Diameter, mm	2	
Screen Capacity, mgd, each	2.0	
Number of Screens	2 (1 operation; 1 standby)	
Number of Washer/Compactors	2 (1 operation; 1 standby)	
Type of Washer/Compactors	Screw type	
Type of Odor Control	In-ground biofilter	

Grit removal is not provided in the preliminary Phase 1 design, other than what will be removed via the screening processes. Provisions for future grit removal (i.e. physical space on the plant as well as sufficient hydraulic head in the plant hydraulic profile) will be provided.

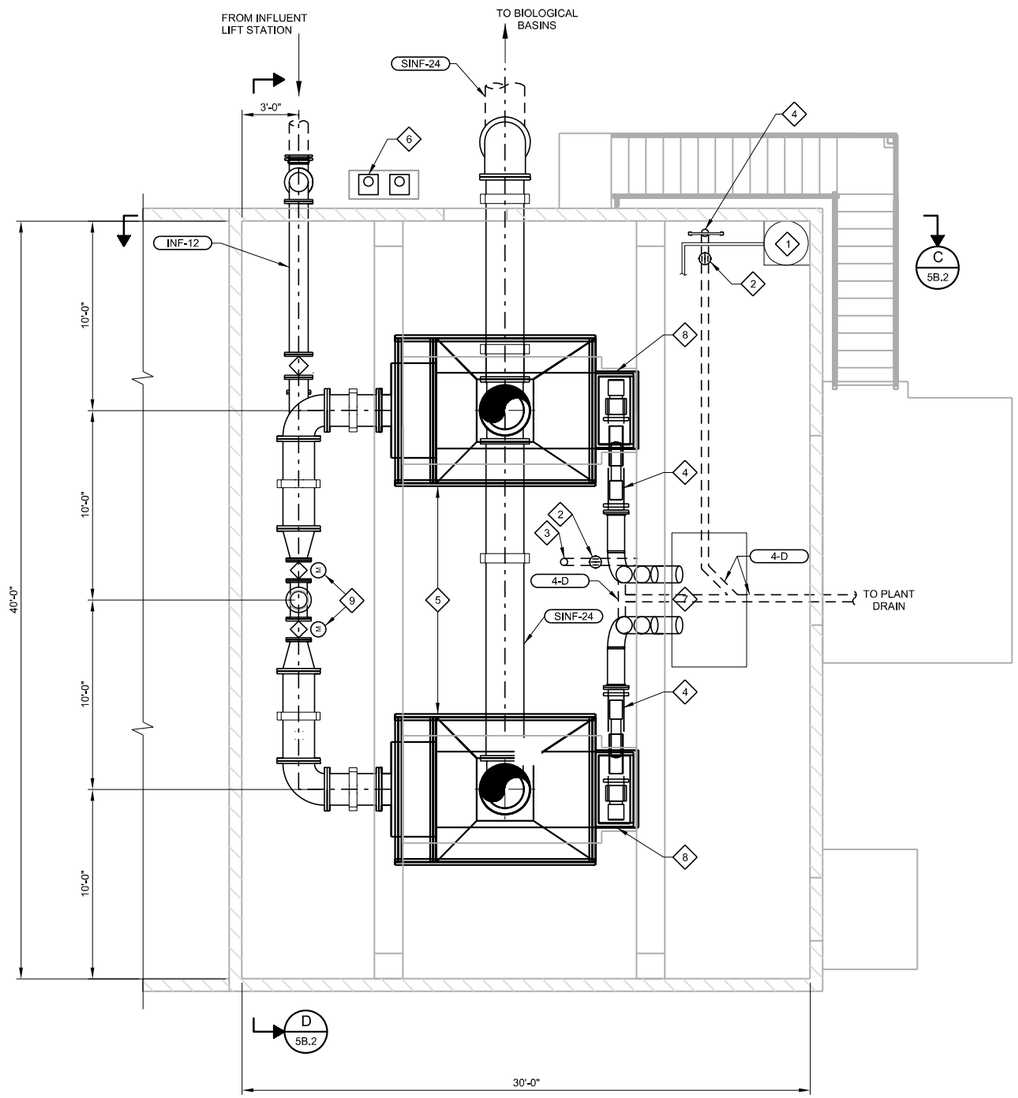

B PLAN
SCALE: 1/4" = 1'-0"
FILE: 7986A10-M-04-101

0 2' 4' 8'

NORTH

KEY NOTES:

1. ELECTRIC WATER HEATER
2. FLOOR DRAIN
3. FLOOR CLEAN OUT
4. SCREENINGS COMPACTOR
5. ROTARY DRUM FINE SCREEN(S)
6. FINE SCREENS LUBE OIL PUMPS AND MOUNTING PAD.
7. 3CY DUMPSTER
8. BARREL SCREEN DISCHARGE CHUTE FLANGE BELOW
9. MOTOR OPERATED 12" ECC PLUG VALVE

VICTOR VALLEY WASTEWATER RECLAMATION AUTHORITY
APPLE VALLEY WRP - PRELIMINARY DESIGN REPORT

HDR

carollo

INFLUENT SCREENING PLAN

FIG 5B.1

KEY NOTES:

1. ROTARY DRUM FIRE SCREEN
2. SCREENINGS WASHER/COMPACTOR
3. COMPACTOR DISCHARGE PIPING AND COLLECTIONS DUMPSTER.
4. 316 STAINLESS STEEL SOLIDS DISCHARGE CHUTE
5. 8" MAGNETIC FLOWMETER
6. FLOOR CLEAN OUT (4"Ø)
7. 12" x 8" REDUCER

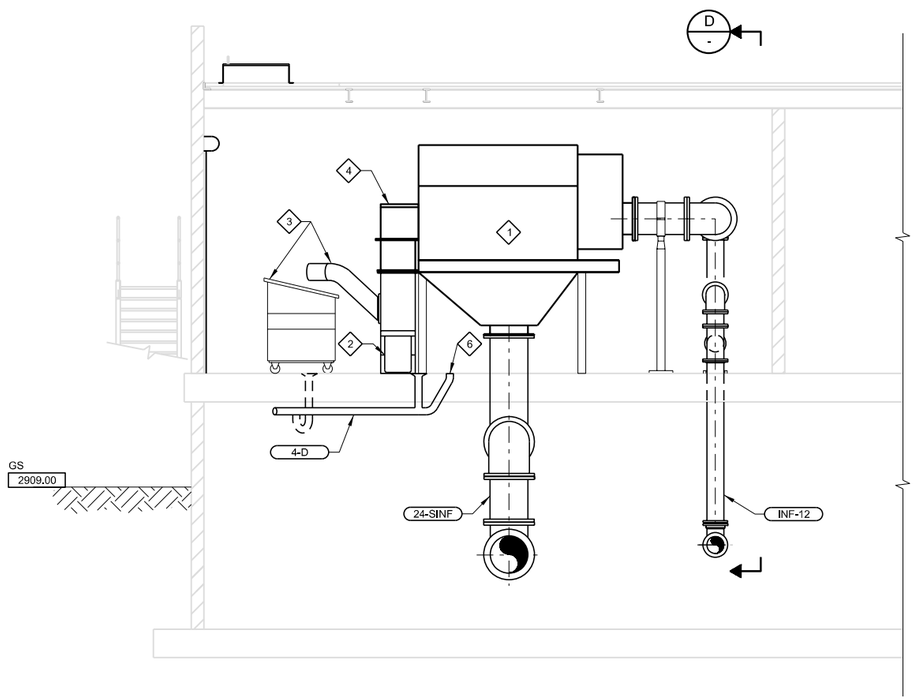

C 5B.1 **SECTION**
SCALE: 1/4' = 1'-0"
FILE: 798610-M-04-301.dgn
0 2' 4' 8'

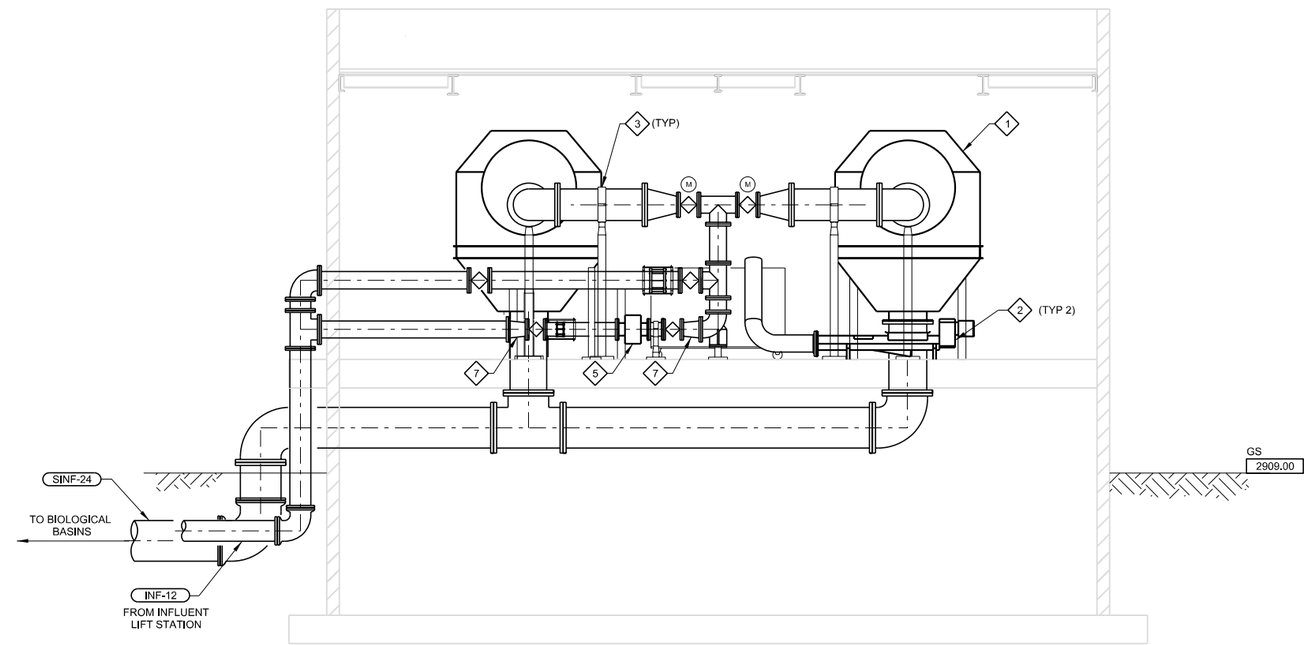

D 5B.1 **SECTION**
SCALE: 1/4' = 1'-0"
FILE: 798610-M-04-301.dgn
0 2' 4' 8'

VICTOR VALLEY WASTEWATER RECLAMATION AUTHORITY
APPLE VALLEY WRP - PRELIMINARY DESIGN REPORT

HDR

carollo

INFLUENT SCREENING SECTIONS

FIG 5B.2

DESIGN INFORMATION MEMORANDUM NO. 6B
SECONDARY TREATMENT AND MEMBRANE FILTRATION

Project Name:	Hesperia and Apple Valley Scalping WRPs, Raw Sewage Lift Station and Force Mains		
Client:	Victor Valley Wastewater Reclamation Authority	**Date:**	December 2009

INTRODUCTION

The biological treatment process is designed to remove biodegradable organic matter, suspended solids, and nutrients from the screened influent wastewater flow. Many different biological wastewater treatment technologies exist, and they represent a wide range of potential effluent quality, operational complexity, and capital cost.

As requested in the Request for Proposal (RFP) for this project, secondary/tertiary treatment at the Apple Valley Water Reclamation Plant (WRP) will consist of an activated sludge process for biochemical oxygen demand (BOD) reduction and nutrient removal, coupled with membrane bioreactor (MBR) technology for solids-liquid separation. Design flows are 1.0 million gallons per day (mgd) for Phase 1, and 2.0 mgd for Phase 2. Process modeling results for the proposed design are presented in DIM No. 3B, and include the basis of design for the secondary treatment process. This DIM No. 6B presents the process description and design criteria for the secondary treatment and membrane filtration facilities at the Apple Valley WRP.

PROCESS DESCRIPTION

The MBR process was selected by VVWRA for the new Apple Valley WRP. The MBR process combines the biological treatment process with membrane filtration to achieve secondary treatment and advanced filtration. This MBR configuration replaces the function of secondary clarifiers and granular media or cloth disk filtration in a conventional wastewater treatment process.

The biological nutrient removal (BNR) process is a critical component of the overall treatment system. As described in DIM No. 3B, a Modified Ludzack-Ettinger (MLE) process coupled with a Membrane Bioreactor (MBR) system is recommended to achieve a Total Nitrogen (TN) limit of 10 milligrams per liter (mg/L). The biological treatment process basins for the Apple Valley WRP are designed to accommodate a four-stage Bardenpho configuration with relatively minor modifications, in order to comply with a potential future TN limit of 5 mg/L.

The purpose of membrane filtration at the Apple Valley WRP is to remove suspended solids in the mixed liquor from the biological treatment process and to provide a high-quality filtrate to optimize the efficiency of the UV disinfection process. Filtration is a vital component in producing reclaimed water to meet the effluent quality goals set for this project.

PROCESS DESIGN CRITERIA

Biological Treatment Basins

The biological treatment basins are configured as single pass basins, with internal baffles to separate the different anoxic (un-aerated) zones to achieve denitrification, and aerobic (aerated) zones to achieve nitrification, BOD and TSS removal. The baffles provide a physical separation between the different treatment zones within the basins, and are designed to promote serpentine flow and minimize potential short-circuiting and back-mixing between adjacent zones.

Screened wastewater and return activated sludge (RAS) from the MBR basins will be combined in a splitter structure (channel), and equally distributed between the biological treatment basins. Upward opening gates located at the bottom of the splitter channel will feed each biological treatment basin, and will also provide the ability to isolate basins for maintenance. Mixed liquor will flow through a first anoxic zone, a “swing zone”, two aerobic zones, and then a final “swing” zone. A “swing” zone is defined as a zone that can be operated either under aerated or un-aerated (mixed) conditions because it is equipped with both mixers and aeration diffusers. Provisions will be made to install an internal mixed liquor recycle pump in the second aerated zone, with a pipe running inside the basin and discharging into the first anoxic zone.

Mixed liquor will then flow over a weir and into the feed-forward wet well. Submersible pumps will transfer the mixed liquor from the wet well to the MBR basins. The feed-forward pump wet well can also provide equalization volume to compensate for differences between the plant influent flow and the effluent (permeate) flow from the membrane system. The biological process basins are designed with 2 feet of additional freeboard that can provide equalization volume to store peak flows. RAS flow will be returned by gravity from the MBR basins to the splitter channel at the head of the biological process basins.

Biological Treatment Basins Redundancy and Design Criteria

The redundancy of each unit process is defined herein as the treatment capacity as a percentage of the design flow, when operating with a basin out-of-service and while maintaining the effluent quality goals. For end-of-line plants, it is common practice to design fully redundant systems, i.e., provide standby basins for the different unit processes. However, for plants that have the ability to bypass influent flow (i.e., scalping plants), the level of redundancy required is less critical.

Table 6B.1 presents alternatives with different levels of redundancy for the biological treatment basins. The required biological treatment basins total volume is governed by the maximum month loadings presented in DIM No. 1B. Maximum month loading conditions result from increases in wastewater constituent concentrations, and not from an increase in hydraulic flow. The maximum month load peaking factors for BOD, TSS, and TKN are 1.5, 1.5, and 1.3, respectively.

Because the total required volume for biological treatment is determined by the maximum month loading conditions, the alternatives presented in Table 6B.1 require the same total basin volume at the end of Phase 2 (2.0 mgd), and at buildout (4.0 mgd). The number of basins for each alternative results in a different level of redundancy, expressed as a percentage of the design flow at annual average loadings when operating with one basin out-of-service.

Alternative C is recommended for the Apple Valley WRP. Alternative A does not provide any redundancy in Phase 1, and any maintenance performed in the biological treatment basins would result in a diversion of the entire plant flow to the interceptor system. Alternative B results in 4 basins for Phase 2 and a level of redundancy that exceeds standard practice of 100 percent redundancy at annual average day loadings. Alternative C is recommended because it provides 100 percent redundancy with one basin out-of-service under annual average day loading for both phases (1 and 2).

Table 6B.1 Biological Treatment Basins Redundancy Alternatives
Apple Valley WRP Design Information Memoranda
Victor Valley Wastewater Reclamation Authority, California

Phase	Alternative	Redundancy, % (1)	Number of Trains	Annual Average Day Flow Capacity, mgd			Maximum Month Average Day Flow Capacity, mgd
				Each Train	One Train Out-of-Service (n-1)	All Trains in Service (n)	All Trains in Service (n)
1 (1.0 mgd)	A	0	1	1.5	0.0	1.5	1.0
	B	75	2	0.75	0.75	1.5	1.0
	C	**100**	**2**	**1.0**	**1.0**	**2.0**	**1.3**
2 (2.0 mgd)	A	50	2	1.5	1.5	3.0	2.0
	B	125	4	0.75	2.25	3.0	2.0
	C	**100**	**3**	**1.0**	**2.0**	**3.0**	**2.0**

Notes:
(1) Expressed as a percentage of the annual average design flow and load for each phase.

Table 6B.2 presents a summary of the design criteria for the biological treatment basins, which was established through a process modeling evaluation for the proposed design (DIM No. 3B).

Table 6B.2 Biological Treatment Basins Design Criteria
Apple Valley WRP Design Information Memoranda
Victor Valley Wastewater Reclamation Authority, California

Parameter	Unit	Phase 1 (1.0 mgd)	Phase 2 (2.0 mgd)
Type of Basins	-	Single Pass, multiple zones	
Number of Parallel Trains	-	2	3
Basin Volume, each	MG	0.381	
Total Basin Volume	MG	0.763	1.144
Side Water Depth	ft	17 to 19 (1)	
Basin Width (2)	ft	20	

Table 6B.2 Biological Treatment Basins Design Criteria
Apple Valley WRP Design Information Memoranda
Victor Valley Wastewater Reclamation Authority, California

Parameter	Unit	Phase 1 (1.0 mgd)	Phase 2 (2.0 mgd)
Zone Lengths (2)			
Zone A – Anoxic	ft	10	
Zone B – Swing (Aerobic / Anoxic)	ft	10	
Zone C – Aerobic	ft	55	
Zone D - Aerobic	ft	55	
Zone E - Swing (Aerobic / Anoxic)	ft	20	
Total Basin Length	ft	150	
Feed-Forward Wet Well Width (2)	mgd	20	
Feed-Forward Wet Well Length (2)	mgd	40	60

Notes:
(1) Normal side water depth is 17 ft, with the ability to operate up to 19 ft during periods of flow equalization.
(2) Inside dimensions.

Anoxic Zone Mixing

Submersible propeller mixers are recommended to provide anoxic zone mixing. Submersible propeller mixers are a reliable mixing device and are commonly used in many wastewater treatment plants. To maximize mixing performance in the anoxic zone, it is beneficial to position the mixer to produce a well-defined circulation in the tank. This technique slows tank losses and evenly distributes shear forces and velocities throughout the tank. In general, the power input per unit volume of liquid is used as an indication of a mixer's effectiveness. One mixer per zone is recommended for the biological treatment basins of the Apple Valley WRP.

Several variations of submersible propeller mixers are available, including the number of impellers (single vs. dual) and type of mount (deck-mounted vs. rail-mounted). Some operators have identified problems with leaking oil gearboxes for deck- or bridge-mounted mixers. One alternative to this problem is the use of submersible, rail-mounted mixers, which are recommended for this project. While they need to be retrieved from the mixed liquor for maintenance (which typically includes semi-annual grease lubrication), rail-mounted mixers are high efficiency and typically have a lower capital cost than deck- or bridge-mounted units.

Aeration System

The overall aeration system will be designed to effectively control the amount of air delivered to the process. The design will also include sufficient monitoring and control points to allow for the proper control of the activated sludge process.

The aeration system includes the aeration blowers that provide the required process air, and the aeration diffusers that distribute the air and transfer the oxygen in the air into the mixed liquor. The oxygen transfer efficiency of the aeration diffusers has a significant impact not only on the required blower capacity (capital costs), but also on the power consumption of the aeration

blowers (operational costs). More efficient oxygen transfer translates to reduced blower capacities required, and reduced operational costs due to the reduced power consumption.

Fine bubble diffusers are recommended for the Apple Valley WRP aeration system due to their higher oxygen transfer efficiency, as compared to coarse bubble aeration. Membrane disc type fine bubble diffusers are used in many WRP facilities, including the Westside Water Reclamation Plant.

The recommended blower type is positive displacement. The standard GE/Zenon MBR process blowers are also positive displacement. Maintaining commonality between the biological treatment blowers and the MBR blowers facilitates maintenance and training for operations staff. Other types of blowers include high-speed turbo and centrifugal blowers. While high-speed turbo blowers can be more efficient, the capital cost can be considerably higher (approximately 20 percent more per preliminary estimates). Centrifugal blowers are not recommended for this application due to the variable discharge flows under the expected range of discharge pressures, and due to the higher capital cost for the size range required.

Table 6B.3 presents the basic preliminary design criteria for the aeration system.

Table 6B.3 Aeration System Preliminary Design Criteria
Apple Valley WRP Design Information Memoranda
Victor Valley Wastewater Reclamation Authority, California

Parameter	Unit	Phase 1 (1.0 mgd)	Phase 2 (2.0 mgd)
Type of Diffusers	-	Fine bubble, membrane discs	
Blower Air Requirement	scfm	1,800	3,800
Number of Blowers (Duty + Standby)	-	2 + 1	4 + 1
Blower Capacity, each	scfm	950	
Firm Blower Capacity, total	scfm	1,900	3,800
Estimated Discharge Pressure (1)	psig	9.4	

Notes:
(1) Estimated discharge pressure includes the additional 2 ft of side water depth provided for potential equalization. At 17 ft of SDW, the estimated discharge pressure is 8.5 psig.

Feed-Forward Pumping

The purpose of the feed-forward wet well pumps is to transfer the activated sludge from the biological process basins to the MBR basins for the final solids-liquid separation process via the membrane filtration system. The wet well can provide some equalization volume to handle variations in the influent flows that are beyond the production capacity of the membranes. In addition, the feed-forward pump station allows the accurate control of the flow from the aeration basins to the membrane zones. While other approaches use downward-opening weir gates to control flow into membrane zones, and equalize in the aeration zones, weirs are water level control devices which do not accurately control flow. The feed-forward pump station approach is superior in its ability to control both flow and level in an accurate fashion. The available flow equalization is discussed later in this memorandum. The feed-forward wet well will be located at the end of the biological process basins.

The proposed feed-forward pumps are non-clog, submersible, wet pit centrifugal pumps with variable speed control via variable frequency drives. The pumps will be provided with guide rails for easy retrieval from the wet well.

Table 6B.4 presents the design criteria for the feed-forward wet well. Three feed-forward pumps equipped with VFD drives will be provided at Phase 1 - two duty and one standby pump. At Phase 2, one of the pumps will require replacement with a larger capacity unit, and an additional pump will be required.

Table 6B.4 Feed-Forward Wet Well Design Criteria
Apple Valley WRP Design Information Memoranda
Victor Valley Wastewater Reclamation Authority, California

Parameter	Phase 1 (1.0 mgd)	Phase 2 (2.0 mgd)
Solids Content, %	0.8 (range between 0.7 and 1.0)	
Pump Type	Submersible, Centrifugal, Wet Pit	
Pump Motor Control	VFD	
Design Flow, mgd	5.0	10.0
Number of Pumps (Duty + Standby)	2 + 1	3 + 1
Pump Capacity	2 @ 2,350 gpm (3.4 mgd) 1 @ 1,100 gpm (1.6 mgd)	4 @ 2,350 gpm (3.4 mgd)
Firm Capacity, mgd	5.0	10.2
Total Capacity, mgd	8.4	13.5

Figure 6B.1 presents a preliminary plan and section of the biological treatment basins and feed-forward wet well.

Scum Control

Scum control can be a significant issue in MBR operation, and a positive means to waste scum from the surface of the liquid level in the mixed liquor should be provided in MBR plants. Therefore, the feed-forward wet well will be equipped with a downward-opening slide gate to remove floating scum and waste activated sludge (WAS) from the surface of the mixed liquor. In this manner, the scum and WAS can be simultaneously discharged to the WAS holding wet well, from where the submersible WAS pumps can send the wasted sludge and scum back to the interceptor. At buildout, each end of the feed-forward pump station will include downward-opening weir gates that allow the surface wasting of scum and WAS into each WAS pump station.

MBR System

MBRs consist of proprietary membrane filtration systems combined with a biological activated sludge treatment process. Because of the proprietary nature of the membrane system and its implications for design of the overall wastewater treatment process, the VVWRA selected a membrane system manufacturer at the beginning of the design process. The ZeeWeed® MBR system, manufactured by GE Water & Process Technologies, was selected as the membrane supplier for the new Apple Valley WRP MBR system.

The ZeeWeed® MBR system consists of membranes that are immersed in open tanks of aerated mixed liquor. The membranes are hollow fibers with fixed pore sizes to prevent suspended solids from passing through. Permeate pumps create a vacuum in the membrane fibers, which drives flow from the outside of the membrane fiber to the inside of the fiber, filtering the flow through the membrane.

The basic component of the ZeeWeed® membranes is a bundle of hollow membrane fibers called a membrane module. Each module consists of approximately 340 square feet of membrane area. Modules are grouped together into membrane cassettes, and multiple cassettes are configured into a membrane train. Each membrane train is equipped with a dedicated permeate pump.

There are two important design criteria determine the membrane area required in the system. One of these criteria is redundancy. Based on standard practice, a fully redundant MBR train is recommended for the Apple Valley WRP. Operating with one of the membrane trains out-of-service is known as the “n-1” condition. Designing the MBR system with the ability to reliably maintain water production at the design flow for the “n-1” condition provides a robust treatment process, capable of operating with an entire membrane train out-of-service. Several conditions result in the MBR system frequently operating with a membrane train out-of-service:

- Backpulsing or maintenance cleaning;
- Recovery cleaning; or
- Maintenance or repair.

Another key design criterion for the design of the MBR system is the flux through the membranes. Flux describes the rate of water filtered through the membrane measured in gallons per day per square foot of membrane area (gfd). Design fluxes need to be evaluated when the MBR system it is operating with all trains in service, and with one train out-of-service. A maximum design flux for these two operating conditions was established, so that the membranes are not subjected to excessive vacuum pressure from the permeate pumps. The maximum design fluxes for the Apple Valley WRP were selected as 14 gfd when all membrane trains are in service, and 18 gfd when one membrane train is out-of-service.

MBR System Redundancy and Design Criteria

Table 6B.5 presents alternatives with different levels of redundancy for the membrane filtration trains. The capacity of a given configuration of membrane trains, cassettes, and modules is determined by the net permeate flux through the membranes. The alternatives presented are based on producing the Phase 1 and Phase 2 design flows with all MBR trains in service. The number of MBR trains for each alternative results in a different level of redundancy, expressed as a percentage of the design average day flow.

Alternative D is recommended for Phase 1 of the Apple Valley WRP. Alternative F does not provide any redundancy in Phase 1, and any maintenance performed in the MBR trains would result in a diversion of the entire plant flow to the interceptor system. Alternative E results in a level of redundancy that would exceed standard practice for a scalping plant. Alternative D is recommended because it provides 50 percent redundancy with one MBR train out-of-service under Phase 1 flows, yet it provides the flexibility to re-evaluate redundancy needs for Phase 2, as expansions to either Alternative D or Alternative E are feasible. The recommended alternative requires that during periods when an MBR train is out-of-service, only 50 percent of the design influent flow can be pumped to the treatment system.

Table 6B.5 MBR Basins Redundancy Alternatives
Apple Valley WRP Design Information Memoranda
Victor Valley Wastewater Reclamation Authority, California

Phase	Alternative	Redundancy, % (1)	Number of Trains / Modules / Cassettes	Average Day Flow Capacity, mgd	
				One Train Out-of-Service (n-1)	All Trains in Service (n)
1 (1.0 mgd)	**D**	**50**	**2 / 3 / 42**	**0.5**	**1.0**
	E	100	3 / 2 / 42	1.0	1.0
	F	0	1 / 5 / 42	0.0	1.0
2 (2.0 mgd)	**D**	**50**	**2 / 5 / 42**	**1.0**	**2.0**
	E	100	3 / 4 / 42	2.0	2.0
	F	n/a	n/a	n/a	n/a

Notes:
(1) Expressed as a percentage ratio between the capacity with one basin out-of-service and the annual average design flow and load for each phase.

The recommended design criteria for the MBR system is presented in Table 6B.6. Membrane fluxes will be maintained below the established maximum design criteria for the “n” and “n-1” conditions by constructing two membrane trains. For the initial Phase 1 construction, each membrane train will be equipped with three membrane cassettes. To expand to the Phase 2 treatment capacity and maintain the same level of redundancy, two additional membrane cassettes will be added to each membrane train. Another alternative at Phase 2, if more redundancy is required, is to construct a third membrane train and install four cassettes per train. Both options are feasible by constructing the Phase 1 membrane trains with space for 5 cassettes per train. Alternatively, additional redundancy is provided for moving membranes from an out-of-service membrane train, by using the bridge crane, and installing into the operating train.

Table 6B.6 Membrane Filtration Design Criteria
Apple Valley WRP Design Information Memoranda
Victor Valley Wastewater Reclamation Authority, California

Parameter	Phase 1	Phase 2
Number of membrane trains	2	2
Number of membrane cassettes per train	3	5
Number of cassette spaces per train	5	5
Number of membrane modules per cassette (1)	42	42
Total membrane area, “n” condition, ft^2	85,680	142,800
Total membrane area, “n-1” condition, ft^2	42,840	71,400
Design membrane flux, “n” condition, gfd	11.7	14.0
Design Flow, “n” condition, mgd	1.0	2.0
Design Flow, “n-1” condition, mgd	0.5	1.0

Notes:
(1) Maximum number of modules per cassette is 48.

The proposed membrane basins layout is illustrated in Figure 6B.2. In addition, ancillary equipment associated with the MBR process includes blowers, air compressors, and chemical feed systems. The MBR process blowers distribute air into the MBR basins to provide air scouring of the membrane fibers, and assist with the treatment process. Air compressors provide air to operate pneumatic valves associated with the MBR process. The chemical feed systems associated with the MBR process include bulk (12.5 percent) sodium hypochlorite and citric acid to assist with cleaning the membrane fibers. A back pulse tank is also provided to serve as the water source for membrane back pulsing and cleaning operations. The ancillary equipment associated with the MBR process is located in areas adjacent to the MBR basins.

Flow Equalization

Flow equalization is required when the influent flow to the WRP exceeds the membrane production capacity (plant effluent). Because the Apple Valley WRP is being designed as a scalping plant, it is not expected that significant hydraulic peaks need to be dealt with at the plant. However, Carollo recommends adding flexibility to the design, in order to include some degree of flow equalization to equalize minor fluctuations in the flow, and also in case future design conditions change and the plant needs to operate as an “end-of-the-line” plant.

The proposed secondary system provides two locations for flow equalization. One of these locations is the feed-forward wet well, which can provide equalization volume that depends on the operating side water depth of the wet well. As a conservative approach, the side water depth of the feed-forward wet well is designed 2 feet below the side water depth in the biological treatment basins. Once this volume is used up, the water level rises, submerging the final weir of the biological treatment basins, making the water level in the feed-forward wet well and the water level in the biological treatment basins equal. Should equalization requirements increase in the future, the level in the wet well can be operated lower in order to increase the available equalization volume.

The biological process basins are designed with a total freeboard of 3 feet. Leaving a freeboard of approximately 1 feet at all times, the remaining 2 feet above the normal operating level can be used for equalization of peak flows.

To determine the system capability to equalize flows, a maximum water production from the MBR system needs to be determined. For the purposes of calculating equalization capabilities, the maximum allowable flux through the membranes was established at 20 gfd.

Table 6B.7 presents the design criteria as it relates to flow equalization within the proposed system. The most critical conditions for equalization occur when one biological process basin is out-of-service. The analysis presented herein does not consider MBR trains out-of-service (under such conditions, the plant flow is limited to 50 percent of the plant capacity). Under these conditions, the maximum peak flow (with a duration of 4 hours) that the system can equalize is 2.0 mgd (Phase 1) and 3.3 mgd (Phase 2) or a peaking factor of 2 and 1.65, respectively, with one aeration basin out-of-service.

Table 6B.7 Flow Equalization Analysis
Apple Valley WRP Design Information Memoranda
Victor Valley Wastewater Reclamation Authority, California

Parameter	Unit	Phase 1	Phase 2
Influent Average Flow	mgd	1.0	2.0
Maximum Influent Peak Flow (1)	mgd	2.0	3.3
Maximum Flux through MBR System	gfd	20.0	
Number of MBR Basins in Service	-	2	
MBR System Capacity (n-1)	mgd	1.71	2.86
Equalization Flow	mgd	0.29	0.44
Peak Flow Duration	hr	4.0	4.0
Equalization Volume (1)	gal	47,733	74,000
Number of Biological Treatment Basins in Service	-	1	2
Side Water Depth Used for Equalization (1)	ft	1.9	1.8
Total Available Freeboard	ft	3.0	3.0
Freeboard Below Top of Basin During Equalization	ft	1.1	1.2

Notes:
(1) Calculations assume that 2 feet of side water depth in the feed-forward wet well is available for flow equalization.

SUMMARY AND RECOMMENDATIONS

- Two biological treatment basins are recommended for Phase 1. One additional basin is recommended for Phase 2. Basins are sized to reliably treat the design flow under average constituent loadings with one basin out-of-service, and to treat maximum month loadings with all units in service. The maximum month load peaking factors for BOD, TSS, and TKN are 1.5, 1.5, and 1.3, respectively.
- Each basin contains anoxic and aerobic zones separated by baffles that promote serpentine flow. The last zone of each basin is designed as a “swing” zone with the ability to operate under anoxic or aerobic conditions. We recommend making provisions to readily install an internal mixed liquor return pump in Zone D of each basin, which will discharge into Zone A.
- A feed-forward configuration is recommended for the biological process / MBR system to improve process control and equalization. Mixed liquor will be pumped from the feed-forward wet well to the MBR basins. RAS flow back to the biological treatment basins is achieved via gravity. The recommended feed-forward pumping system is based on wet pit submersible pumps with variable speed control.
- The recommended MBR system configuration is based on two trains for Phases 1. At Phase 2, the water production capacity of the MBR system is increased by adding either two more cassettes in each MBR train (2 trains, 5 cassettes per train), or by adding one more train with one more cassette per train (3 trains, 4 cassettes per train). Membrane trains will be designed to hold 5 cassettes to allow either expansion option at Phase 2.
- Propeller-type submersible mixers are recommended for anoxic mixing.

- Fine bubble membrane disc aeration diffusers are recommended due to the higher transfer efficiency compared to coarse bubble diffuser systems. Positive displacement blowers are recommended for the aeration system, based on commonality with MBR blowers and lower capital cost.
- A downward-opening gate is recommended as part of the sludge wasting system, in order to achieve a positive mean to eliminate scum from the surface.

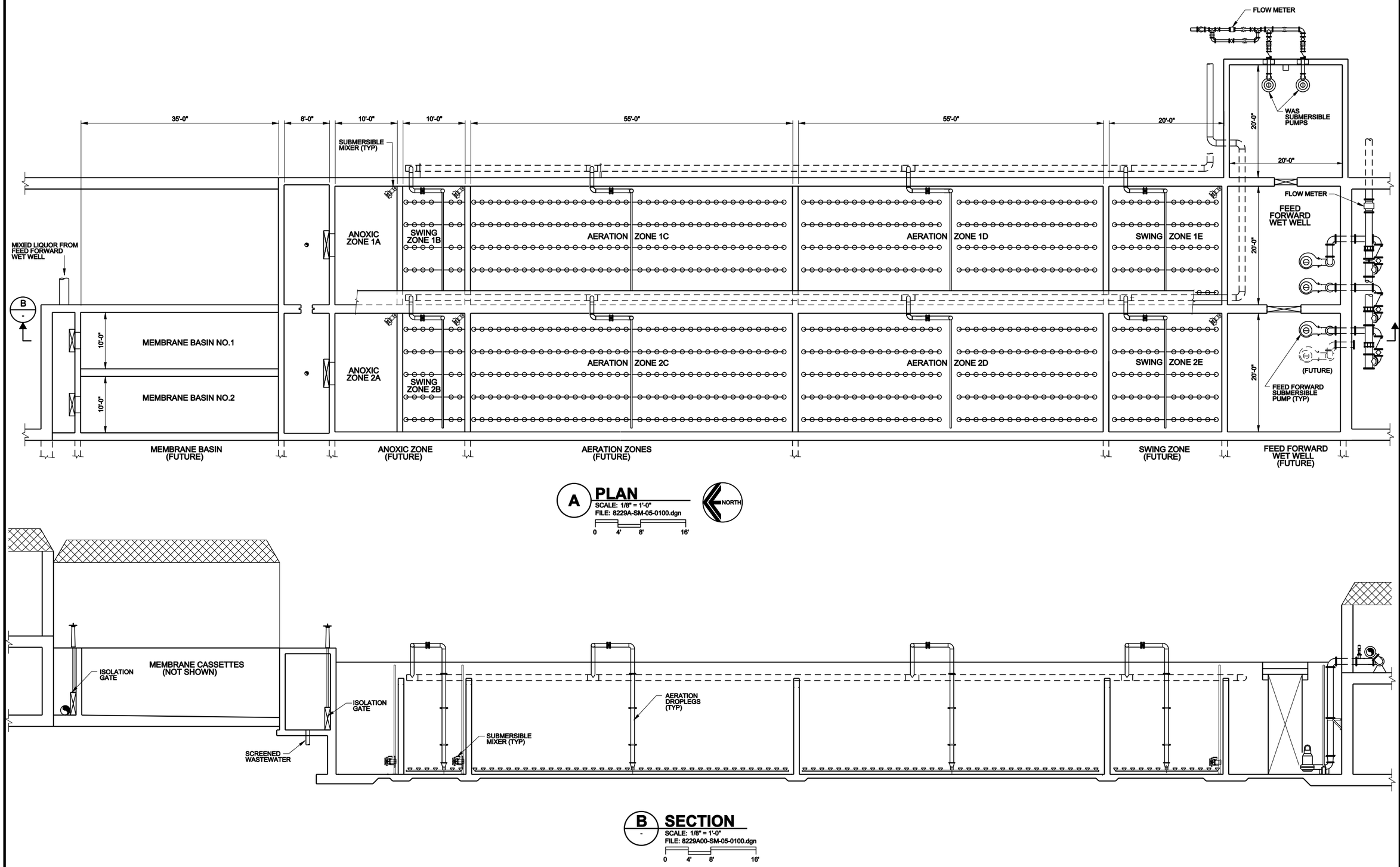

VICTOR VALLEY WASTEWATER RECLAMATION AUTHORITY
APPLE VALLEY WRP - PRELIMINARY DESIGN REPORT

HDR

carollo

AERATION/MEMBRANE FACILITIES - PLAN & SECTION

FIGURE 6B.1

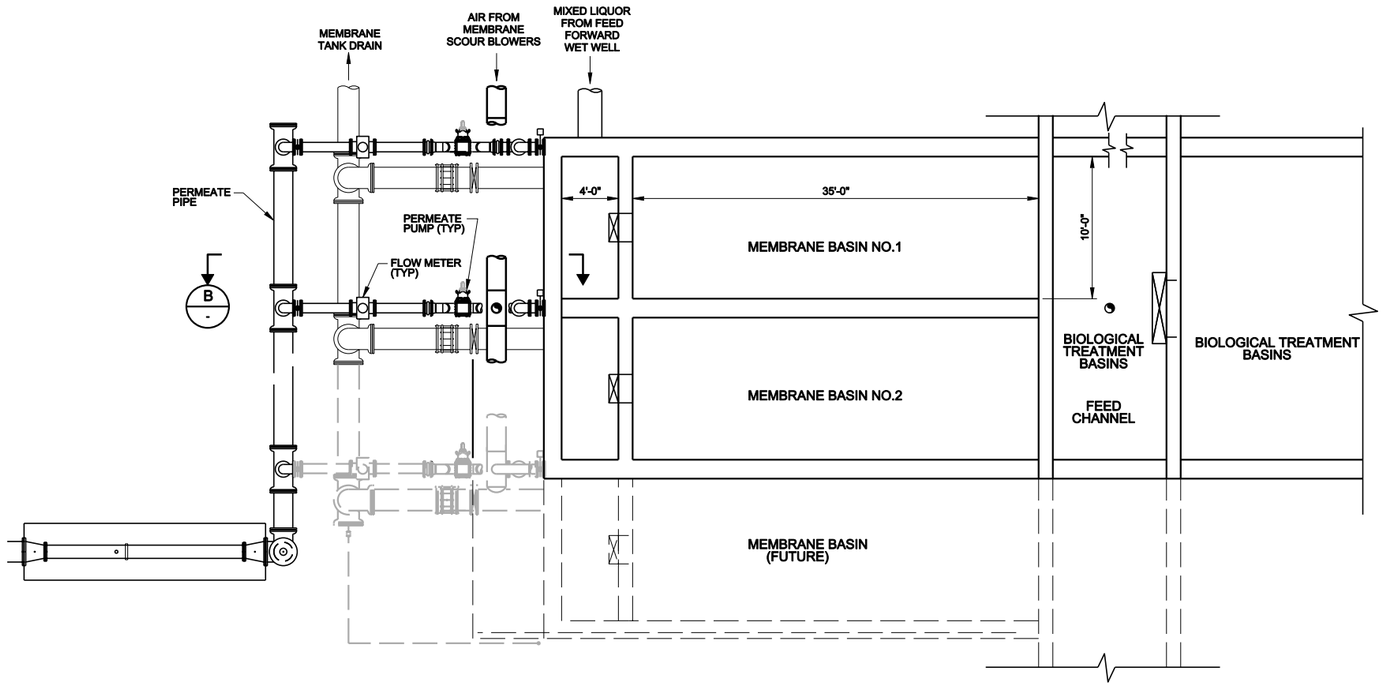

A PLAN
SCALE: 3/16" = 1'-0"
0 2' 4' 6' 12'

NORTH

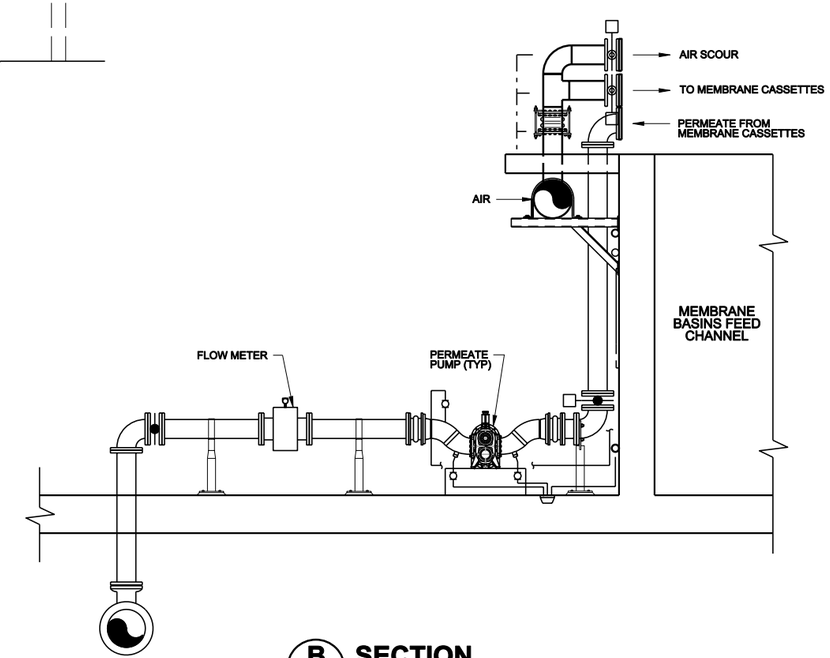

B SECTION
SCALE: 3/8" = 1'-0"
FILE: 8229A00-MS-05-101.dgn
0 2' 4' 6'

VICTOR VALLEY WASTEWATER RECLAMATION AUTHORITY
APPLE VALLEY WRP - PRELIMINARY DESIGN REPORT

HDR

carollo

MBR FACILITIES - PLAN & SECTION

FIGURE 6B.2

APPLE VALLEY WATER RECLAMATION PLANT

DESIGN INFORMATION MEMORANDUM NO. 7B

DISINFECTION

Project Name:	Hesperia and Apple Valley Scalping WRPs, Raw Sewage Lift Station and Force Mains		
Client:	Victor Valley Wastewater Reclamation Authority	**Date:**	December 2009

INTRODUCTION

The goal of the disinfection process is to significantly reduce or eliminate pathogenic microorganisms prior to discharging the treated effluent (reclaimed water). Multiple unit treatment processes may be used to achieve this requirement. As for the Apple Valley WRP, ultraviolet light (UV) disinfection was pre-selected by VVWRA, to be consistent with the Westside Water Reclamation Plant (WRP) disinfection process.

The level of disinfection at TOAV WRP is dictated by the desired end-use (reuse and recharge) of the reclaimed water. Effluent quality requirements and recommended effluent design criteria are discussed in detail in DIM-1B. The recommended reclaimed water disinfection design criteria is intended to meet the definition of "filtered wastewater" in California's Water Recycling Criteria, Title 22, Division 4, Chapter3.

PROCESS EQUIPMENT

UV disinfection uses UV light rays to inactivate pathogens in water. UV systems can be provided in open channel or closed-vessel configurations. Open channel UV systems flow by gravity through an open channel, which is often covered to discourage algal growth. Closed-vessel UV systems are pressurized vessels in which water must be pumped through the unit. At the Apple Valley WRP, a closed-vessel UV system would take advantage of the permeate pumps associated with the MBR system (to pump the water through the UV vessels) and would provide a more compact system orientation.

UV light can be produced by UV lamps of low-pressure (LP), medium-pressure (MP) or low-pressure/high-output (LP/HO). Low-pressure UV systems require a large number of low-wattage lamps. Medium pressure UV systems use high-wattage lamps and therefore require fewer lamps than low-pressure systems to achieve similar disinfection. Low pressure/high output UV systems require an intermediate number of lamps (i.e. between their low and medium pressure counterparts) and also have an intermediate UV output. Based on considerations of competitive bid, both LP/HO and MP UV system are suitable for installation at the Apple Valley WRP.

Based on preliminary discussions with Southern California Edison, they recommended using lower power equipment when practical; which will likely result in a final design recommendation to select LP/HO high output over MP UV reactors.

Using UV light for disinfection does not cause any disinfection byproduct (DBP) formation, requires no in-stream chemicals for primary disinfection, and eliminates on-site dechlorination requirements. UV disinfection also has the benefits of compact footprint, ease of upgradeability, future use in treating emerging contaminants, compatibility with MBR technology, and short treatment (i.e. exposure or contact time).

On the other hand, UV process has a relatively high electrical power consumption and can be used to achieve only primary disinfection. A secondary disinfection is typically required to maintain a disinfectant residual in reclaimed water storage and distribution systems.

PROCESS LAYOUT

Based on the recommended equipment, a preliminary closed-vessel UV disinfection configuration is presented in Figure 7B.1. The UV disinfection system at TOAV WRP will be installed in the lower level of the facility building at the west end of MBR basins.

SUMMARY AND RECOMMENDATIONS

In summary, the recommended disinfection system for the Apple Valley WRP include:

- The use of closed-vessel UV reactor.
- Low-pressure/high-output (LP/HO) or medium pressure (MP) UV lamps.
- NWRI (2003) requires designed UV dose of at least 80 mJ/cm^2 for water reuse disinfection downstream of membrane filtration. Based on Carollo's experience with UV validation testing, a UV design dose of 88 mJ/cm^2 is recommended to ensure the actual delivered UV dose in reclaimed water no lower than 80 mJ/cm^2.
- While UV light will be used to achieve primary disinfection of the WRP effluent, bulk sodium hypochlorite will be used for secondary disinfection to provide chlorine residual in reclaimed water storage and distribution system.

The recommended UV disinfection design criteria are listed in Table 7B.1 for the three UV manufacturers we evaluated.

Table 7B.1 UV Disinfection System Recommended Design Criteria
Apple Valley WRP Design Information Memoranda
Victor Valley Wastewater Reclamation Authority, California

Parameters	Phase 1 (1 mgd)	Phase 2 (2 mgd)
Design Maximum Flow, mgd	1.0	2.0
Maximum Total Suspended Solids, mg/L	5	
Type of UV Reactor	Closed-vessel	
Type of UV Lamp		
Wedeco LBX1000	Low-pressure/high-output	
Trojan UVFit - 32AL50	Low-pressure/high-output	
Aquionics Inline 4500+	Medium pressure	
Minimum UV Transmittance, %	65	
Design Dose, mJ/cm^2	88	
Number of UV Units		
Wedeco LBX1000	2 duty + 1 standby	3 duty + 1 standby
Trojan UVFit - 32AL50	2 duty + 1 standby	4 duty + 1 standby
Aquionics Inline 4500+	4 duty + 2 standby	8 duty + 2 standby

Table 7B.1 UV Disinfection System Recommended Design Criteria Apple Valley WRP Design Information Memoranda Victor Valley Wastewater Reclamation Authority, California	
Type of Cleaning	Automatic chemical/mechanical
End of Lamp Life	
Wedeco LBX1000	0.88
Trojan UVFit - 32AL50	0.90
Aquionics Inline 4500+	0.80
Lamp Fouling Factor	
Wedeco LBX1000	0.90
Trojan UVFit - 32AL50	0.80
Aquionics Inline 4500+	0.90

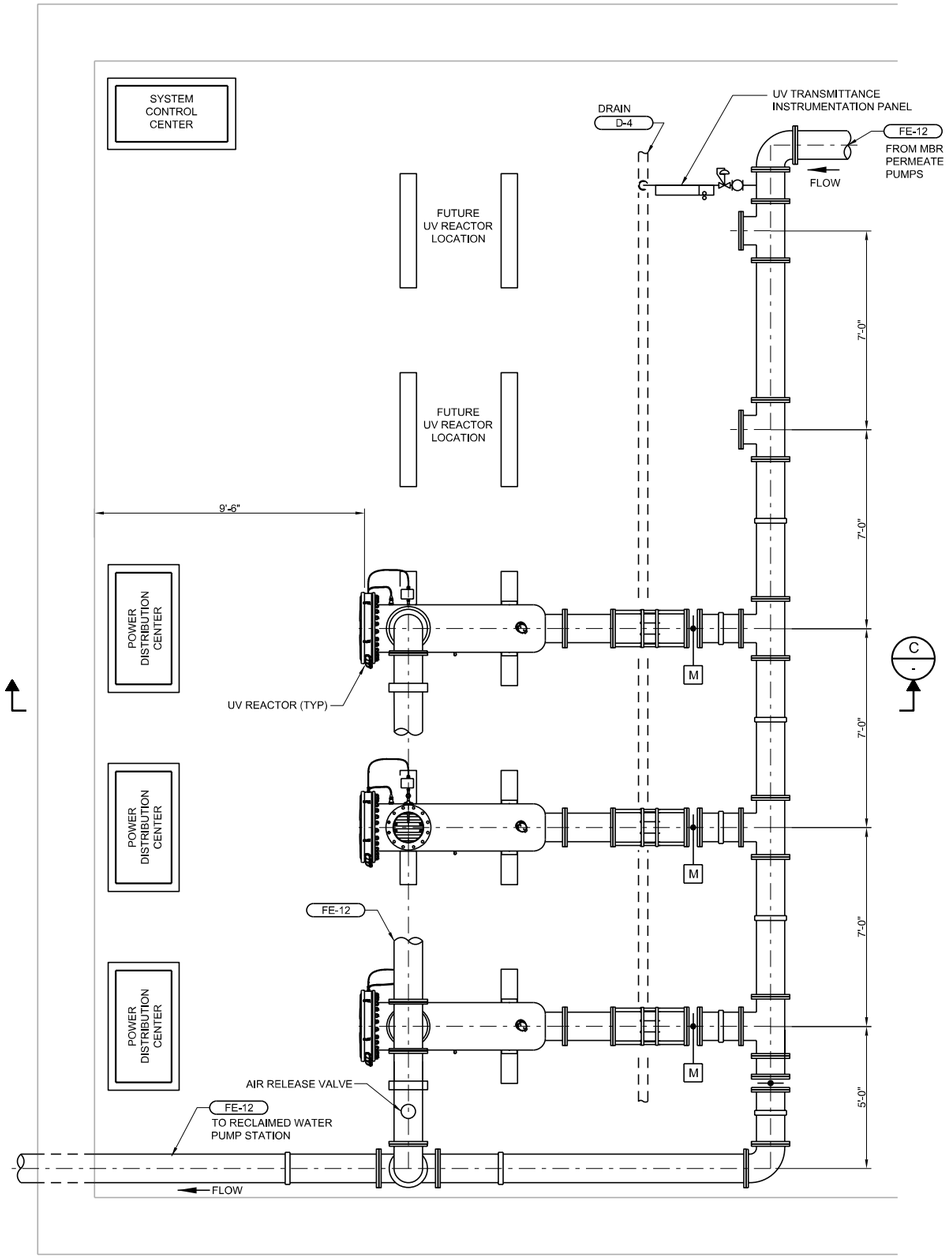

A PLAN
SCALE: 3/8" = 1'-0"
FILE: 7528B10-M-07-100
0 2' 4' 6'

NORTH

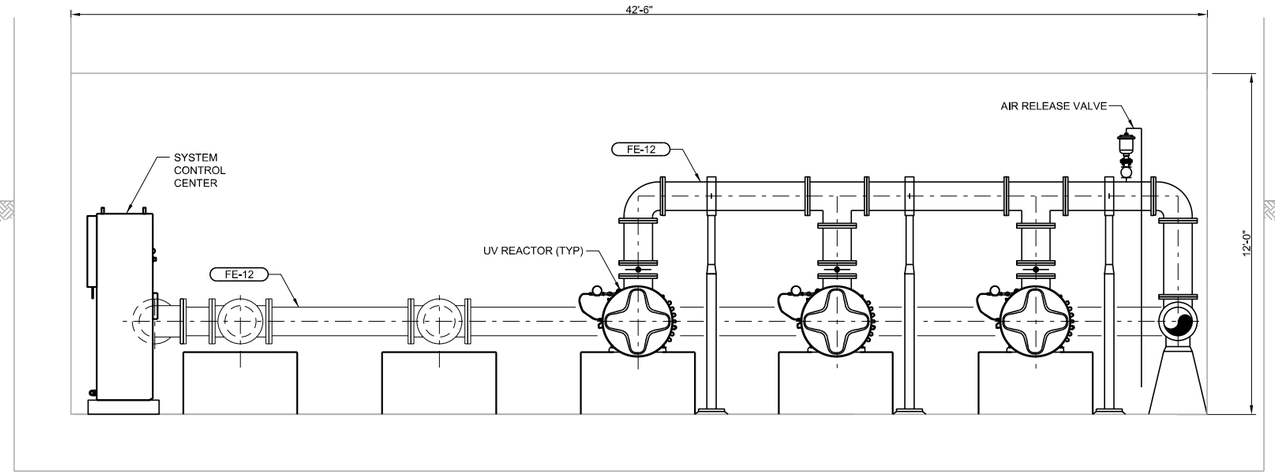

B SECTION
SCALE: 3/8" = 1'-0"
FILE: -
0 2' 4' 6'

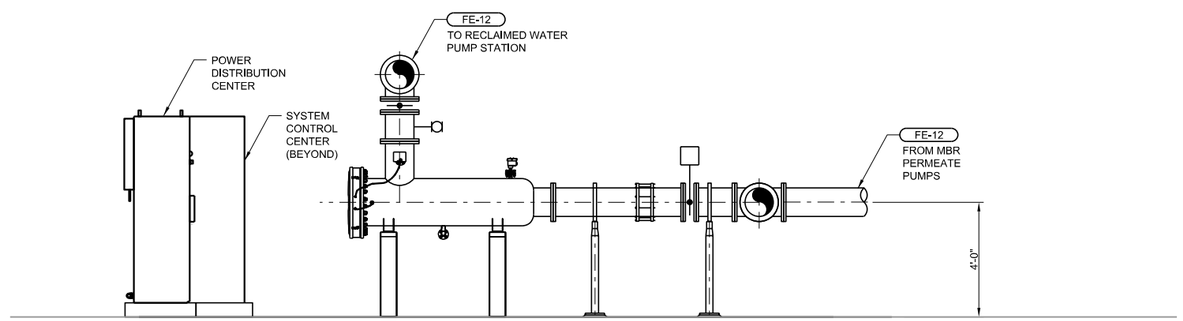

C SECTION
SCALE: 3/8" = 1'-0"
FILE: -
0 2' 4' 6'

VICTOR VALLEY WASTEWATER RECLAMATION AUTHORITY
APPLE VALLEY WRP - PRELIMINARY DESIGN REPORT

HDR

carollo

UV DISINFECTION SYSTEM - PLAN & SECTIONS

FIGURE 7B.1

DESIGN INFORMATION MEMORANDUM NO. 8B

RECLAIMED WATER PUMP STATION

Project Name:	Hesperia and Apple Valley Scalping WRPs, Raw Sewage Lift Station and Force Mains		
Client:	Victor Valley Wastewater Reclamation Authority	**Date:**	December 2009

INTRODUCTION

A reclaimed water pump station will be provided to convey the reclaimed water for off-site uses and on-site reclaimed water uses. The pump station will be situated after the UV disinfection system. The purpose of this DIM-8B is to summarize the proposed reclaimed water pump station requirements for the Apple Valley WRP.

PROCESS EQUIPMENT

The reclaimed water pump station will be comprised of a concrete clear well with vertical turbine pumps supplied with VFDs to provide pumping flexibility. Surge relief valves will be included on the reclaimed water force main that supplies off-site uses. The plant water system will include a hydropneumatic tank to maintain pressure in the system. Chlorine feed will be provided to the clear well to provide for residual chlorination of the reclaimed water.

Phase 1 will include two vertical turbine pumps capable of pumping 1.0 mgd each, thereby providing a 1+1 configuration. Phase 2 will include a third 1.0 mgd pump to provide a 2+1 configuration. The plant water supply will be fed by two vertical turbine pumps in a 1+1 configuration.

The sizing of the effluent pumps, horsepower and total dynamic head requirements, are contingent upon the final selection of reuse sites by the Town of Apple Valley.

A back pulse tank will be provided as part of the membrane system requirements. This tank will hold reclaimed water for use in back pulsing the membranes.

The preliminary layout and sections of the reclaimed water pump station are shown in Figure 8B.1.

CONTROL DESCRIPTION

The pump station will be operated based upon the water level in the clear well. Since the WRP is typically run with a constant influent feed (Phase 1 at 1 mgd) the pump station will also typically pump a consistent flow of approximately 1 mgd (minus plant water uses, evaporative loses, WAS discharge, etc.).

Plant water uses will be augmented by potable water for periods when the WRP production is not sufficient to meet the in plant water uses.

An ultrasonic water level sensor, high water level float, reclaimed water flowmeter, and potable water flowmeter will be provided at the pump station.

The recommended reclaimed water pump station design criteria are listed in Table 8B.1.

Table 8B.1 Reclaimed Water Pump Station Recommended Design Criteria Apple Valley WRP Design Information Memoranda Victor Valley Wastewater Reclamation Authority, California

Parameters	Phase 1 (1 mgd)	Phase 2 (2 mgd)
Type of Reclaimed Water Wet Well	Concrete clear well	
Type of Reclaimed Water Pump	Vertical turbine	
Pump Capacity, mgd, each	1	
Number of Reuse Water Pumps	1 duty + 1 standby	2 duty + 1 standby
Number of Plant Water Pumps	1 duty + 1 standby	

SUMMARY AND RECOMMENDATIONS

In summary, the recommended reclaimed water pump station for the Apple Valley WRP includes:

- Concrete clear well pump station.
- The use of vertical turbine pump for off-site reuse and on-site plant water system.
- Hydropneumatic tank to maintain plant water system pressure.
- Back pulse tank to store reclaimed water for membrane back pulsing.
- Chlorine feed to the clear well to provide residual chlorination of the reclaimed water.

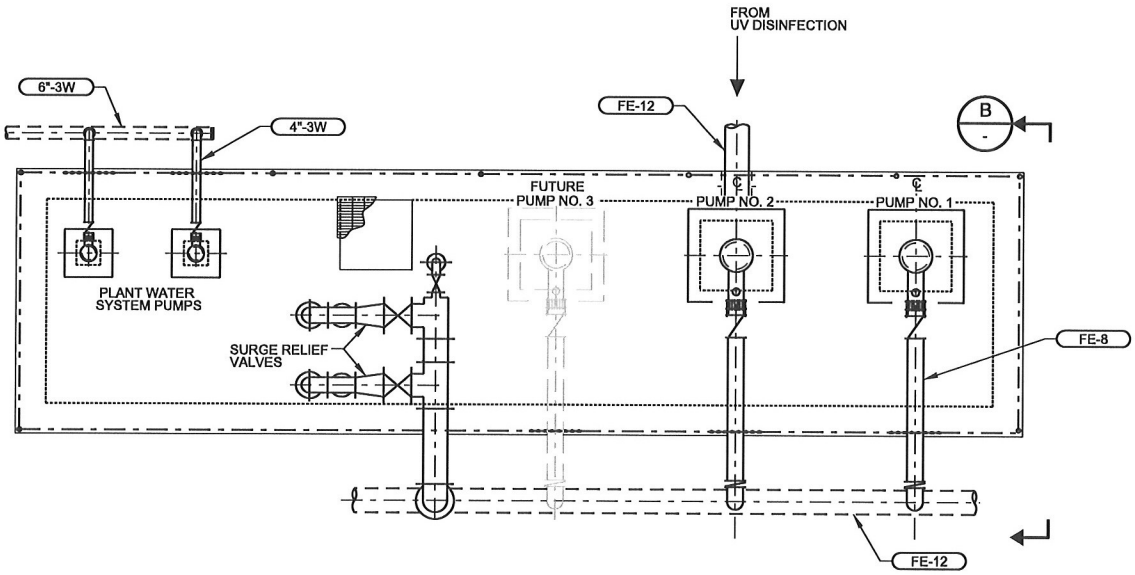

A PLAN
SCALE: 1/4" = 1'-0"
FILE: -

0 2' 4' 8'

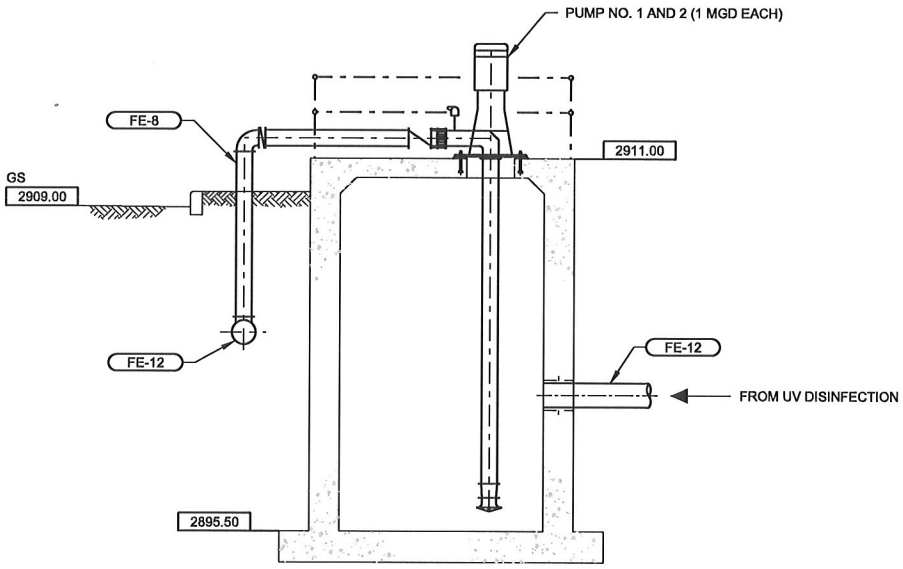

B - SECTION
SCALE: 1/4" = 1'-0"
FILE: -

0 2' 4' 8'

VICTOR VALLEY WASTEWATER RECLAMATION AUTHORITY
APPLE VALLEY WRP - PRELIMINARY DESIGN REPORT

HDR

carollo

RECLAIMED WATER PUMP STATION - PLAN & SECTION

FIG 8B.1

APPLE VALLEY WATER RECLAMATION PLANT

DESIGN INFORMATION MEMORANDUM NO. 9B

RESIDUALS HANDLING AND DISPOSAL

Project Name:	Hesperia and Apple Valley Scalping WRPs, Raw Sewage Lift Station and Force Mains		
Client:	Victor Valley Wastewater Reclamation Authority	**Date:**	December 2009

INTRODUCTION

The Apple Valley WRP will be designed to treat incoming wastewater, but it will not include facilities for treatment of the residuals solids generated at the WRP. Waste activated sludge will be generated at the WRP as part of the biological wastewater treatment process. The solids stream generated at the Apple Valley WRP will be sent to the Westside WRP for further treatment. The purpose of this DIM No. 9B is to summarize the residual handling and disposal requirements for the Apple Valley WRP.

PROCESS DESCRIPTION

Waste activated sludge (WAS) needs to be removed from the secondary process on a regular basis in order to maintain a target mixed liquor suspended solids (MLSS) concentration and a target solids retention time (SRT) in the biological treatment system. There are two optional locations from which WAS can be removed from the secondary treatment system. One option is to waste solids from the biological treatment basins, and a second option is to waste solids from the membrane basins.

The proposed location for solids wasting is at the feed-forward pump station located at the end of the biological treatment basins, upstream of the membrane basins. The main advantage of this location is that WAS and scum wasting can be achieved simultaneously. Removing scum that accumulates at the mixed liquor water surface is an important issue in the operation of MBR systems, where a surface wasting mechanism needs to be provided to selectively remove scum.

Wasted solids will be pumped to the interceptor that leaves Otoe Road Lift Station, joining the raw sewage flow beyond the Apple Valley WRP intake capacity (1.0 mgd at Phase I, 2.0 mgd at Phase 2), for treatment at the Westside WRP. The WAS discharge point in the interceptor will be downstream of the intake to the influent lift station to avoid solids recycling and accumulation in the treatment process.

PROCESS EQUIPMENT

The feed-forward wet well will be equipped with a downward-opening slide gate to remove floating scum and waste activated sludge (WAS) from the surface of the mixed liquor. In this manner, the scum and WAS will be simultaneously discharged to a WAS holding wet well.

Non-clog submersible centrifugal pumps will send the wasted sludge and scum from the holding wet well to the interceptor. The WAS and scum flow will be metered using a magnetic flowmeter.

The WAS pump station will be operated based upon the water level in the wet well. The pumps will be constant speed pumps. Periodically, the pumps will be run down (operator local control) to clean out the wet well. A hose bib will be provided near the wet well to allow operators to wash down any scum accumulation in the wet well. An ultrasonic water level sensor, low and high water level floats, and a WAS/Scum flow meter will be provided at the pump station.

Table 9B.1 summarizes the design criteria for the WAS and scum wasting system.

Table 9B.1 WAS and Scum Wasting Design Criteria
Apple Valley WRP Design Information Memoranda
Victor Valley Wastewater Reclamation Authority, California

Parameter	Phase 1 (1.0 mgd)	Phase 2 (2.0 mgd)
Daily Solids at Max. Month Loading, ppd	2,600	5,600
Daily Solids at Avg. Day Loading, ppd	1,600	3,400
Design WAS Solids Concentration, mg/L	8,000	
Daily Flow at Max. Month Loading, gpd	38,970	83,930
Daily Flow at Avg. Day Loading, gpd	23,980	50,960
WAS/Scum Pump Design Flow, gpm	250	250
Pump Operating Schedule		
Days per week	5	5
Hours per day at Max. Month Loading	3.6	7.8
Hours per day at Avg. Day Loading	2.2	4.8
Pump Type	Non-clog Centrifugal Submersible, Wet Pit	
Pump Motor Control	Constant Speed	
Number of Pumps (Duty + Standby)	1 + 1	1 + 1
Firm Capacity, gpm	250	330250
Total Capacity, gpm	500	500
WAS Flowmeter Type	Magnetic	

SUMMARY AND RECOMMENDATIONS

WAS will be pumped from the Apple Valley WRP into the existing Otoe Road Lift Station force main to allow conveyance to the downstream portion of the collection and ultimate treatment at the Westside WRP. The WAS holding wet well will be common-walled with the feed forward pump station to allow for surface wasting of WAS and scum. The wet well will consist of two submersible pumps in a 1+1 configuration.

DESIGN INFORMATION MEMORANDUM NO. 10B

SITE AESTHETICS

Project Name:	Hesperia and Apple Valley Scalping WRPs, Raw Sewage Lift Station and Force Mains		
Client:	Victor Valley Wastewater Reclamation Authority	**Date:**	December 2009

INTRODUCTION

The Apple Valley WRP will be located adjacent to the existing Brewster Park and as such will be constructed to reduce aesthetics impacts. This DIM-10B focuses on the site aesthetics for the Apple Valley WRP.

ARCHITECTURAL CONCEPT

The selected building façades provide an urban gesture that is respective and friendly to the community. The tones and movements are subtle as the California desert. The split face block incorporates accent block and two tones respective to a native palette. The buildings interact with the horizon with the use of sloped roofs and variation of building heights. The roof incorporates dormers to add natural light into the interior spaces and to break the large span of the roof. Natural and ambient day lighting will be incorporated where possible and practical. The architectural variations are integrated structurally into these facilities to maintain integrity. The site will be buffered with a native landscape incorporating the use of small berms and the site fence will be varied with pilasters where appropriate. This perimeter screening will reduce the line of site of the WRP and increase the overall aesthetic acceptability of the project. Preliminary elevations are provided in Figure 10B.1.

Summary of Architectural Concept

- Roof: Non-metallic roof (concrete roof tiles or clay tile)
- Façade: CMU split face
- Site fencing: Wrought iron pole style with curved tops
- Screening: Small berms and landscaping where appropriate
- Codes: Town of Apple Valley Development Code 2000, Chapter 9.47 Industrial Design Standards

NOISE ABATEMENT

The major equipment that produce noise are pumps and blowers. The process and membrane air scour blowers will be located inside a building with noise attenuation panels. The potential to enclose the blowers in a noise enclosure within the building will be explored to reduce the impact to operational personnel to the noise.

Motors not located within buildings will be further evaluated during the design phase to determine the appropriate speed to reduce noise potential.

LANDSCAPING AND SITE SCREENING

The site will be buffered with a native landscape incorporating the use of small berms and the site fence will be varied with pilasters where appropriate. This perimeter screening will reduce the line of site of the WRP and increase the overall aesthetic acceptability of the project.

SITE SECURITY

The perimeter fence will maintain security along the boundary of the facility. A gate with keycard and fire department access will be included. Other security features, such as cameras and alarms, are discussed in DIM 12B.

A FRONT ELEVATION
VIEW FROM PARK

B REAR ELEVATION
VIEW FROM STREET

VICTOR VALLEY WASTEWATER RECLAMATION AUTHORITY
APPLE VALLEY WRP - PRELIMINARY DESIGN REPORT

HDR

carollo

CONCEPTUAL ARCHITECTURAL ELEVATIONS

FIGURE 10B.1

DESIGN INFORMATION MEMORANDUM NO. 11B
ELECTRICAL POWER AND DISTRIBUTION

Project Name:	Hesperia and Apple Valley Scalping WRPs, Raw Sewage Pump Station and Force Mains		
Client:	Victor Valley Wastewater Reclamation Authority	**Date:**	December 2009

INTRODUCTION

The purpose of this Design Information Memorandum (DIM) No. 11B is to describe the preliminary basis of design for the electrical equipment for the Apple Valley Water Reclamation Plant (WRP).

ELECTRICAL DESIGN LOADS

Table 11B.1 summarizes the anticipated new plant loads and the planned capacity at each electrical feed.

Table 11B.1 Electrical Loads
Apple Valley WRP Design Information Memoranda
Victor Valley Wastewater Reclamation Authority, California

Item	Connected Load	Demand Load	MCC/MSB
Main Switchgear	1266A	1266A	MSB (1600A) bus
MCC	785	785	MCC (1000A) bus

ELECTRICAL SYSTEM

Electrical Design Criteria

Site Power

480 VAC power to the site will be provided by an underground feed from Southern California Edison (SCE).

Main Switch Board (MSB) / Motor Control Center (MCC)

The MSB/MCC will be installed in an electrical room. The design will be based on 2008 National Electrical Code (NEC). The details are as follows:

- The MSB will be rated: 277/480 volt, 3-phase, 3-wire, 60K amps, interrupting and have a standby generator system dedicated to it. The generator will be switched to the system with an Automatic Transfer Switch (ATS). The switch will be interlocked with the Utility power feed so that the ATS will not switch back until Utility power is restored.
- The MCC will be rated: 277/480 volt, 3-phase, 3-wire, 60K amps.
- The MCC will be sub-fed from the MSB.

- MSB / MCC construction: NEMA 1 Gasketed, 21" Depth, Tin plated copper buses.
- Lighting panels will be served by dry transformers, will be wall-mounted and grounded per NEC 250 for separately derived system.

Motor Control

- Fixed speed motors up to 40 hp: Across the line starters.
- Fixed speed motors over 40 hp: Reduced voltage soft starter (RVSS).
- Variable frequency drives (VFDs) will be used where variable speed control is needed. VFD Criteria: for motors 75 hp and above, 18-pulse. For motors less than 75 hp, 6 pulse with input and output reactors.

Conduit

- Dry areas: Galvanized rigid steel.
- Outdoors, wet areas and corrosive areas: PVC-coated galvanized rigid steel.
- Underground ducts: PVC schedule 40 encased in red slurry.

Wire

- Power; Thermoplastic type THHN/THWN.
- Instrument; Twisted shielded pair, 600 volt, Type TC; 16 gauge minimum.
- Data Cables; as required.

Lighting

- Indoor Areas: Fluorescent, electronic ballast, T8 lamp. Lighting levels appropriate for each occupancy or process area.
- Outdoor lighting for safety and process access. High Intensity Discharge (HID) Metal Halide lamp.

Standby Generator

A standby generator and Automatic Transfer Switch (ATS) will be installed to provide automatic standby power for the Apple Valley WRP.

Design Criteria

- Voltage: To match utility power, 277/480 volt, 3 phase, 3 wire, 60 Hz.
- Fuel: Diesel.
- Capacity: The standby generator will be capable of serving the Apple Valley WRP maximum demand; 350 kW.
- Location: Apple Valley WRP exterior.
- Day tank sized for 8-hour runtime.
- Sound attenuating outdoor enclosure.
- Critical exhaust silencer.

Equipment Description

The standby generator will be a diesel-fueled, concrete-pad mounted type with an external diesel fuel storage tank. Fuel capacity will be sized for 8 hours of operation at normal load. The generator will be connected to the Apple Valley WRP MCC through an ATS. When in automatic mode, the ATS will sense a utility power failure, start the standby generator, transfer load to the generator, and then will return the load to the utility service when utility power has become available and is stable. The ATS also provides automatic exercise programming for the generator.

Construction Materials

The standby generator will be specified with the necessary components needed for the application, such as an external fuel tank, a critical grade exhaust silencer, outdoor sound attenuated enclosure, and a block heater. Equipment will be standard manufacturer's models. The unit will meet all applicable local emissions requirements, including those for particulate emissions. The standby generator will be installed on a mass concrete pad outdoors.

Control Description

The standby generator will be controlled by a solid state configurable controller in the ATS. There will be a number of configurable points, but the major points are four time delays as follows:

- Time delay to start generator after loss of Utility power, typically 30 seconds.
- Time delay to transfer load to generator, typically 30 seconds.
- Time delay to transfer back to Utility, typically 15 minutes.
- Time delay to stop generator for cool down, typically five minutes.

In addition, it will be possible to configure various exercise and test options for the standby generator such as weekly, bi-weekly, or monthly start-and-run with or without load transfer.

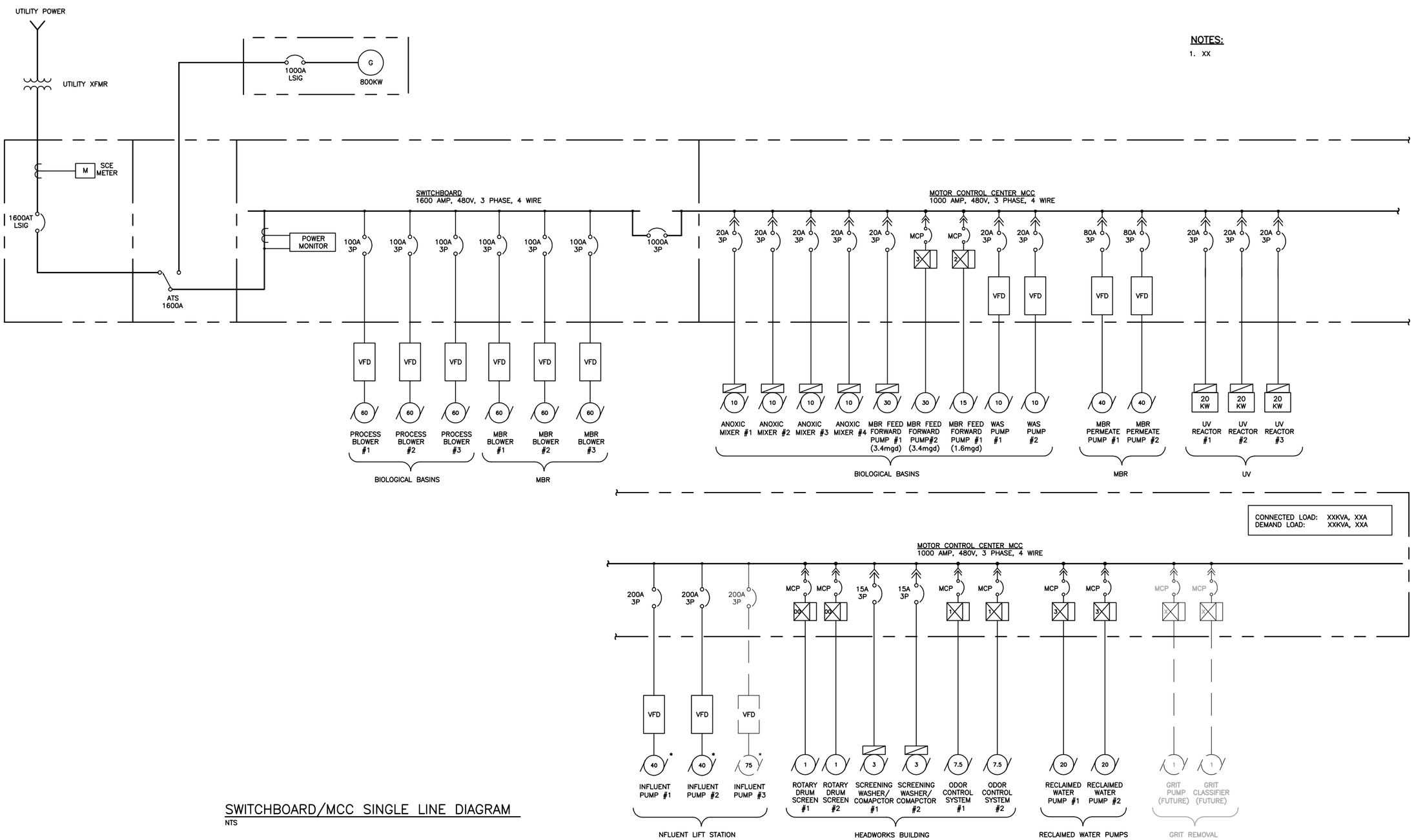

NOTES:

1. XX

SWITCHBOARD/MCC SINGLE LINE DIAGRAM

NTS

VICTOR VALLEY WASTEWATER RECLAMATION AUTHORITY
APPLE VALLEY WRP - PRELIMINARY DESIGN REPORT

HDR

carollo

APPLE VALLEY WRP - SINGLE LINE

FIG.11B-E001

NOTES:

1. XX

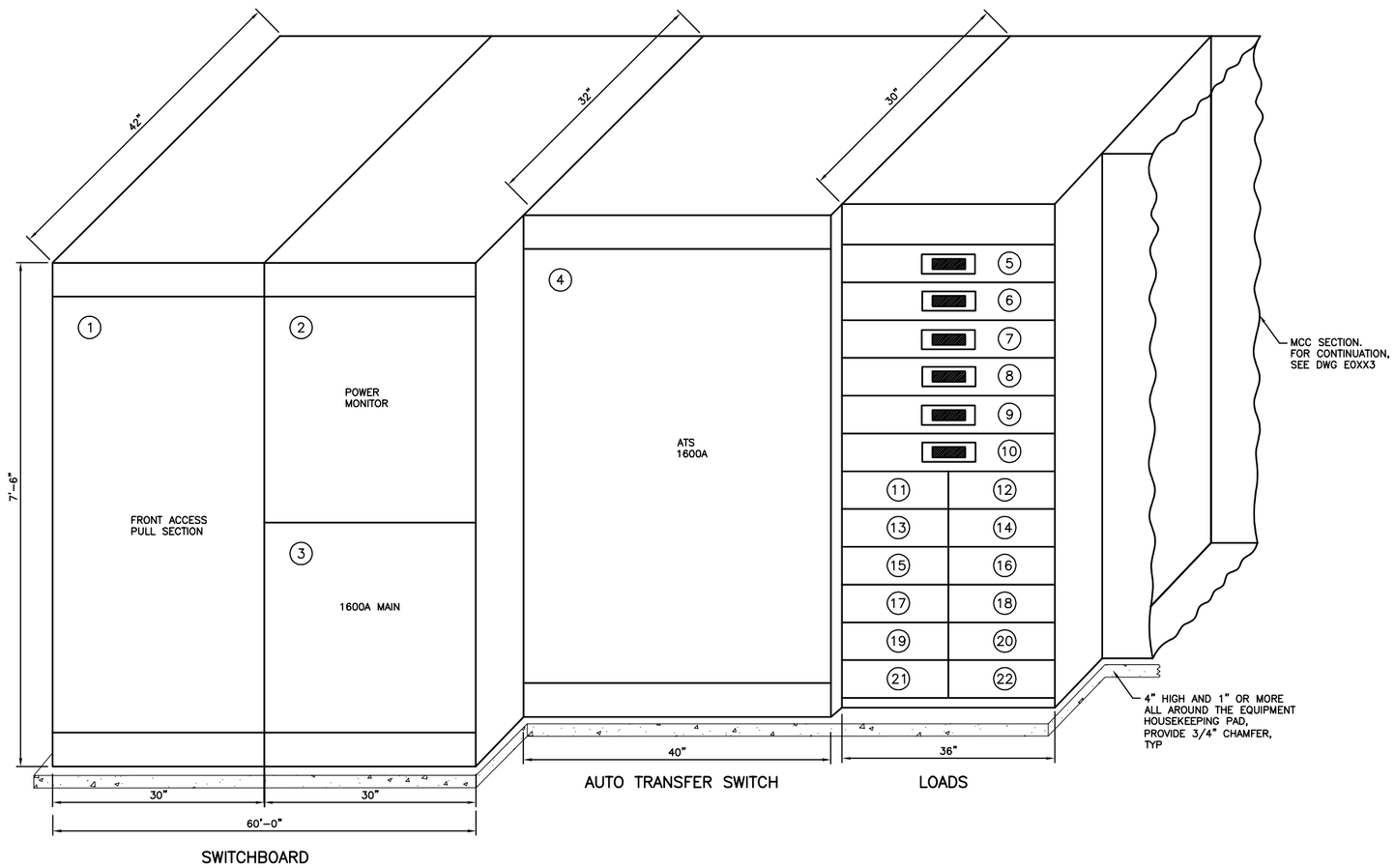

SWITCHBOARD ELEVATION

NTS

SWITCBOARD		
ITEM	DESCRIPTION	REMARK
1	PULL SECTION	
2	POWER MONITOR	50A, 3P BREAKER
3	MAIN BREAKER	1600A, 3P BREAKER
4	AUO TRANSFER SWITCH (ATS)	1600 AMP RATIMG
5	PROCESS BLOWER #1	VFD
6	PROCESS BLOWER #2	VFD
7	PROCESS BLOWER #3	VFD
8	MBR BLOWER #1	VFD
9	MBR BLOWER #2	VFD
10	MBR BLOWER #3	VFD
11	SPACE	
12	SPACE	
13	SPACE	
14	SPACE	
15	SPACE	
16	SPACE	
17	SPACE	
13	SPACE	
14	SPACE	
15	SPACE	
16	SPACE	
17	SPACE	

VICTOR VALLEY WASTEWATER RECLAMATION AUTHORITY
APPLE VALLEY WRP - PRELIMINARY DESIGN REPORT

HDR

carollo

APPLE VALLEY WRP - SWITCHGEAR ELEVATION

FIG.11B-E002

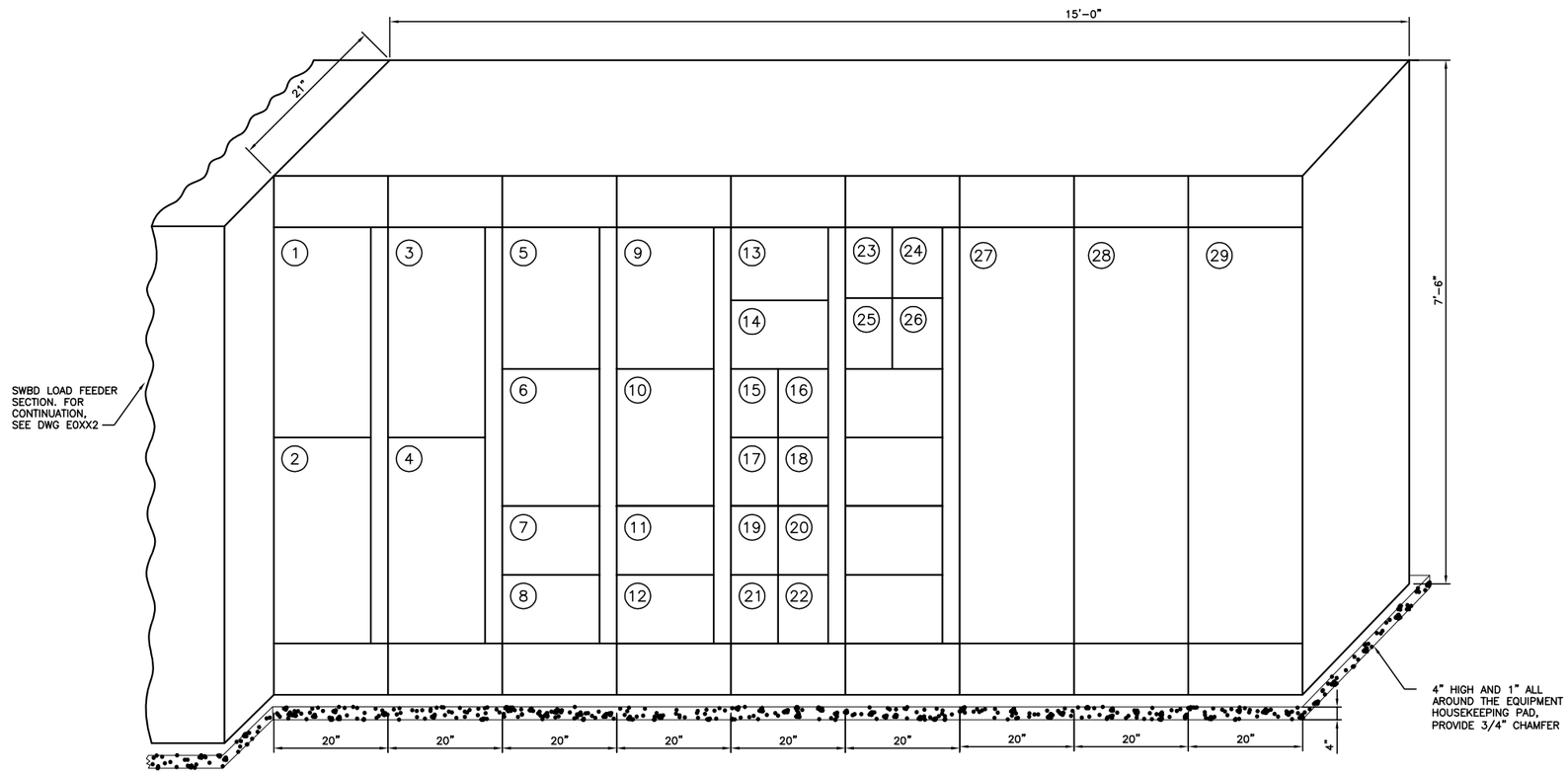

MCC ELEVATION
NTS

NOTES:
1. XX

MCC		
ITEM	DESCRIPTION	REMARK
1	WAS PUMP #1	VFD
2	WAS PUMP #2	VFD
3	MBR PERMEATE PUMP #1	VFD
4	MBR PERMEATE PUMP #2	VFD
5	MBR FEED FORWARD PUMP #1	SIZE 3 STARTER (3.4 mgd)
6	MBR FEED FORWARD PUMP #2	SIZE 3 STARTER (3.4 mgd)
7	MBR FEED FORWARD PUMP #1	SIZE 2 STARTER (1.6 mgd)
8	SPACE	
9	RECLAIMED WATER PUMP #1	SIZE 3 STARTER
10	RECLAIMED WATER PUMP #2	SIZE 3 STARTER
11	ODOR CONTROL SYSTEM #1	SIZE 1 STARTER
12	ODOR CONTROL SYSTEM #12	SIZE 1 STARTER
13	ROTARY DRUM SCREEN #1	SIZE 00 STARTER
14	ROTARY DRUM SCREEN #2	SIZE 00 STARTER
15	SCREENING WASHER/COMPACTOR #1	15A, 3P BREAKER
16	SCREENING WASHER/COMPACTOR #2	15A, 3P BREAKER
17	ANOXIC MIXER #1	20A, 3P BREAKER
18	ANOXIC MIXER #2	20A, 3P BREAKER
19	ANOXIC MIXER #3	20A, 3P BREAKER
20	ANOXIC MIXER #4	20A, 3P BREAKER
21	UV REACTOR #1	20A, 3P BREAKER
22	UV REACTOR #2	20A, 3P BREAKER
23	UV REACTOR #3	20A, 3P BREAKER
24	SPACE	
25	GRIT PUMP (FUTURE)	SIZE XX STARTER
26	GRIT CLASSIFIER (FUTURE)	SIZE XX STARTER
27	LIFT STATION PUMP #1	VFD
28	LIFT STATION PUMP #2	VFD
29	LIFT STATION PUMP #3	VFD

VICTOR VALLEY WASTEWATER RECLAMATION AUTHORITY
APPLE VALLEY WRP - PRELIMINARY DESIGN REPORT

HDR

carollo

APPLE VALLEY WRP - MCC ELEVATION

FIG.11B-E003

APPLE VALLEY WATER RECLAMATION PLANT

DESIGN INFORMATION MEMORANDUM NO. 12B

INSTRUMENTATION AND CONTROLS

Project Name:	Hesperia and Apple Valley Scalping WRPs, Raw Sewage Pump Station and Force Mains		
Client:	Victor Valley Wastewater Reclamation Authority	**Date:**	December 2009

INTRODUCTION

The purpose of this Design Information Memorandum (DIM) No. 12B is to describe the preliminary instrumentation and controls (I&C) basis of design for the Apple Valley Water Reclamation Plant (WRP).

INSTRUMENTATION AND CONTROLS (I&C) BASIS OF DESIGN

System Overview

The VVWRA employs a combination of Allen Bradley PLC 5/20E and SLC500 series Programmable Logic Controllers (PLCs) to monitor and control their Westside WRP. The PLCs communicate using Ethernet over a fiber optic backbone. A similar strategy is proposed for the Apple Valley WRP.

Within a proposed control room, the operators will interface with the system using the Wonderware Human Machine Interface (HMI). At key locations in the plant, an Industrial Personal Computer (IPC) will be loaded with the Wonderware screens, and would also serve as remote HMIs.

Instrumentation and Control

Purpose and Intent

The instrumentation and control (I&C) system will be designed to monitor and control the Apple Valley WRP.

Design Criteria

- The PLC that will be used to monitor and control the Apple Valley WRP various systems will be the Allen Bradley (AB) PLC Model 5/20 E. VVWRA has standardized around this model PLC for all remote stations and in-plant controls. In addition, the existing Westside WRP operators and Information Technology (IT) staff have been trained in the maintenance, operation, and programming of the AB PLC 5/20E. Finally, the VVWRA keeps PLC 5/20 E spare Central Processing Units (CPUs) and input and output modules, both analog and digital. The software that will be used to program the AB PLC 5/20 E will be the RS LOGIX 5.
  - Allen Bradley 1771-A4B, 16-slot chassis

  - Allen Bradley 1785-L20B, PLC 5/20E controller, 16k RAM, supporting TCP/IP Ethernet communications
  - Allen Bradley 1771-IL, Analog Input Module, 8 Isolated Inputs, 4-20 mA
  - Allen Bradley 177-OFE2, Analog Output Module, 4 / 4-20 mA Outputs
  - Allen Bradley 1771-IA16, 16 channel AC Input Module
  - Allen Bradley 1771-OAD, 16 channel AC Output Module
  - Allen Bradley 1771-P7, Power Supply, Rack Mount, 2.88 A @ 24 VDC
- The HMI will provide the operator with the ability to monitor and control local processes at the field PLCs using the Allen Bradley Panelview Plus 1000s. Similar to the AB PLC 5/20 E, the VVWRA has standardized around this model of local HMI and use them in conjunction with the AB PLC 5/20 E at the field PLC cabinets. The operations and IT staff own a copy of RS View, the Panelview software tool, and can program and configure the Panelview.
  - Allen Bradley 2711-K10C4B2 Panel View 1000+, Ethernet and RS 232(DH-485), Communication & RS-232 port
- The HMI providing supervisory control and data acquisition (SCADA) of the entire treatment plant processes will be Wonderware. VVWRA staff is already trained in the programming and configuration of the Wonderware System. VVWRA need only to purchase additional client licenses to expand their system for the Apple Valley WRP.
- The PLCs will communicate with the central control room using Ethernet protocol over fiber. Typically, the PLC and local HMI will connect to an Ethernet switch. A 10/100 MBPS Ethernet to fiber optic converter will also connect to the switch and allows the PLC to be placed on the network.
  - Ethernet to Fiber Optic Converter: (N-TRON 509FX)
  - Ethernet Switch: HP Procurve 1700-8
- The design will include the following instruments (and proposed manufacturer):
  - Electromagnetic flowmeters: Sparling, Siemens.
  - Thermal mass flowmeters: FCI with Vortab
  - Pressure indicating transmitters: Rosemount, Siemens
  - Gauges, and non-mercury filled switches: Dwyer
  - Ultrasonic level indicating transmitters: Siemens (Milltronics Hydroranger)
  - Hydrostatic level indicating transmitters: KPSI, Rosemount, Siemens
  - Non-Mercury filled level switches
  - Water quality analyzers including pH, turbidity, conductivity, chlorine residual, and dissolved oxygen: HACH
  - Samplers: HACH

Preliminary Control Strategies

Influent Pump Station

The existing adjacent Otoe Road lift station will pump raw wastewater to the screening facility. Pump operation will be automatic based on level sensors and level switches provided in the pump station wet well. A flowmeter will measure the pump station discharge to the screening facility.

Screening

Operation of fine screens will be automatic, based on the water level differential across the screen. The water level upstream and downstream of the screens will be determined by two ultrasonic level sensors. When head loss across the screen reaches an operator-selected level, the screen will start a cleaning cycle, and the cleaning will continue until the levels equalize. Alternatively, the screens may be activated with operator-defined timers.

Screenings from the fine screens will be discharged to the screenings washer/compactor. Operation of each washer/compactor is tied to operation of the corresponding screens. The screenings washer/compactor and wash water valve will start/open on a signal from the screen. The washer/compactor will continue to operate for an adjustable period of time after the screen cleaning cycle is complete.

Aeration Basins

Centrifugal blowers will supply process air to the aeration basins. The blower operation will be automatically controlled based on operator selection of either DO control or air rate flow to the aeration tanks.

The Membrane Bioreactors (MBR) Feed Pump Station will pump mixed liquor to the MBR basins. Operation of the pumps will be automatic based on level sensors and level switches provided in the pump station wet well provided a permissive system ready signal is received from MBR system control. A flowmeter on common pump discharge header pipe will monitor flow rate and the signal will be used to control operation of the MBR system.

Membrane Bioreactors

All valves and control devices of the MBR will be interlocked through the MBR system PLC to allow smooth and continuous automatic operation. Valves will open, close and/or modulate, depending on signals from the PLC. These signals will be predetermined through PLC programming and allow the system to operate at optimal conditions. Variable speed pumps will also be controlled by the PLC and vary their vacuum/flow output based on signals from the PLC.

All operating parameters will be continuously monitored by the PLC. If an alarm or emergency condition occurs, the PLC signal will instruct the various components to change operation conditions and/or shut down the system and alert the operator for attention of the problem. In the event of an alarm condition that is detrimental to the equipment, PLC will have ability to shut down either one train or the whole system.

The modes of operation for the MBR system are as follows: off, production, relax, backpulse, standby, sludge wasting, maintenance clean, recovery clean, and manual. Other than the off and the manual mode, all modes of operation will be automatically controlled based on the PLC programming and operator input. Operation of the various automatic modes of the MBR system is described below.

- *Production*
  The MBR system will treat mixed liquor based on a dynamic hydraulic reference level in the system. As the MBR tank level increases indicating increase in plant flow, the permeate pump speeds up automatically and vice versa. Trans-membrane pressure (TMP) across the membrane will be monitored and initiate membrane cleaning cycle when the TMP value exceeds a preset value. Air scouring through coarse bubble diffusers will keep the membrane clean and its operation will be controlled by the PLC.

- *Relax*
  In relax mode, the PLC will stop permeating and the membrane will be relaxed for predetermined time set by the operator. Operator will select relax frequency and duration.
- *Backpulse*
  If required, treated water can be periodically reversed back through the membranes using the permeate pumps to keep the membranes clean. The PLC will control all stages of this operation automatically based on PLC program and operator input. Operator will select backpulse frequency, duration, set flow rate, and TMP.
- *Standby*
  Several triggers such as low MBR tank level, low permeate demand, etc. may cause a train to go to standby mode rather than shutting it down. PLC program automatically switch between production mode and standby mode.
- *Sludge Wasting*
  To achieve desired solids retention time (SRT), sludge from the MBR tanks will be wasted periodically. Operator will set duration, frequency and flow of sludge.
- *Maintenance and Recovery Cleaning*
  Membrane cleaning will be fully automated and controlled by the PLC program. In addition to maintenance cleaning and recovery cleaning when the membrane stops production and uses chemicals for cleaning, continuous air scouring during production and relaxation will also keep the membranes clean.

UV Disinfection System

Permeate from membrane bioreactor (MBR effluent) will enter three UV disinfection reactors designed to work in parallel. A flow control valve and a flowmeter on each UV reactor inlet pipe will control permeate flow to the reactor. Depending on the permeate flow rate at any time, UV system PLC will allow permeate to enter one or more UV reactors.

The UV disinfection system operation will be automatically controlled by the UV system PLC to achieve a specific level of disinfection in the MBR effluent. In addition, based on operator selection, the system can be operated in manual or off mode. The three modes of operation are described below.

- *Automatic Mode*
  The UV system PLC will control the operation of all UV reactors by ensuring that the expected disinfection level is met. To achieve the expected disinfection level, the following parameters will be taken into account:
  - Actual flow to each UV reactor will come from the flowmeter installed on MBR permeate influent pipe to the UV reactor.
  - Target UV dose will be defined during the design stage as a preset value which is field adjustable, typically 15 percent above the required or minimum dose.
  - The UV PLC calculates the current UV dose and adjusts the number of UV reactors in operation as well as varying the lamp power to keep the current UV dose higher than or equal to the target UV dose. The average UV intensity will be measured by a UV intensity sensor. This signal will be used by the UV system control to “dose pace” in order to optimize energy consumption and achieve a specific level of disinfection.

- *Manual Mode*
  - The UV system reactors can be turned ON and OFF independent of the PLC. Each reactor will have a manual override to allow the operator to individually turn each reactor ON or OFF. When the reactor is on via manual mode, the lamp power will always be 100 percent.
- *Off Mode*
  - In the off mode, the UV reactor lamps are off. However, the lamp cleaning wiper sequence continues to operate in order to keep the quartz sleeves clean. In the off mode, MBR effluent will not be permitted to flow through the UV reactors as the effluent will exit the reactor without disinfection.

Reclaimed Water Pump Station

Reclaimed water pump station will pump reclaimed water to the proposed reclaimed (recycled) water distribution system and/or effluent disposal sites. Variable speed pumps will operate automatically based on level sensors and level switches provided in the pump station wet well. A flowmeter on the common pump discharge header will measure the pump station discharge to the reclaimed water system.

Other Miscellaneous Treatment Processes

The final design will likely include provisions to add sodium hypochlorite addition to maintain chlorine residual in the recycled water distribution system.

Instrumentation and Process Diagrams

Preliminary process and instrumentation diagrams are included at the end of this DIM No. 12B.

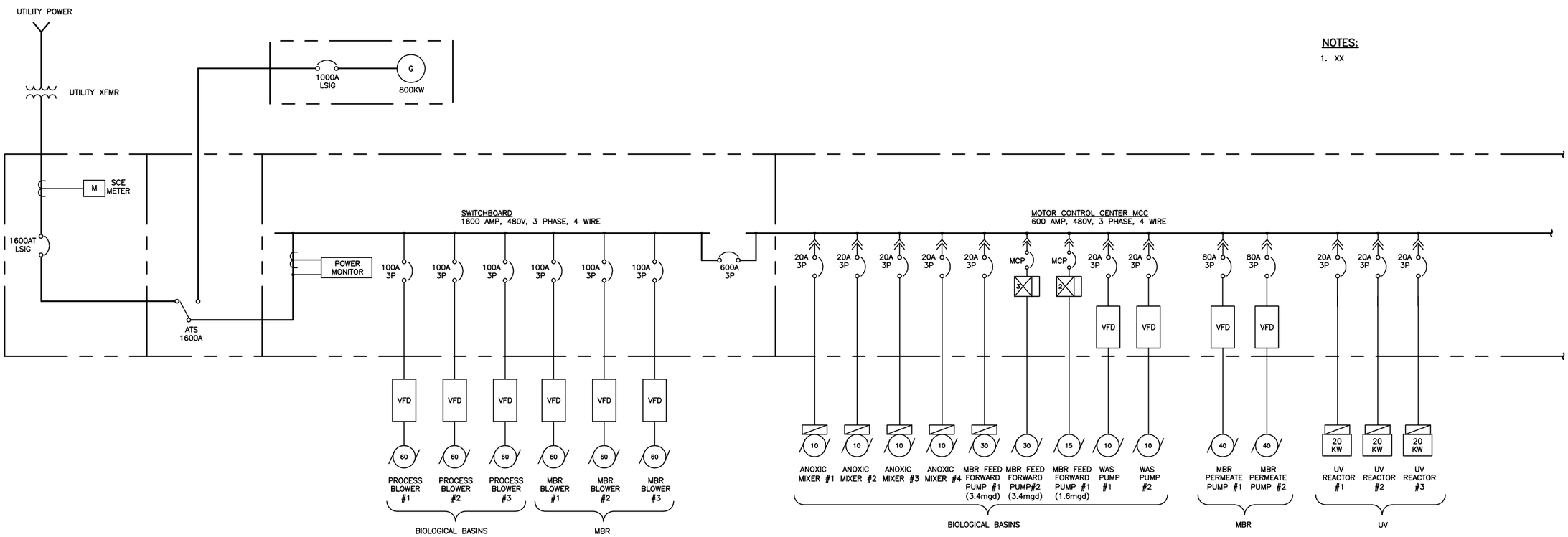

NOTES:

1. XX

SWITCHBOARD/MCC SINGLE LINE DIAGRAM

NTS

VICTOR VALLEY WASTEWATER RECLAMATION AUTHORITY
APPLE VALLEY WRP - PRELIMINARY DESIGN REPORT

HDR

carollo

E001

NOTES:

1. XX

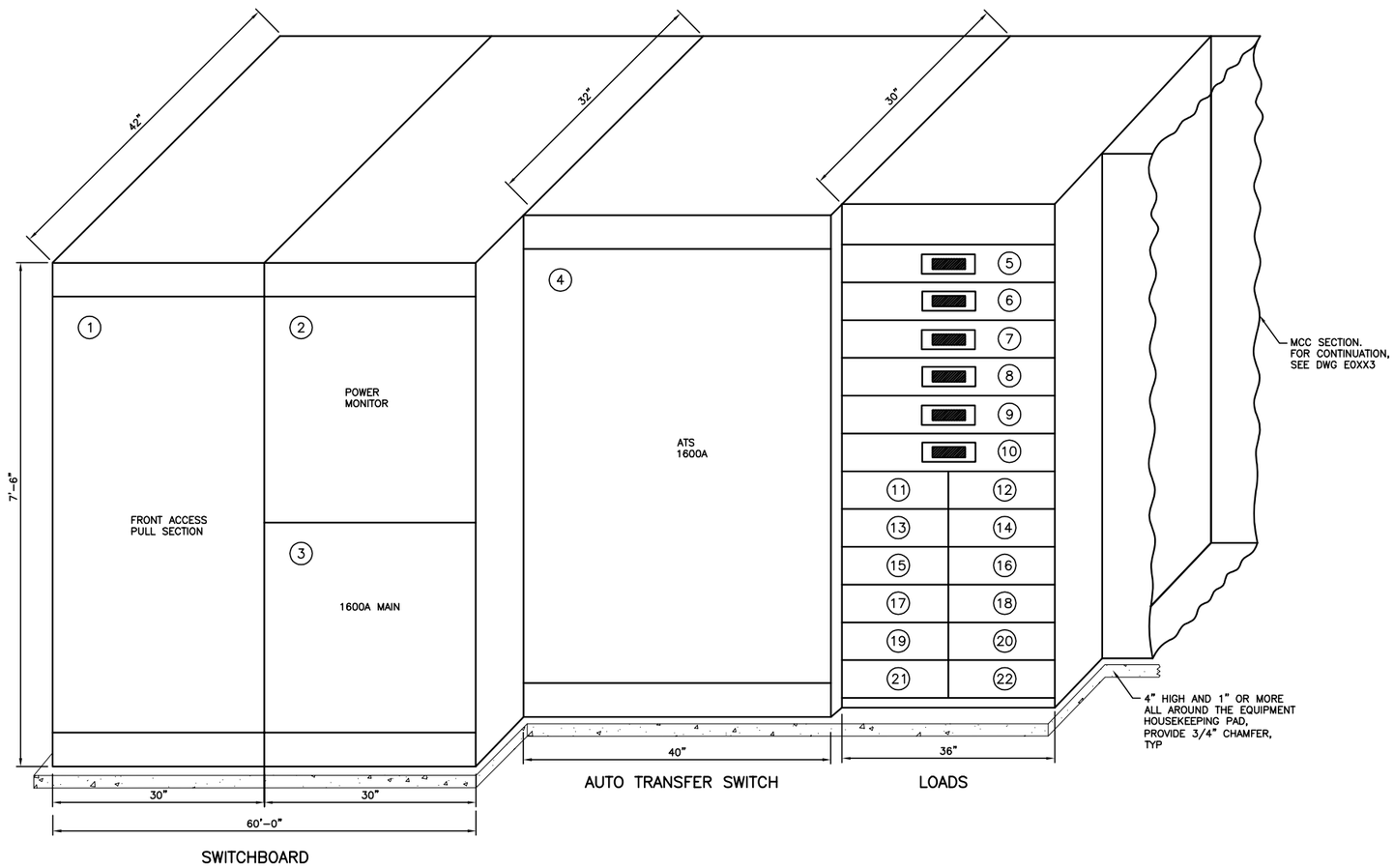

SWITCHBOARD ELEVATION

NTS

SWITCBOARD		
ITEM	DESCRIPTION	REMARK
1	PULL SECTION	
2	POWER MONITOR	50A, 3P BREAKER
3	MAIN BREAKER	1600A, 3P BREAKER
4	AUO TRANSFER SWITCH (ATS)	1600 AMP RATIMG
5	PROCESS BLOWER #1	VFD
6	PROCESS BLOWER #2	VFD
7	PROCESS BLOWER #3	VFD
8	MBR BLOWER #1	VFD
9	MBR BLOWER #2	VFD
10	MBR BLOWER #3	VFD
11	SPACE	
12	SPACE	
13	SPACE	
14	SPACE	
15	SPACE	
16	SPACE	
17	SPACE	
13	SPACE	
14	SPACE	
15	SPACE	
16	SPACE	
17	SPACE	

VICTOR VALLEY WASTEWATER RECLAMATION AUTHORITY
APPLE VALLEY WRP - PRELIMINARY DESIGN REPORT

HDR

carollo

NOTES:

1. XX

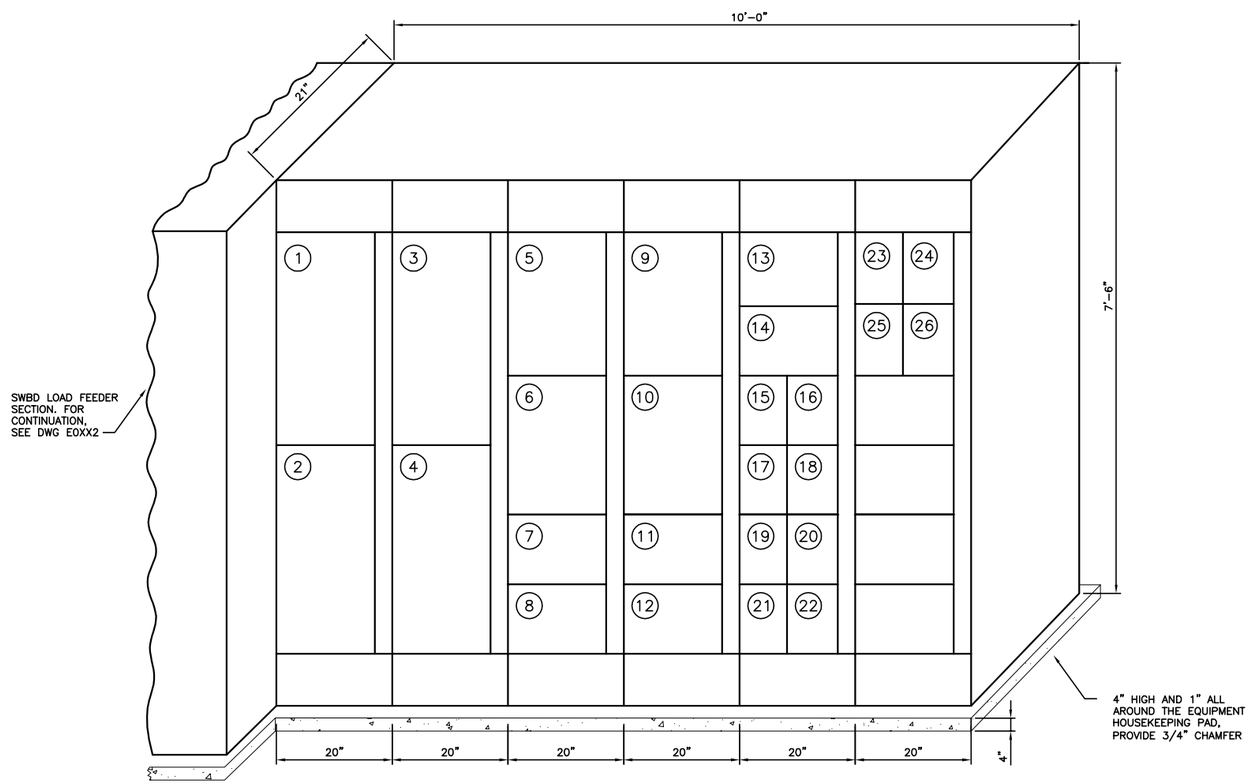

MCC ELEVATION

NTS

MCC		
ITEM	DESCRIPTION	REMARK
1	WAS PUMP #1	VFD
2	WAS PUMP #2	VFD
3	MBR PERMEATE PUMP #1	VFD
4	MBR PERMEATE PUMP #2	VFD
5	MBR FEED FORWARD PUMP #1	SIZE 3 STARTER (3.4 mgd)
6	MBR FEED FORWARD PUMP #2	SIZE 3 STARTER (3.4 mgd)
7	MBR FEED FORWARD PUMP #1	SIZE 2 STARTER (1.6 mgd)
8	SPACE	
9	RECLAIMED WATER PUMP #1	SIZE 3 STARTER
10	RECLAIMED WATER PUMP #2	SIZE 3 STARTER
11	ODOR CONTROL SYSTEM #1	SIZE 1 STARTER
12	ODOR CONTROL SYSTEM #12	SIZE 1 STARTER
13	ROTARY DRUM SCREEN #1	SIZE 00 STARTER
14	ROTARY DRUM SCREEN #2	SIZE 00 STARTER
15	SCREENING WASHER/COMPACTOR #1	15A, 3P BREAKER
16	SCREENING WASHER/COMPACTOR #2	15A, 3P BREAKER
17	ANOXIC MIXER #1	20A, 3P BREAKER
18	ANOXIC MIXER #2	20A, 3P BREAKER
19	ANOXIC MIXER #3	20A, 3P BREAKER
20	ANOXIC MIXER #4	20A, 3P BREAKER
21	UV REACTOR #1	20A, 3P BREAKER
22	UV REACTOR #2	20A, 3P BREAKER
23	UV REACTOR #3	20A, 3P BREAKER
24	SPACE	
25	GRIT PUMP (FUTURE)	SIZE XX STARTER
26	GRIT CLASSIFIER (FUTURE)	SIZE XX STARTER

VICTOR VALLEY WASTEWATER RECLAMATION AUTHORITY
APPLE VALLEY WRP - PRELIMINARY DESIGN REPORT

HDR

carollo

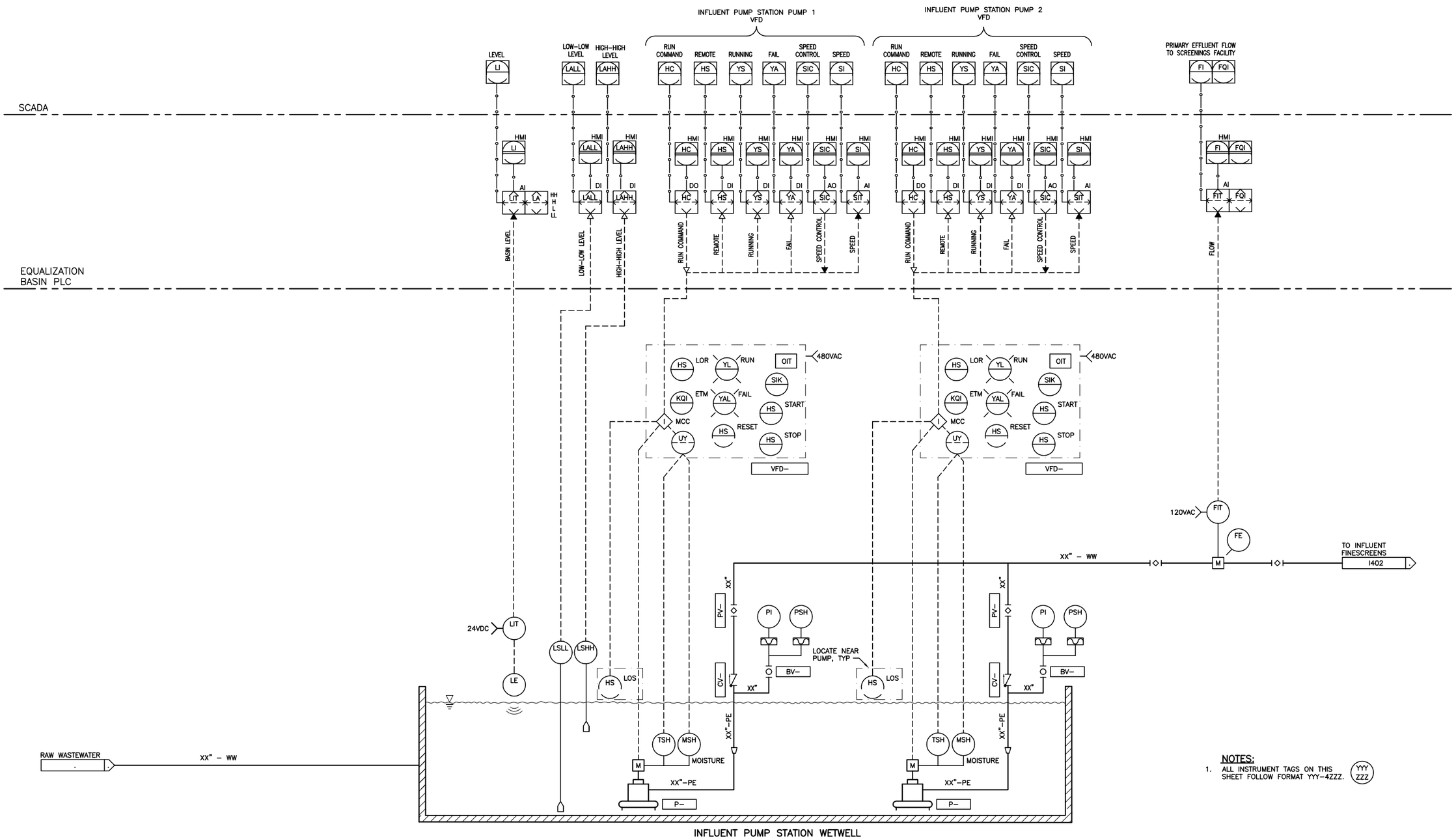

VICTOR VALLEY WASTEWATER RECLAMATION AUTHORITY
APPLE VALLEY WRP - PRELIMINARY DESIGN REPORT

HDR

carollo

I401

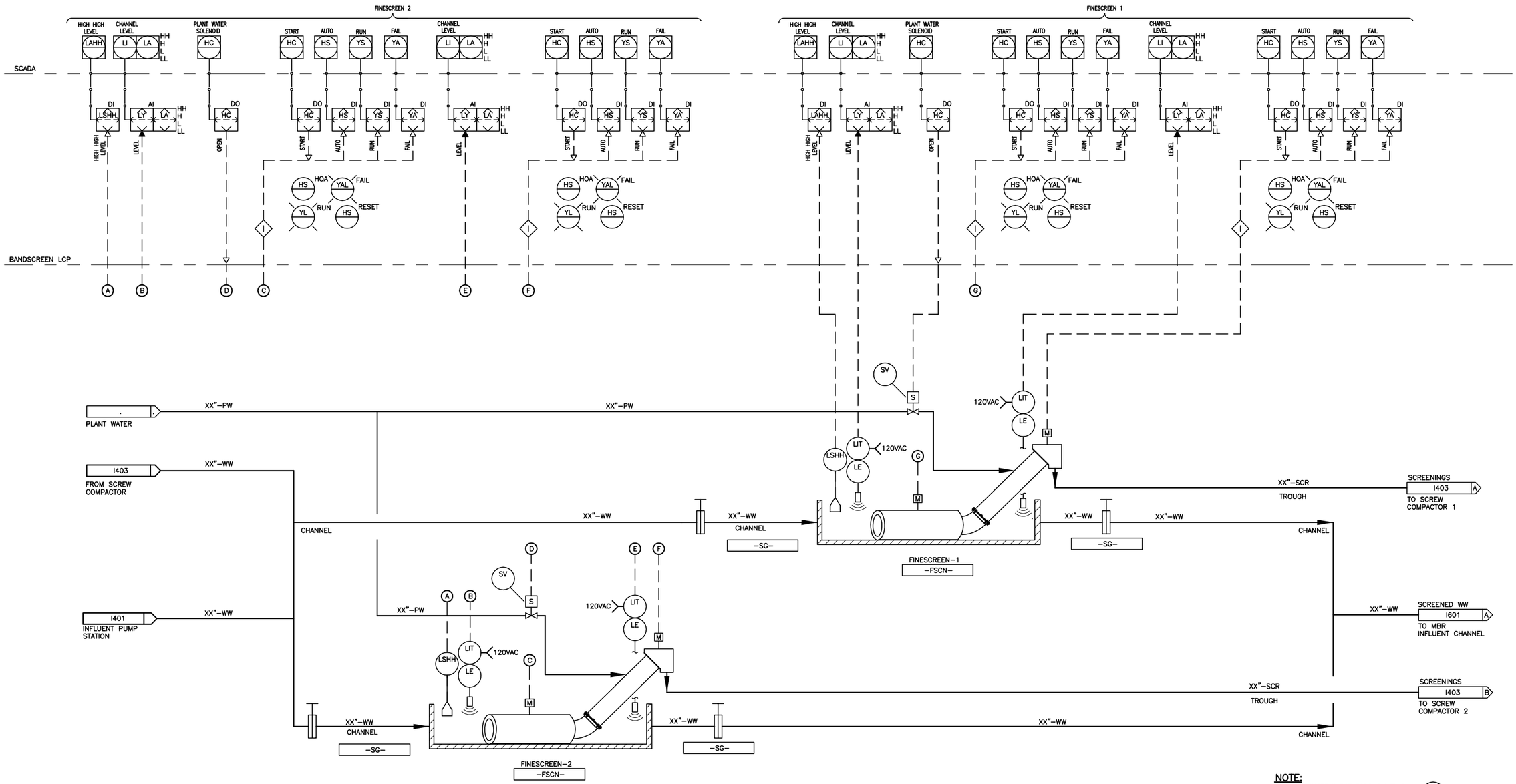

NOTE:
1. ALL INSTRUMENT TAGS ON THIS SHEET FOLLOW FORMAT YYY-4ZZZ.

VICTOR VALLEY WASTEWATER RECLAMATION AUTHORITY
APPLE VALLEY WRP - PRELIMINARY DESIGN REPORT

HDR

carollo

I402

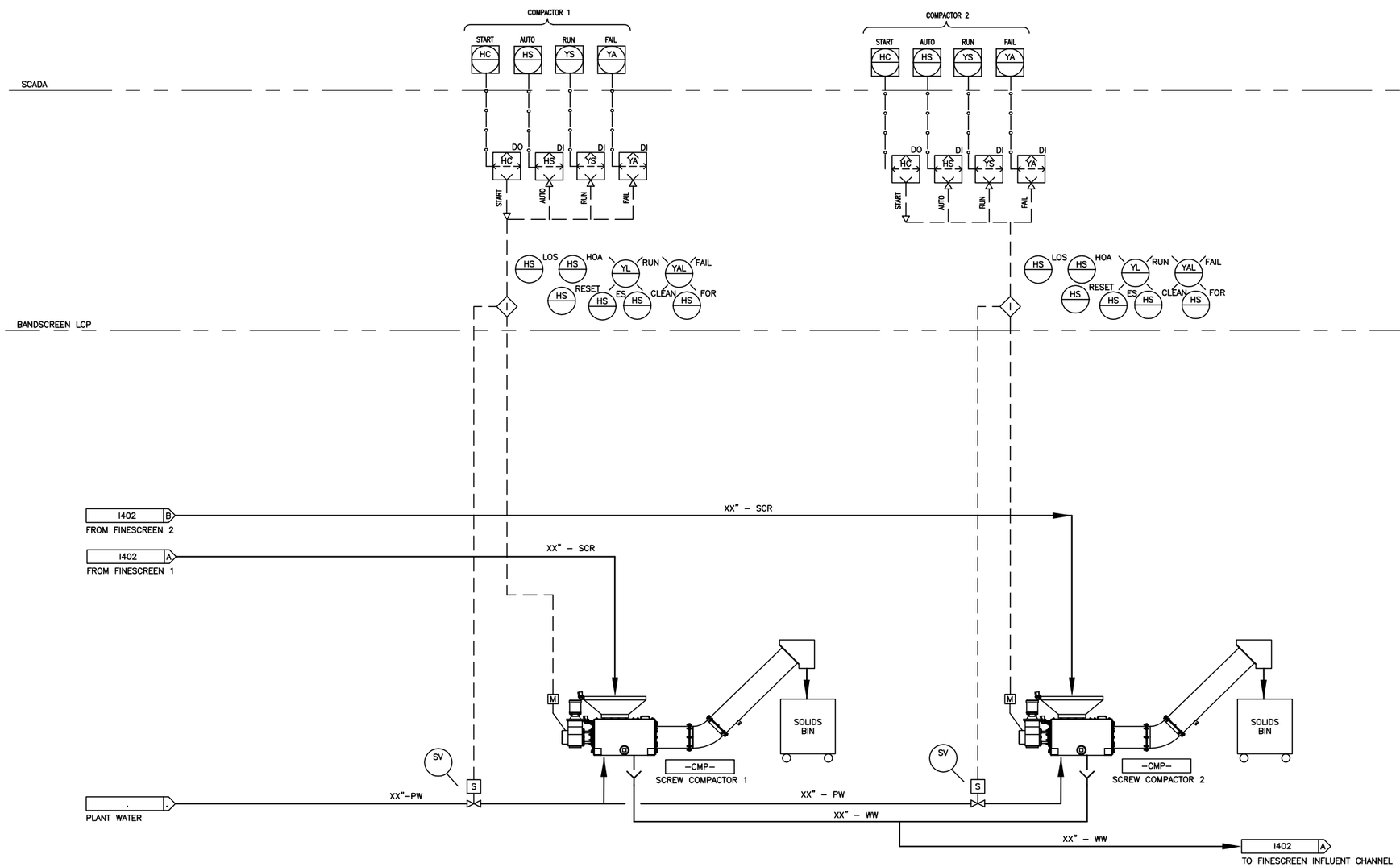

NOTE:

1. ALL INSTRUMENT TAGS ON THIS SHEET FOLLOW FORMAT YYY–4ZZZ. (YYY ZZZ)

VICTOR VALLEY WASTEWATER RECLAMATION AUTHORITY
APPLE VALLEY WRP - PRELIMINARY DESIGN REPORT

HDR

carollo

I403

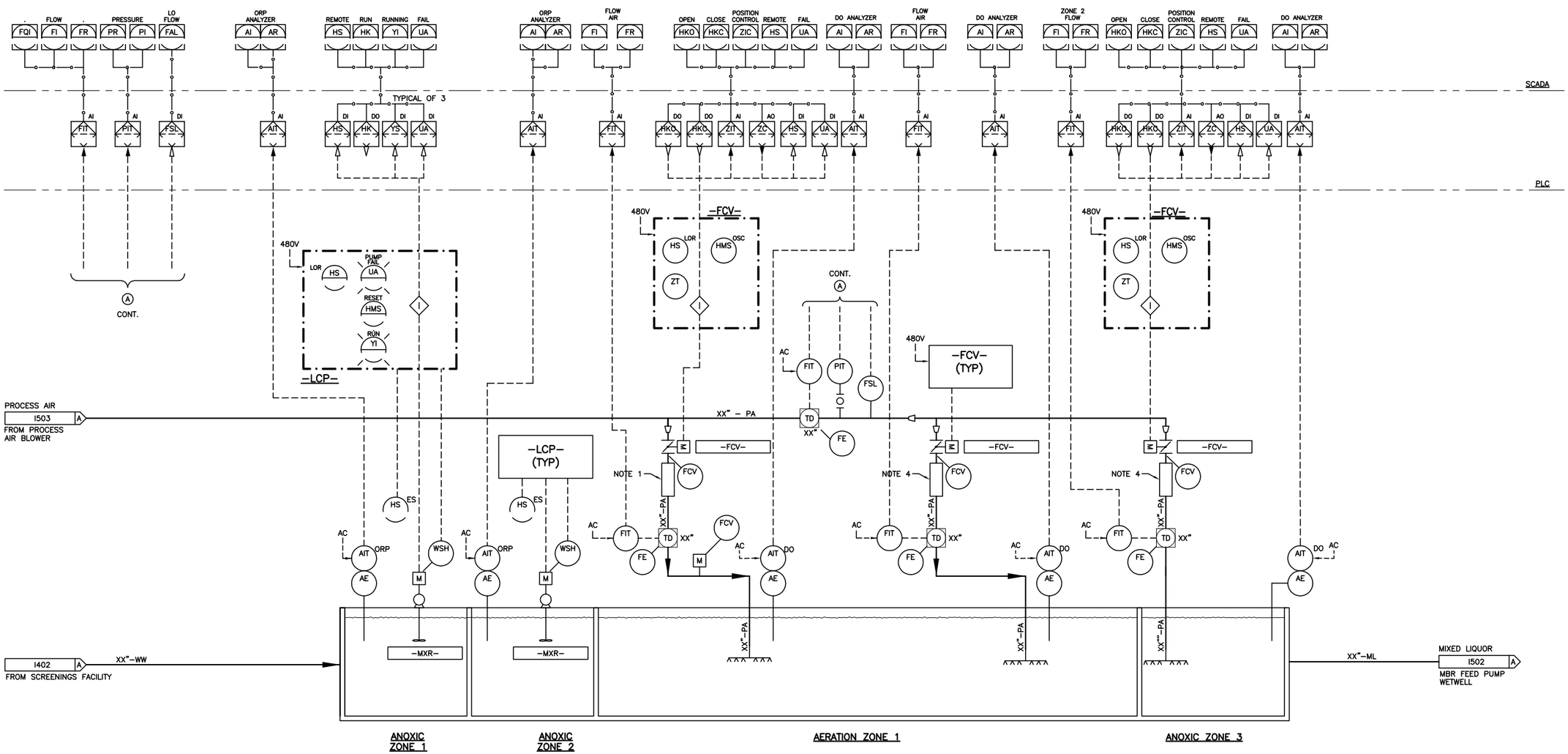

NOTES:

1. VORTAB AIRFLOW CONDITIONER.

VICTOR VALLEY WASTEWATER RECLAMATION AUTHORITY
APPLE VALLEY WRP - PRELIMINARY DESIGN REPORT

HDR

carollo

I501

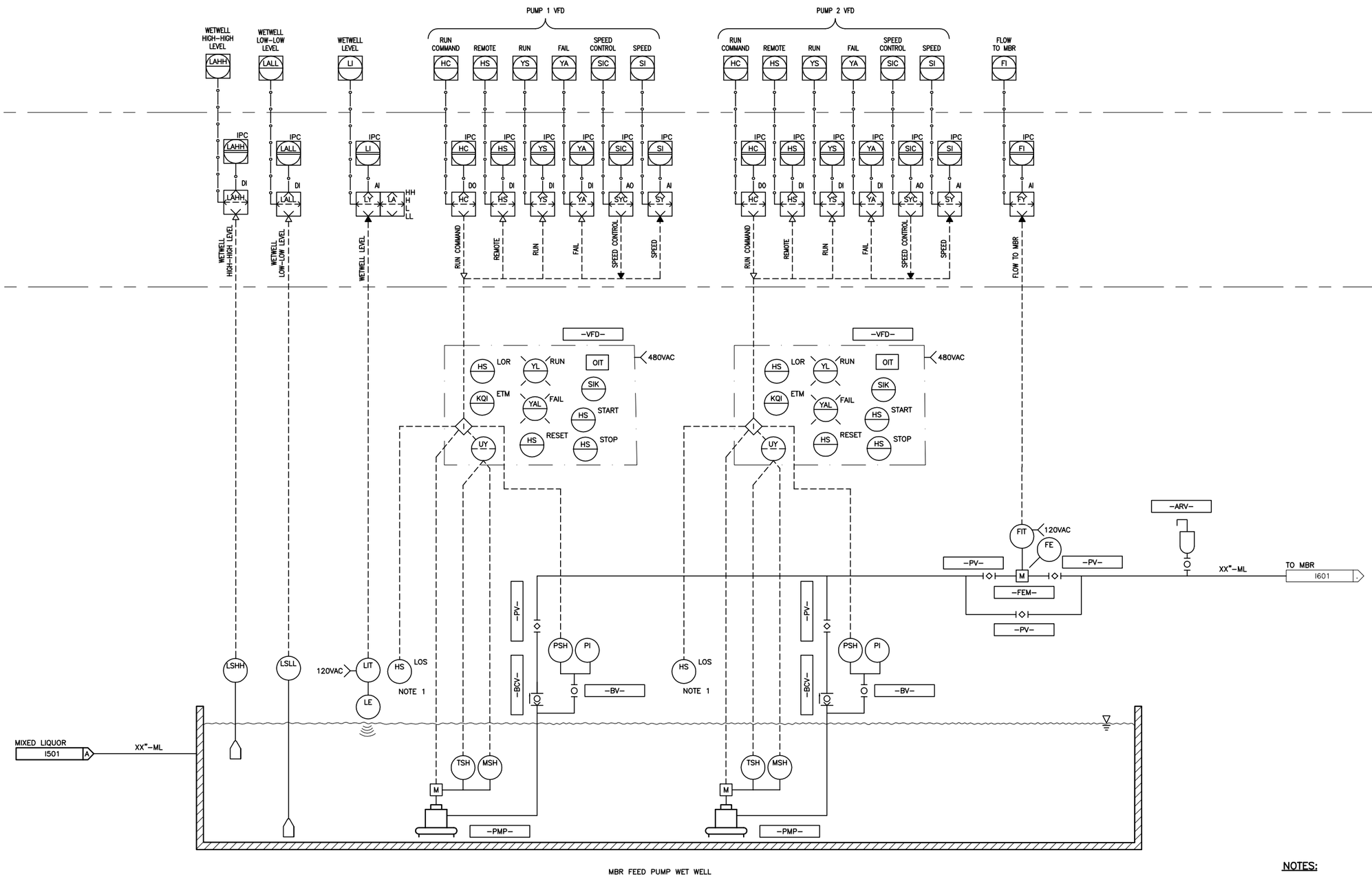

NOTES:

1. LOCATE NEAR PUMP.

VICTOR VALLEY WASTEWATER RECLAMATION AUTHORITY
APPLE VALLEY WRP - PRELIMINARY DESIGN REPORT

carollo HDR

I502

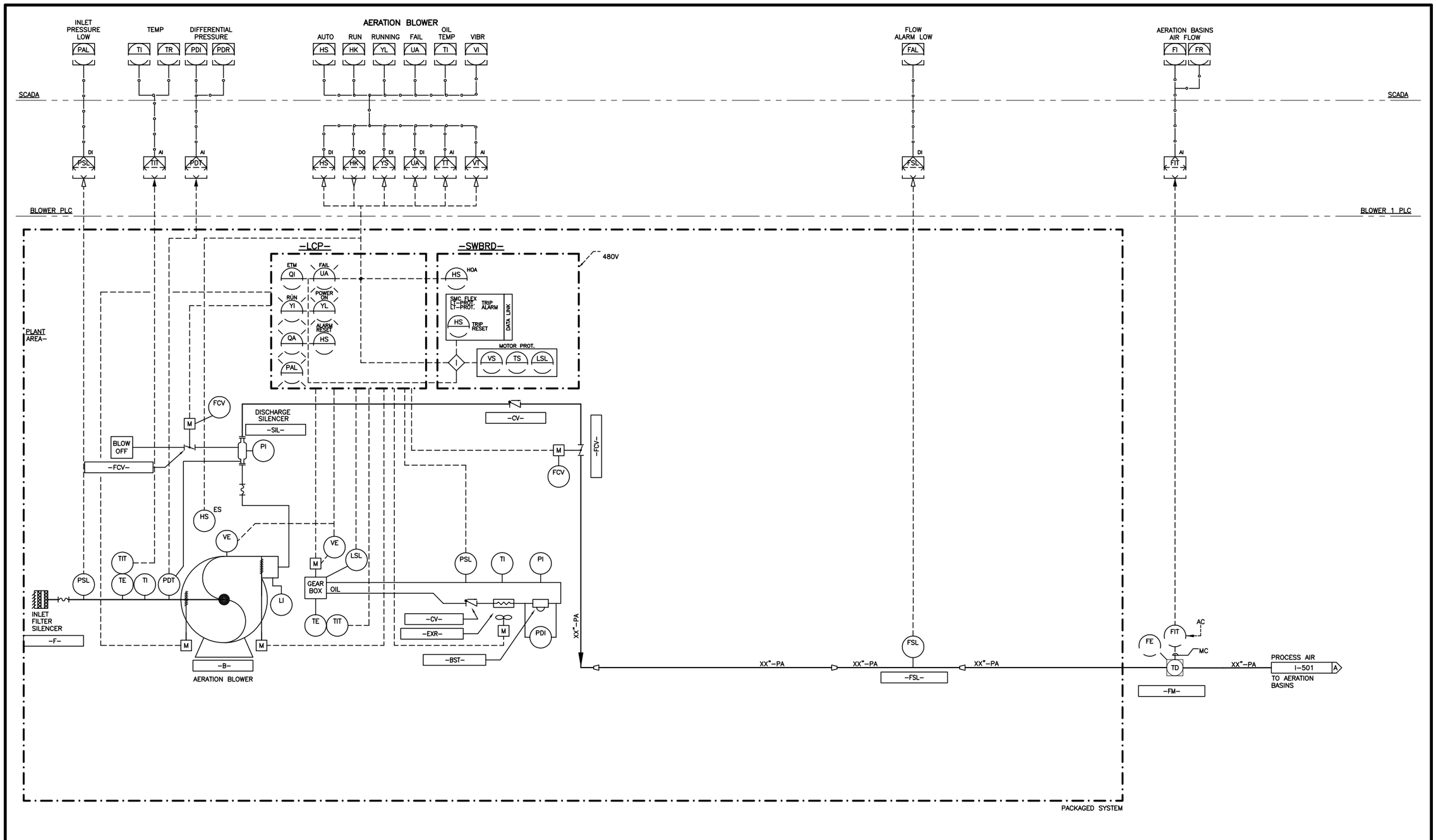

VICTOR VALLEY WASTEWATER RECLAMATION AUTHORITY
APPLE VALLEY WRP - PRELIMINARY DESIGN REPORT

HDR

carollo

I503

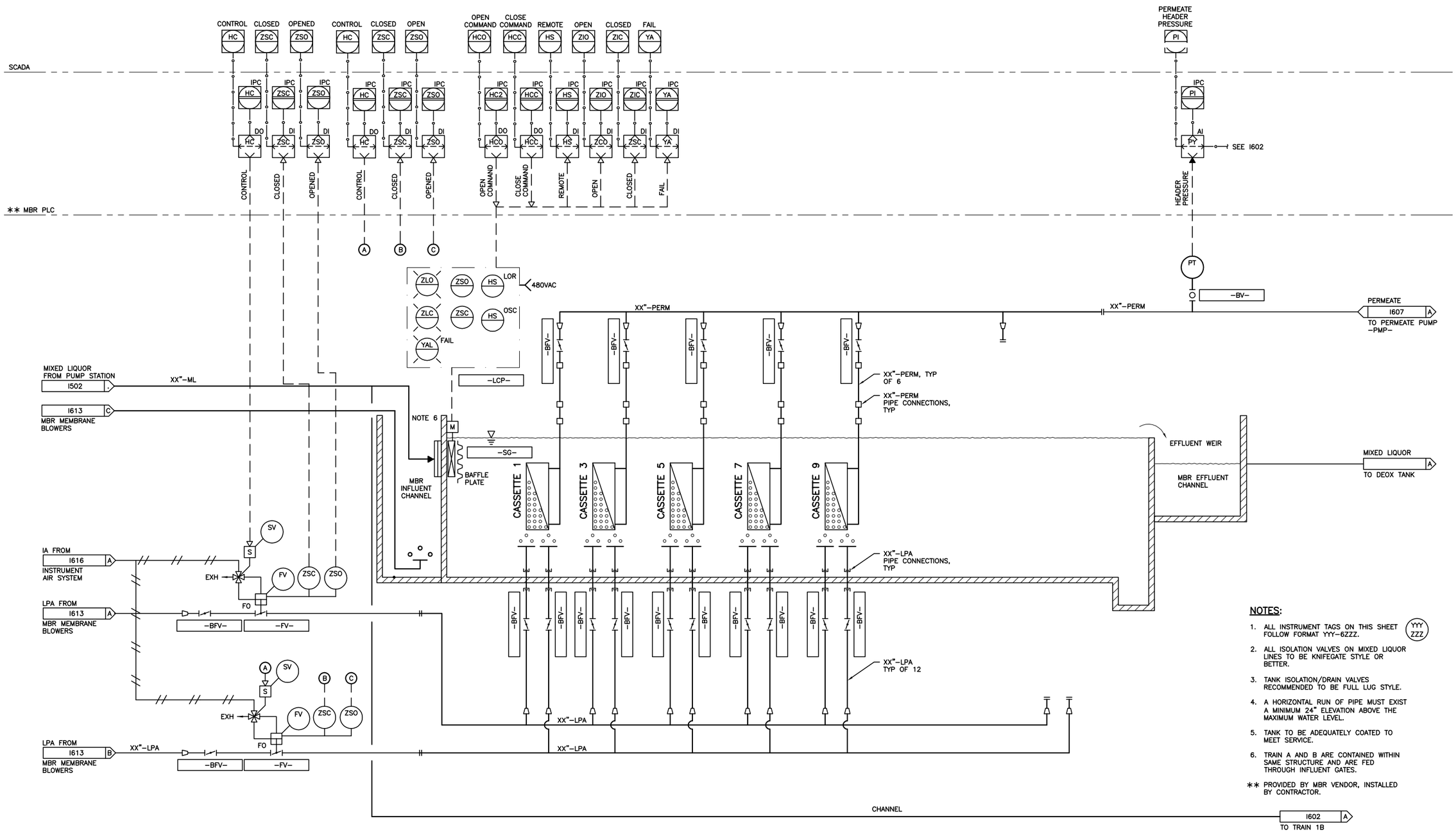

NOTES:

1. ALL INSTRUMENT TAGS ON THIS SHEET FOLLOW FORMAT YYY-6ZZZ.
2. ALL ISOLATION VALVES ON MIXED LIQUOR LINES TO BE KNIFEGATE STYLE OR BETTER.
3. TANK ISOLATION/DRAIN VALVES RECOMMENDED TO BE FULL LUG STYLE.
4. A HORIZONTAL RUN OF PIPE MUST EXIST A MINIMUM 24" ELEVATION ABOVE THE MAXIMUM WATER LEVEL.
5. TANK TO BE ADEQUATELY COATED TO MEET SERVICE.
6. TRAIN A AND B ARE CONTAINED WITHIN SAME STRUCTURE AND ARE FED THROUGH INFLUENT GATES.

** PROVIDED BY MBR VENDOR, INSTALLED BY CONTRACTOR.

YYY ZZZ

VICTOR VALLEY WASTEWATER RECLAMATION AUTHORITY
APPLE VALLEY WRP - PRELIMINARY DESIGN REPORT

HDR

carollo

I601

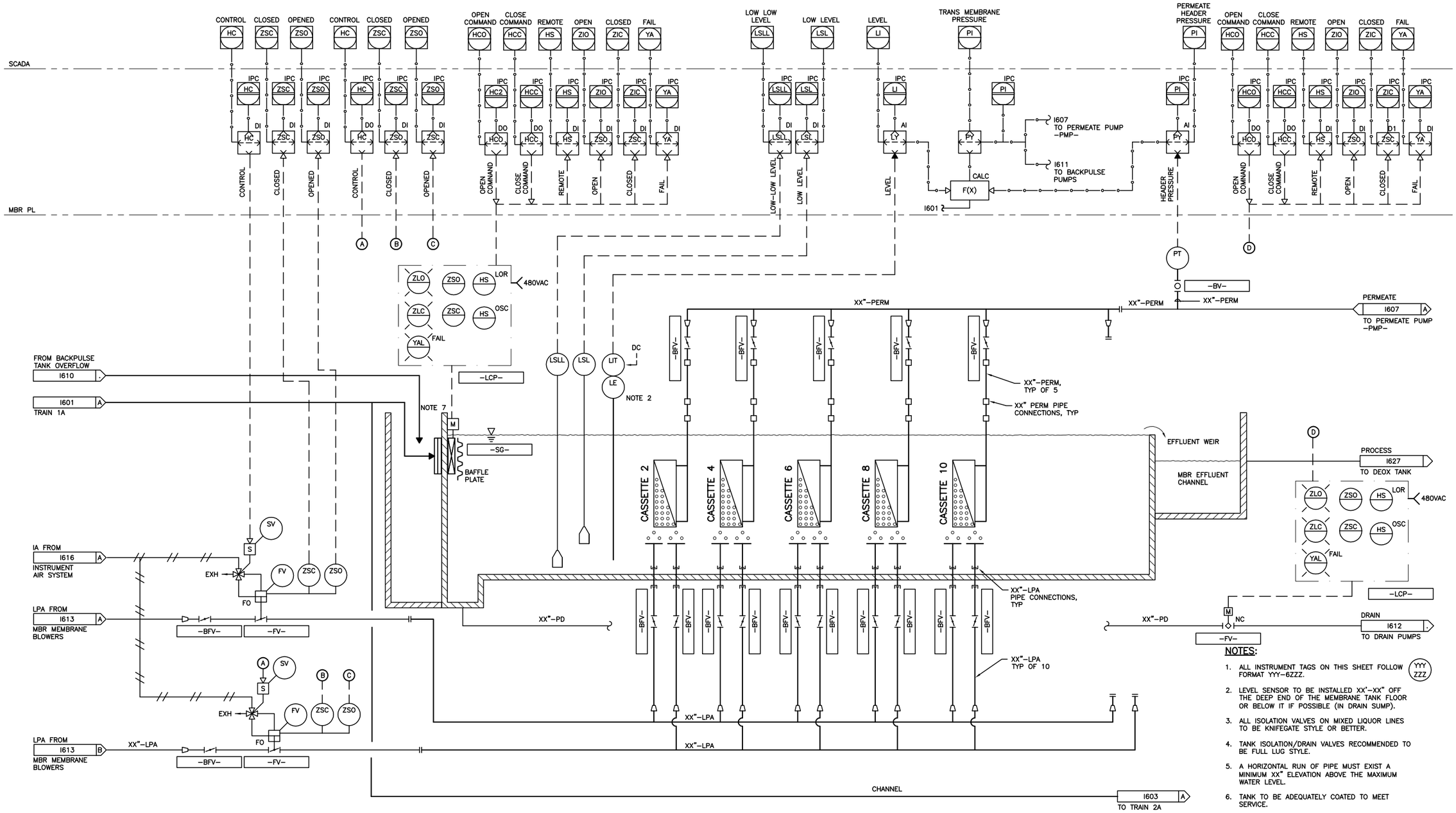

NOTES:

1. ALL INSTRUMENT TAGS ON THIS SHEET FOLLOW FORMAT YYY-6ZZZ. (YYY ZZZ)
2. LEVEL SENSOR TO BE INSTALLED XX'-XX" OFF THE DEEP END OF THE MEMBRANE TANK FLOOR OR BELOW IT IF POSSIBLE (IN DRAIN SUMP).
3. ALL ISOLATION VALVES ON MIXED LIQUOR LINES TO BE KNIFEGATE STYLE OR BETTER.
4. TANK ISOLATION/DRAIN VALVES RECOMMENDED TO BE FULL LUG STYLE.
5. A HORIZONTAL RUN OF PIPE MUST EXIST A MINIMUM XX" ELEVATION ABOVE THE MAXIMUM WATER LEVEL.
6. TANK TO BE ADEQUATELY COATED TO MEET SERVICE.
7. MEMBRANE TRAIN B IS CONTAINED IN SAME STRUCTURE AS TRAIN A AND FED THROUGH INFLUENT GATES AS SHOWN ON I601.

VICTOR VALLEY WASTEWATER RECLAMATION AUTHORITY
APPLE VALLEY WRP - PRELIMINARY DESIGN REPORT

HDR

carollo

I602

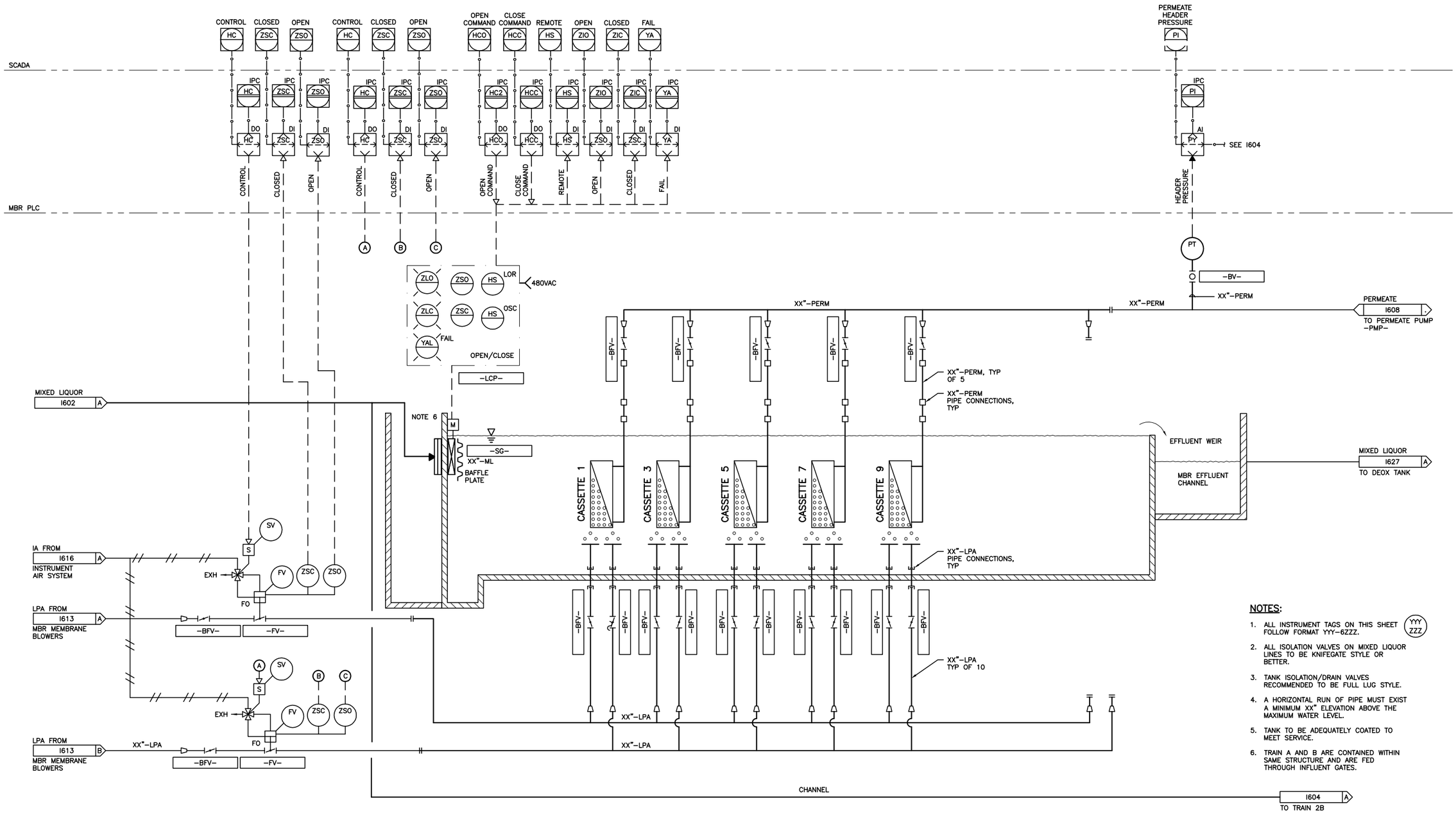

NOTES:

1. ALL INSTRUMENT TAGS ON THIS SHEET FOLLOW FORMAT YYY-6ZZZ. (YYY ZZZ)
2. ALL ISOLATION VALVES ON MIXED LIQUOR LINES TO BE KNIFEGATE STYLE OR BETTER.
3. TANK ISOLATION/DRAIN VALVES RECOMMENDED TO BE FULL LUG STYLE.
4. A HORIZONTAL RUN OF PIPE MUST EXIST A MINIMUM XX" ELEVATION ABOVE THE MAXIMUM WATER LEVEL.
5. TANK TO BE ADEQUATELY COATED TO MEET SERVICE.
6. TRAIN A AND B ARE CONTAINED WITHIN SAME STRUCTURE AND ARE FED THROUGH INFLUENT GATES.

VICTOR VALLEY WASTEWATER RECLAMATION AUTHORITY
APPLE VALLEY WRP - PRELIMINARY DESIGN REPORT

HDR

carollo

I603

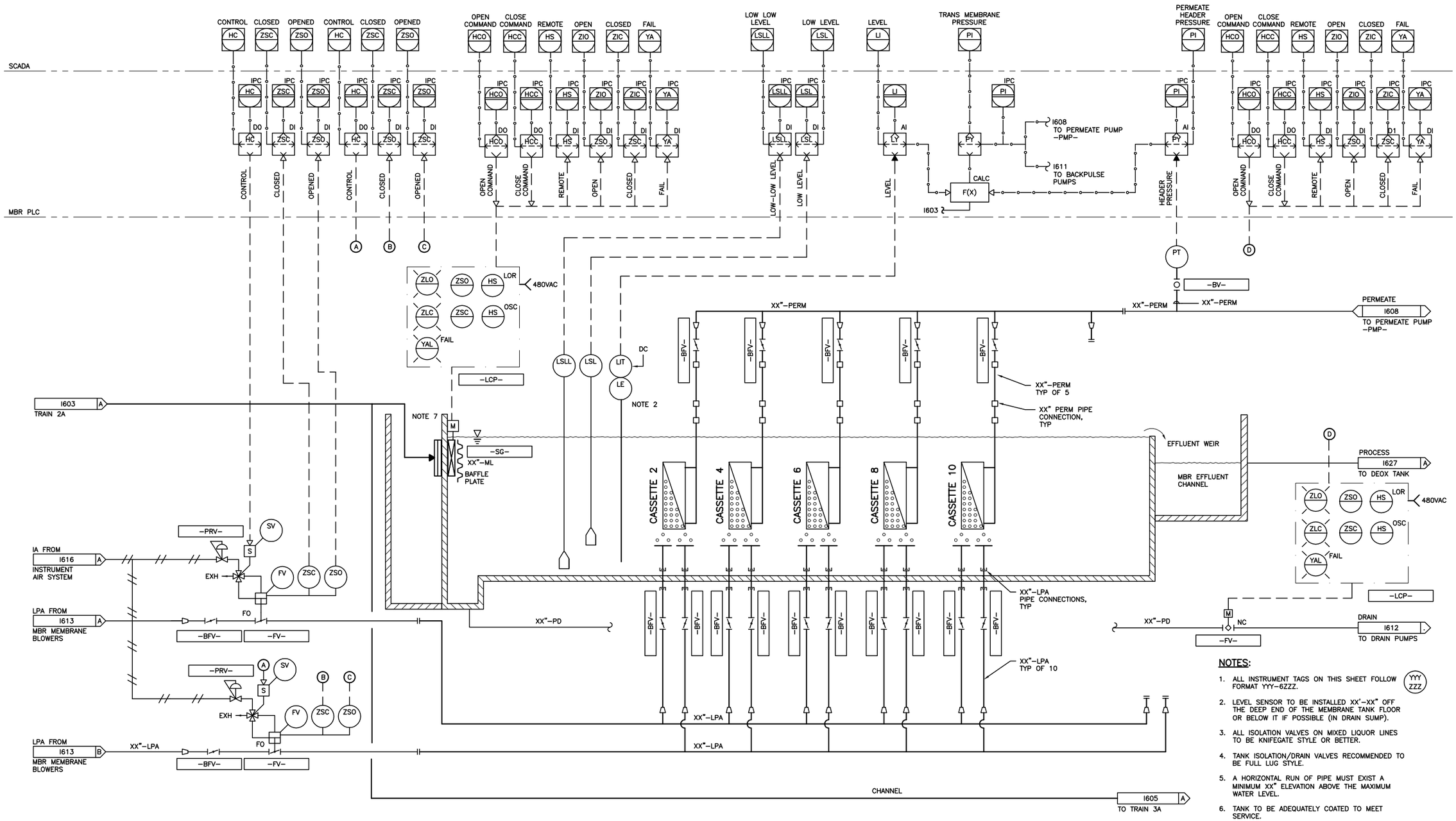

NOTES:

1. ALL INSTRUMENT TAGS ON THIS SHEET FOLLOW FORMAT YYY-6ZZZ.
2. LEVEL SENSOR TO BE INSTALLED XX'-XX" OFF THE DEEP END OF THE MEMBRANE TANK FLOOR OR BELOW IT IF POSSIBLE (IN DRAIN SUMP).
3. ALL ISOLATION VALVES ON MIXED LIQUOR LINES TO BE KNIFEGATE STYLE OR BETTER.
4. TANK ISOLATION/DRAIN VALVES RECOMMENDED TO BE FULL LUG STYLE.
5. A HORIZONTAL RUN OF PIPE MUST EXIST A MINIMUM XX" ELEVATION ABOVE THE MAXIMUM WATER LEVEL.
6. TANK TO BE ADEQUATELY COATED TO MEET SERVICE.
7. MEMBRANE TRAIN B IS CONTAINED IN SAME STRUCTURE AS TRAIN A AND FED THROUGH INFLUENT GATES AS SHOWN ON I601.

YYY ZZZ

VICTOR VALLEY WASTEWATER RECLAMATION AUTHORITY
APPLE VALLEY WRP - PRELIMINARY DESIGN REPORT

HDR

carollo

I604

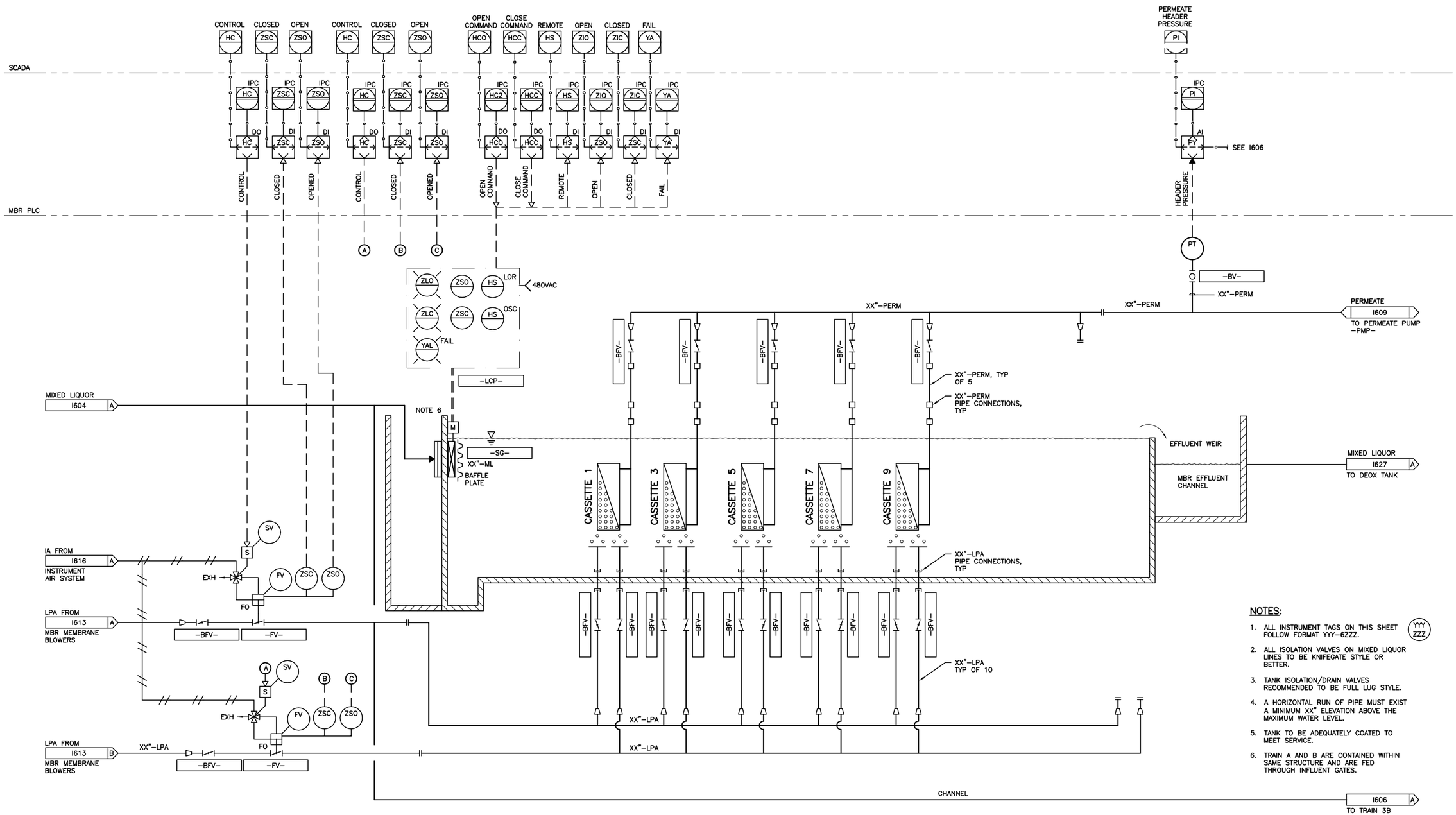

NOTES:

1. ALL INSTRUMENT TAGS ON THIS SHEET FOLLOW FORMAT YYY-6ZZZ. (YYY ZZZ)
2. ALL ISOLATION VALVES ON MIXED LIQUOR LINES TO BE KNIFEGATE STYLE OR BETTER.
3. TANK ISOLATION/DRAIN VALVES RECOMMENDED TO BE FULL LUG STYLE.
4. A HORIZONTAL RUN OF PIPE MUST EXIST A MINIMUM XX" ELEVATION ABOVE THE MAXIMUM WATER LEVEL.
5. TANK TO BE ADEQUATELY COATED TO MEET SERVICE.
6. TRAIN A AND B ARE CONTAINED WITHIN SAME STRUCTURE AND ARE FED THROUGH INFLUENT GATES.

VICTOR VALLEY WASTEWATER RECLAMATION AUTHORITY
APPLE VALLEY WRP - PRELIMINARY DESIGN REPORT

HDR

carollo

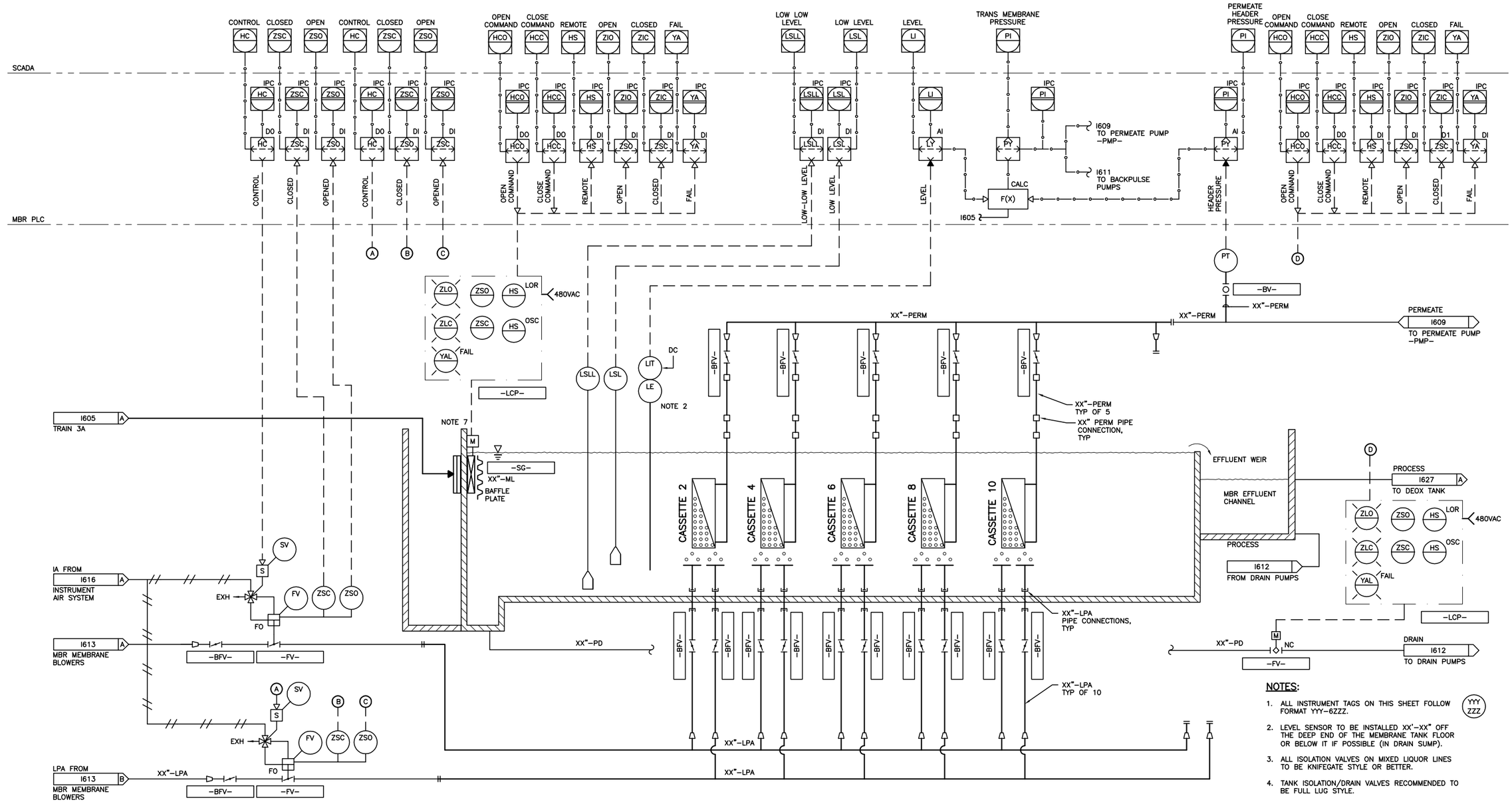

NOTES:

1. ALL INSTRUMENT TAGS ON THIS SHEET FOLLOW FORMAT YYY-6ZZZ.
2. LEVEL SENSOR TO BE INSTALLED XX'-XX" OFF THE DEEP END OF THE MEMBRANE TANK FLOOR OR BELOW IT IF POSSIBLE (IN DRAIN SUMP).
3. ALL ISOLATION VALVES ON MIXED LIQUOR LINES TO BE KNIFEGATE STYLE OR BETTER.
4. TANK ISOLATION/DRAIN VALVES RECOMMENDED TO BE FULL LUG STYLE.
5. A HORIZONTAL RUN OF PIPE MUST EXIST A MINIMUM XX" ELEVATION ABOVE THE MAXIMUM WATER LEVEL.
6. TANK TO BE ADEQUATELY COATED TO MEET SERVICE.
7. MEMBRANE TRAIN B IS CONTAINED IN SAME STRUCTURE AS TRAIN A AND FED THROUGH INFLUENT GATES AS SHOWN ON I601.

YYY ZZZ

VICTOR VALLEY WASTEWATER RECLAMATION AUTHORITY
APPLE VALLEY WRP - PRELIMINARY DESIGN REPORT

HDR

carollo

I606

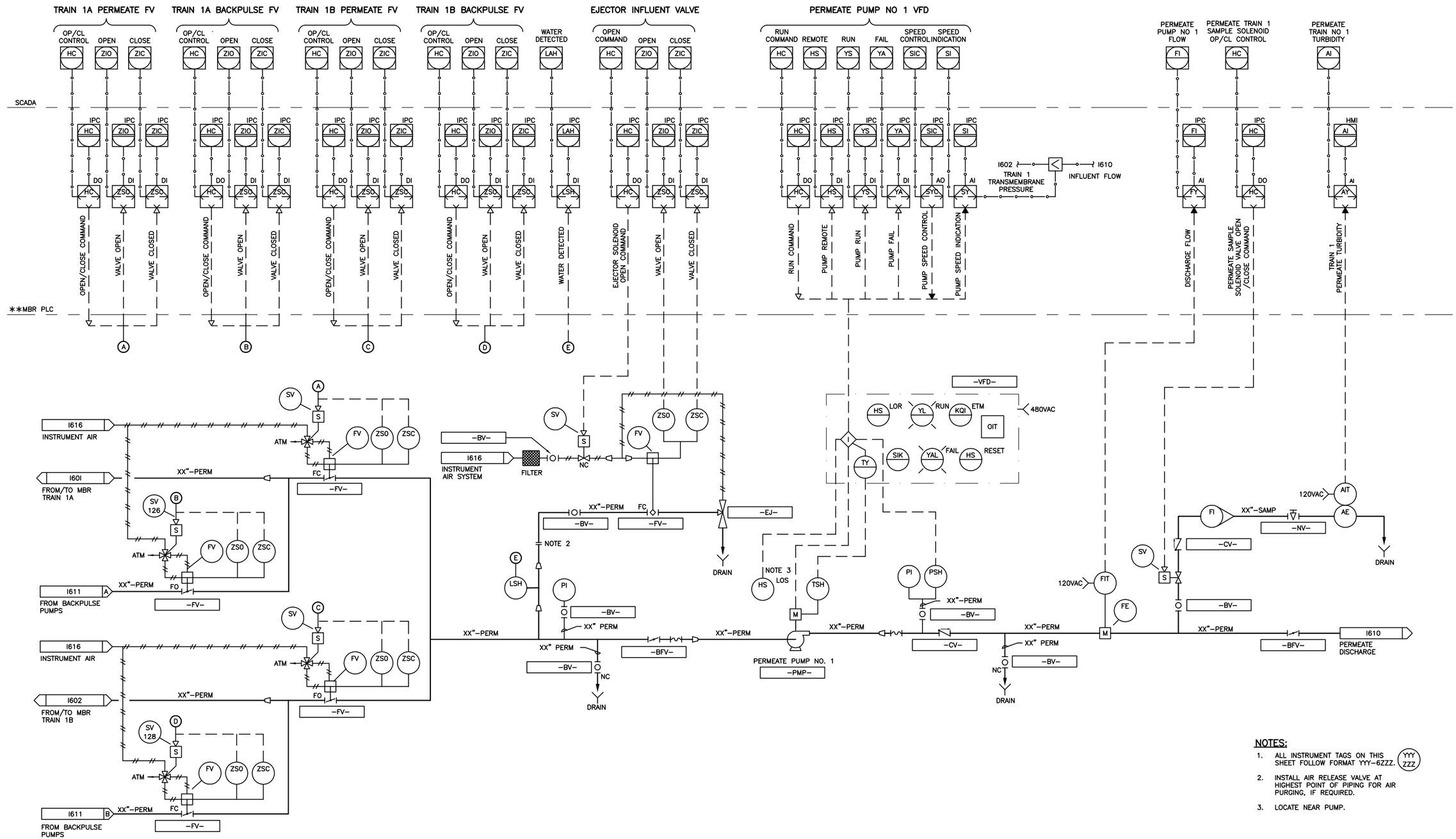

NOTES:

1. ALL INSTRUMENT TAGS ON THIS SHEET FOLLOW FORMAT YYY-6ZZZ. (YYY ZZZ)
2. INSTALL AIR RELEASE VALVE AT HIGHEST POINT OF PIPING FOR AIR PURGING, IF REQUIRED.
3. LOCATE NEAR PUMP.

VICTOR VALLEY WASTEWATER RECLAMATION AUTHORITY
APPLE VALLEY WRP - PRELIMINARY DESIGN REPORT

HDR

carollo

I607

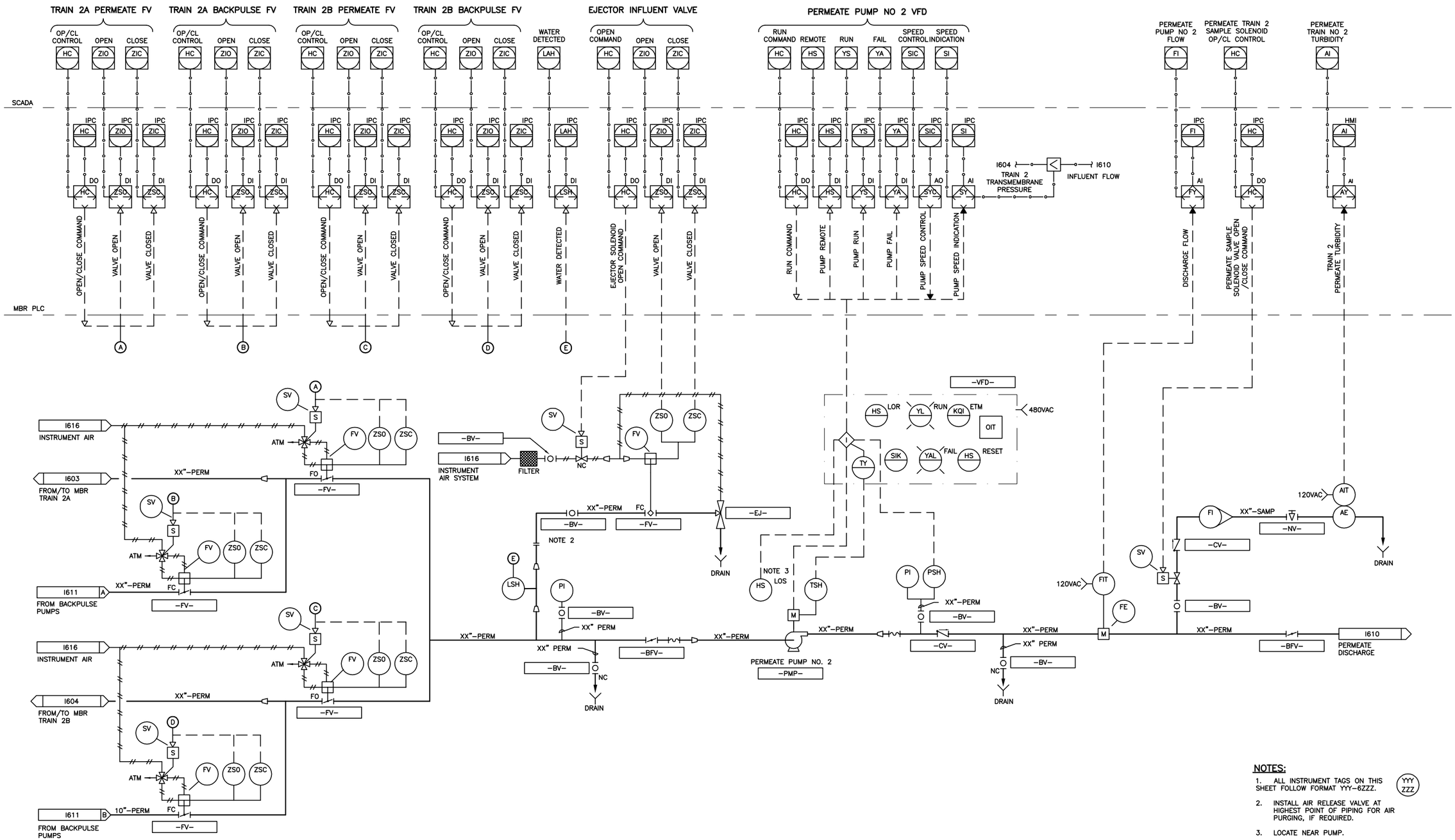

NOTES:

1. ALL INSTRUMENT TAGS ON THIS SHEET FOLLOW FORMAT YYY-6ZZZ. (YYY ZZZ)
2. INSTALL AIR RELEASE VALVE AT HIGHEST POINT OF PIPING FOR AIR PURGING, IF REQUIRED.
3. LOCATE NEAR PUMP.

VICTOR VALLEY WASTEWATER RECLAMATION AUTHORITY
APPLE VALLEY WRP - PRELIMINARY DESIGN REPORT

HDR

carollo

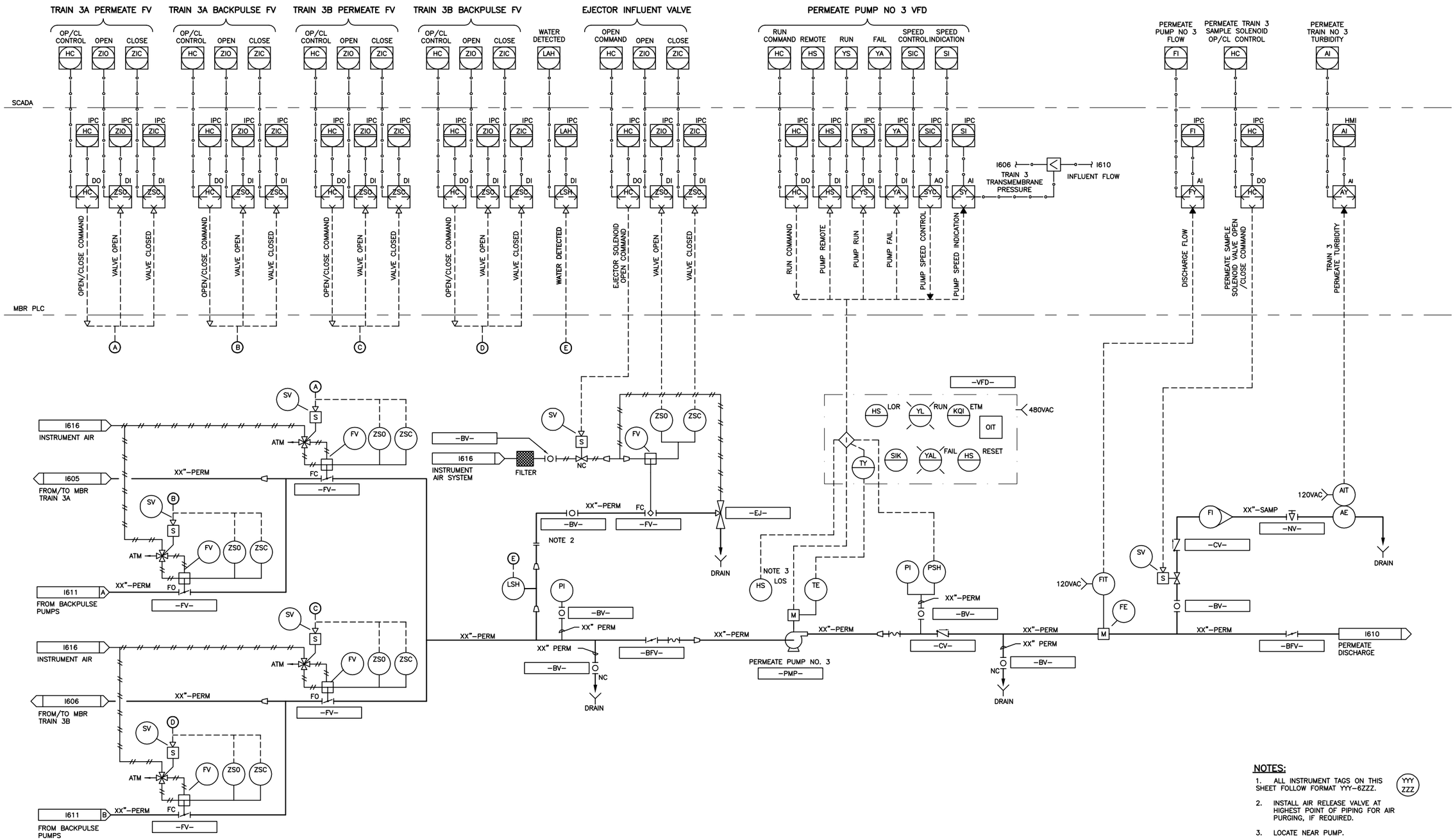

NOTES:

1. ALL INSTRUMENT TAGS ON THIS SHEET FOLLOW FORMAT YYY-6ZZZ.
2. INSTALL AIR RELEASE VALVE AT HIGHEST POINT OF PIPING FOR AIR PURGING, IF REQUIRED.
3. LOCATE NEAR PUMP.

VICTOR VALLEY WASTEWATER RECLAMATION AUTHORITY
APPLE VALLEY WRP - PRELIMINARY DESIGN REPORT

HDR

carollo

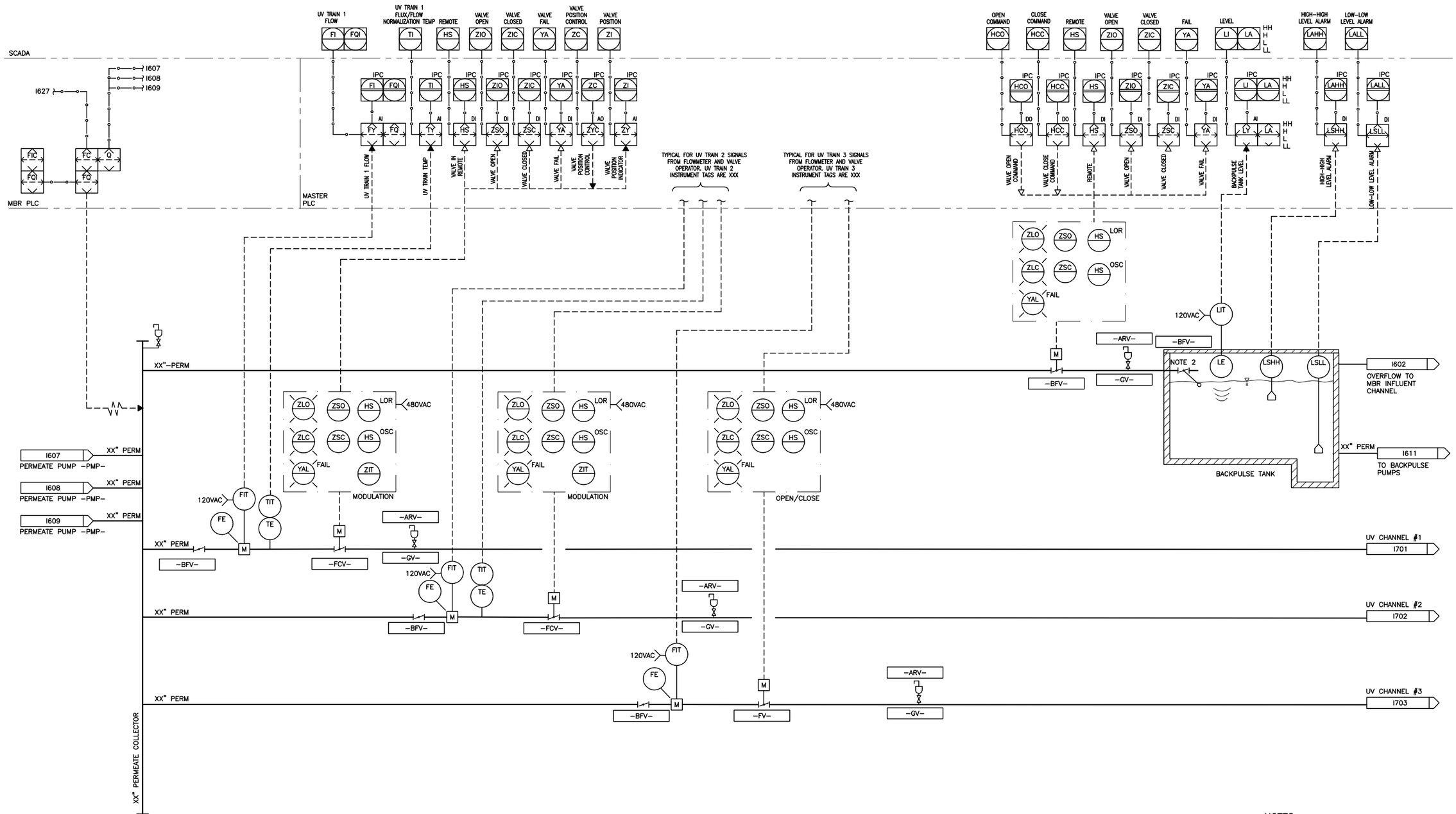

NOTES:

1. ALL INSTRUMENT TAGS ON THIS SHEET FOLLOW FORMAT YYY-6ZZZ. (YYY ZZZ)
2. BFV WITH MECHANICAL FLOAT SWITCH.

VICTOR VALLEY WASTEWATER RECLAMATION AUTHORITY
APPLE VALLEY WRP - PRELIMINARY DESIGN REPORT

HDR

carollo

I610

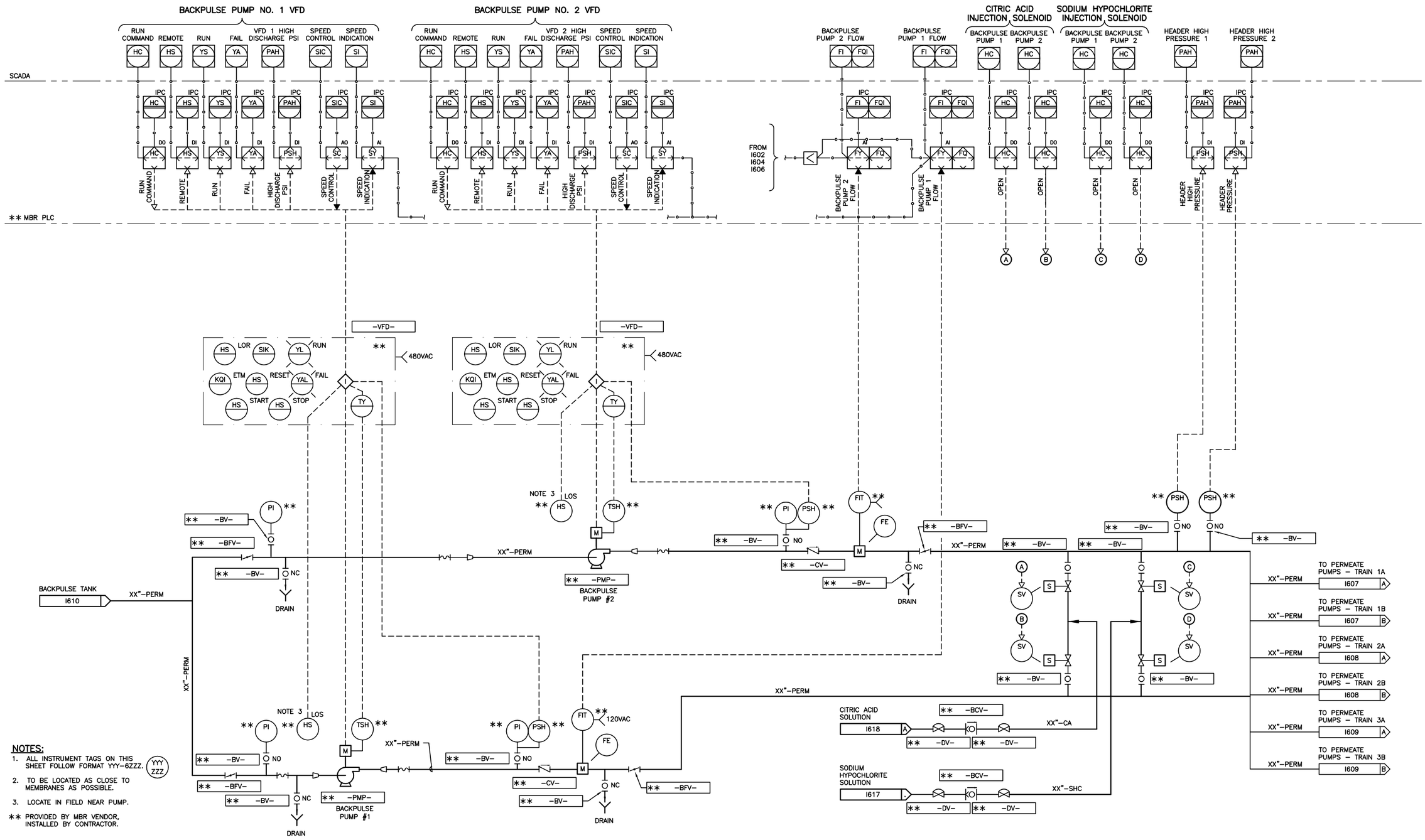

NOTES:

1. ALL INSTRUMENT TAGS ON THIS SHEET FOLLOW FORMAT YYY-6ZZZ. (YYY ZZZ)
2. TO BE LOCATED AS CLOSE TO MEMBRANES AS POSSIBLE.
3. LOCATE IN FIELD NEAR PUMP.

** PROVIDED BY MBR VENDOR, INSTALLED BY CONTRACTOR.

VICTOR VALLEY WASTEWATER RECLAMATION AUTHORITY
APPLE VALLEY WRP - PRELIMINARY DESIGN REPORT

HDR

carollo

I611

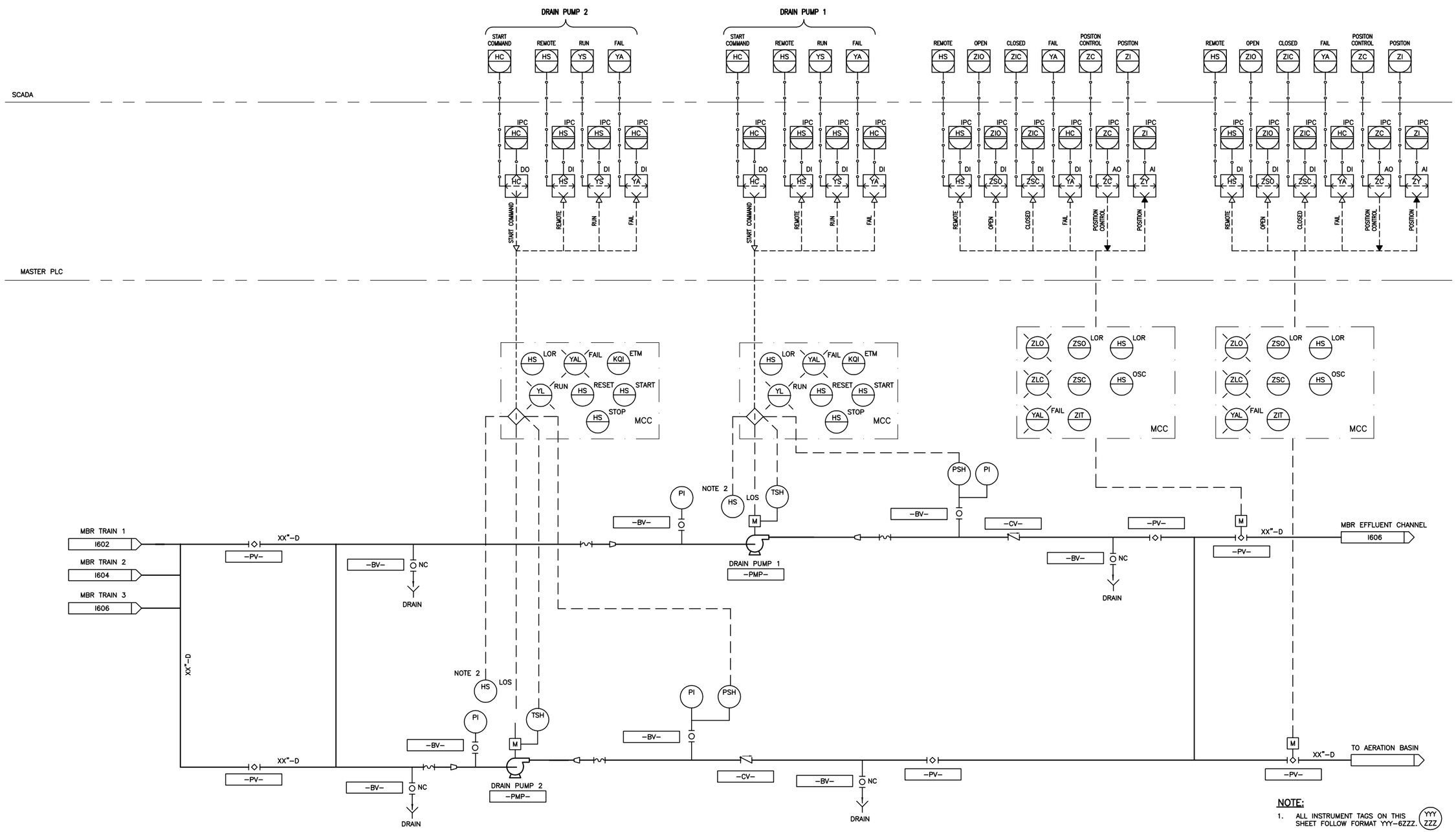

VICTOR VALLEY WASTEWATER RECLAMATION AUTHORITY
APPLE VALLEY WRP - PRELIMINARY DESIGN REPORT

HDR

carollo

I612

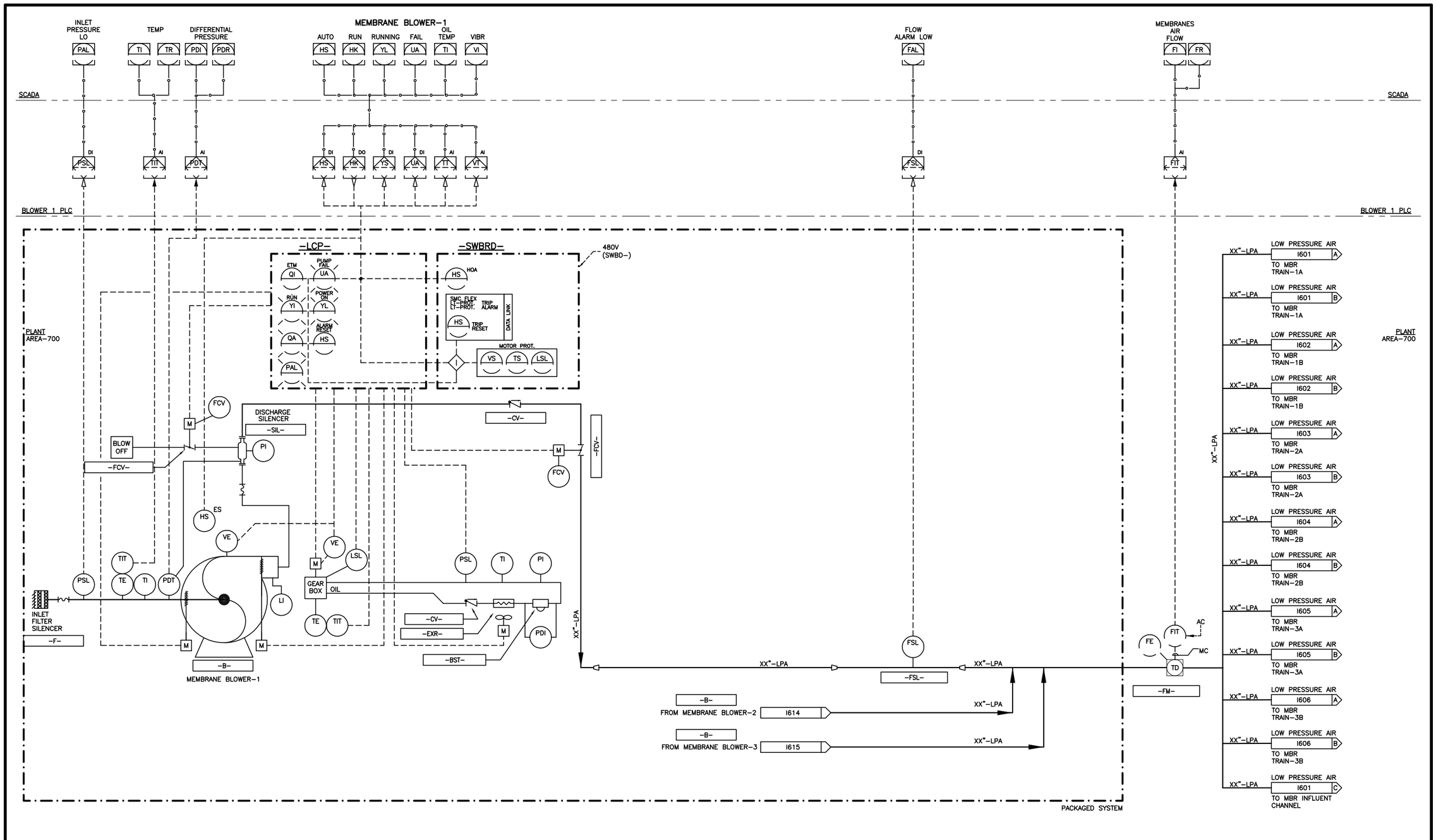

VICTOR VALLEY WASTEWATER RECLAMATION AUTHORITY
APPLE VALLEY WRP - PRELIMINARY DESIGN REPORT

HDR

carollo

I613

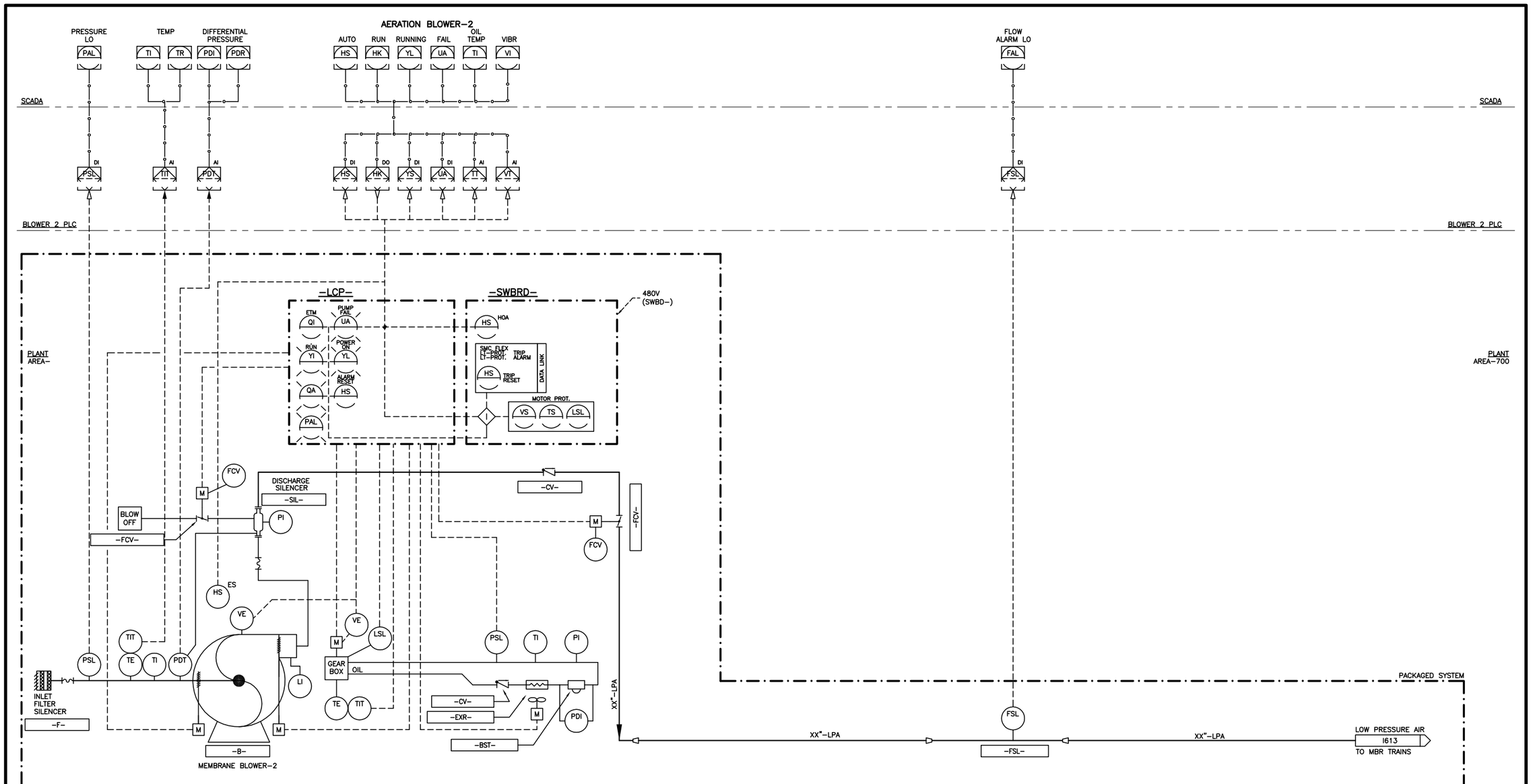

VICTOR VALLEY WASTEWATER RECLAMATION AUTHORITY
APPLE VALLEY WRP - PRELIMINARY DESIGN REPORT

HDR

carollo

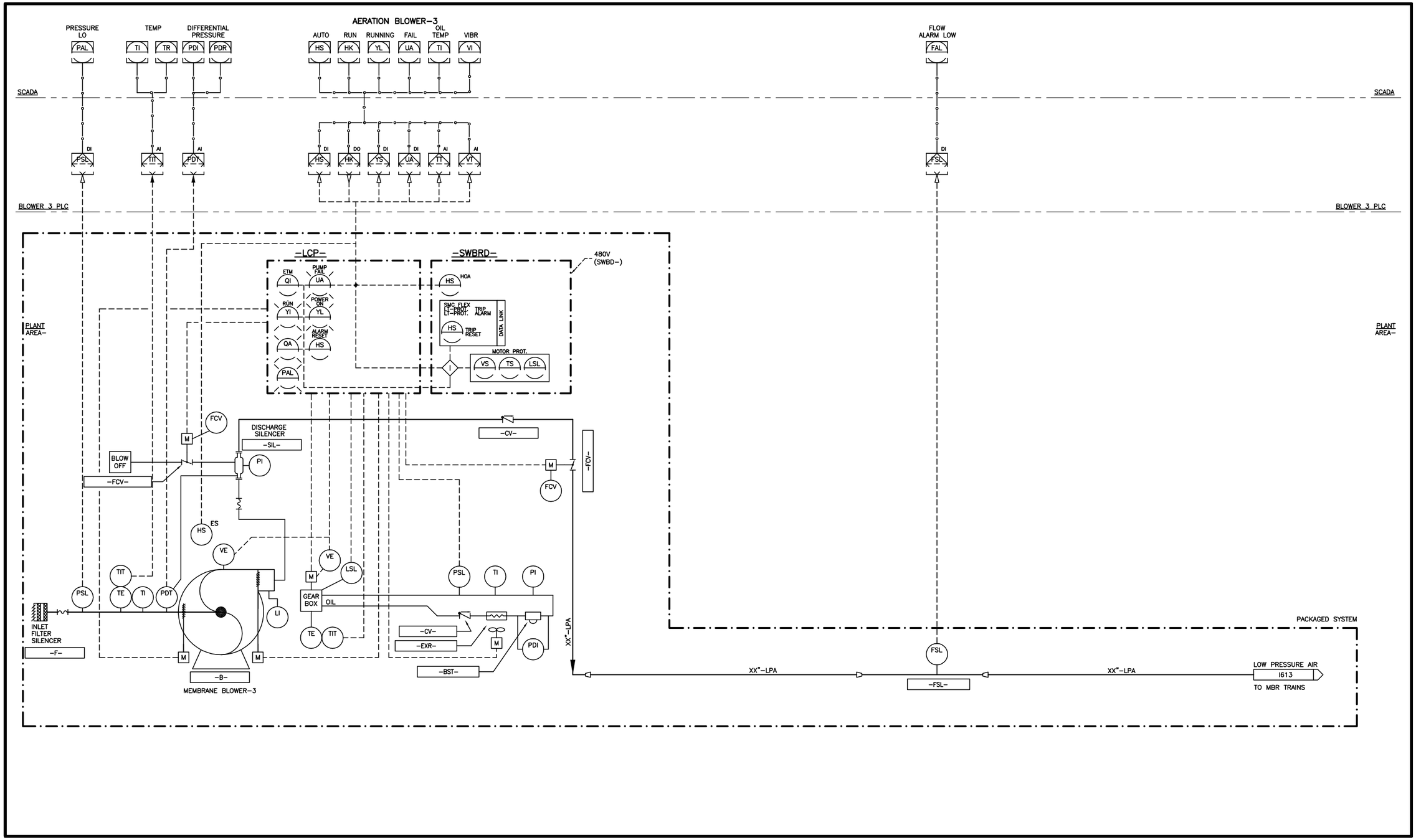

VICTOR VALLEY WASTEWATER RECLAMATION AUTHORITY
APPLE VALLEY WRP - PRELIMINARY DESIGN REPORT

HDR

carollo

I615

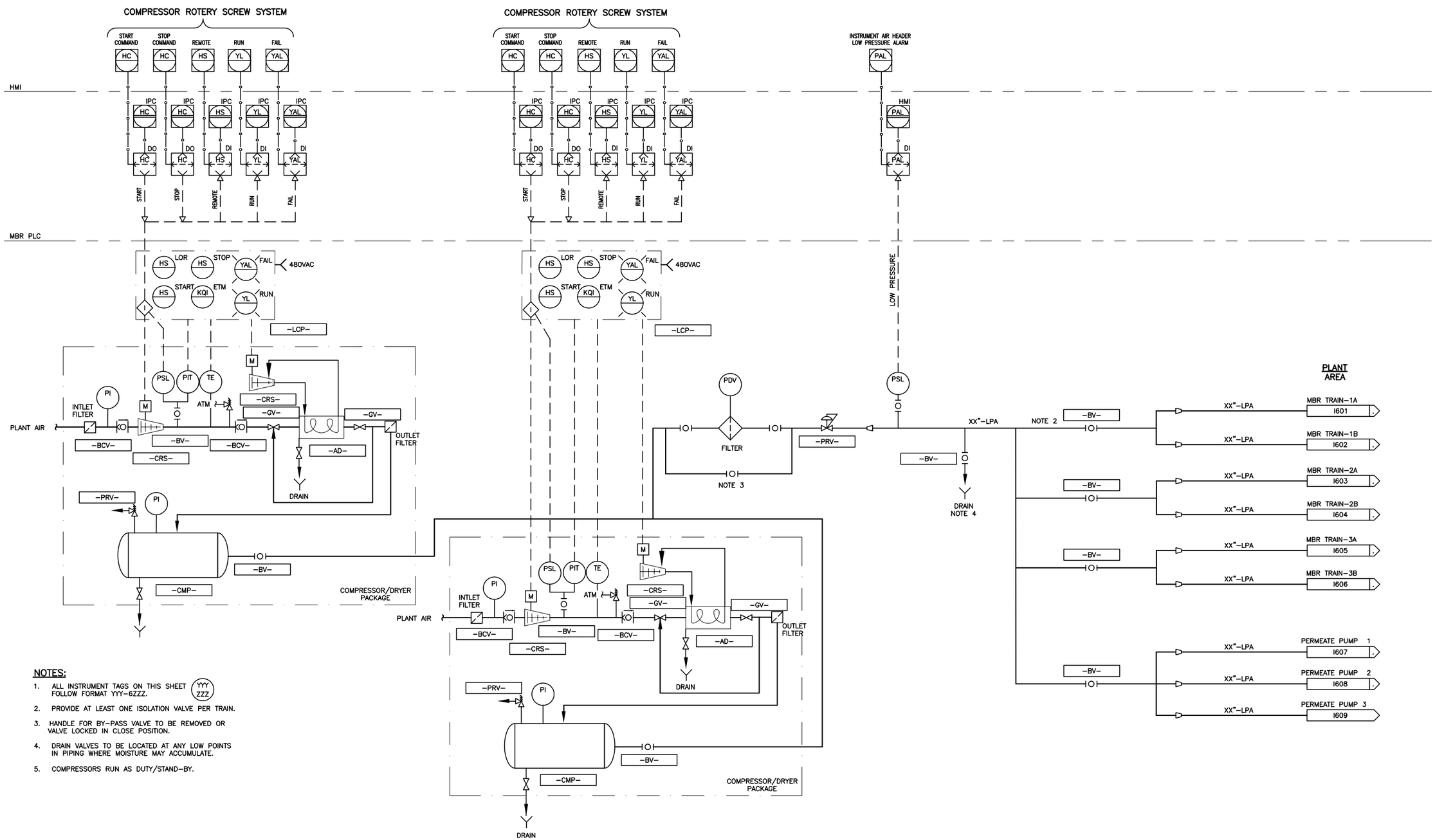

NOTES:

1. ALL INSTRUMENT TAGS ON THIS SHEET FOLLOW FORMAT YYY-6ZZZ. (YYY ZZZ)
2. PROVIDE AT LEAST ONE ISOLATION VALVE PER TRAIN.
3. HANDLE FOR BY-PASS VALVE TO BE REMOVED OR VALVE LOCKED IN CLOSE POSITION.
4. DRAIN VALVES TO BE LOCATED AT ANY LOW POINTS IN PIPING WHERE MOISTURE MAY ACCUMULATE.
5. COMPRESSORS RUN AS DUTY/STAND-BY.

VICTOR VALLEY WASTEWATER RECLAMATION AUTHORITY
APPLE VALLEY WRP - PRELIMINARY DESIGN REPORT

HDR

carollo

I616

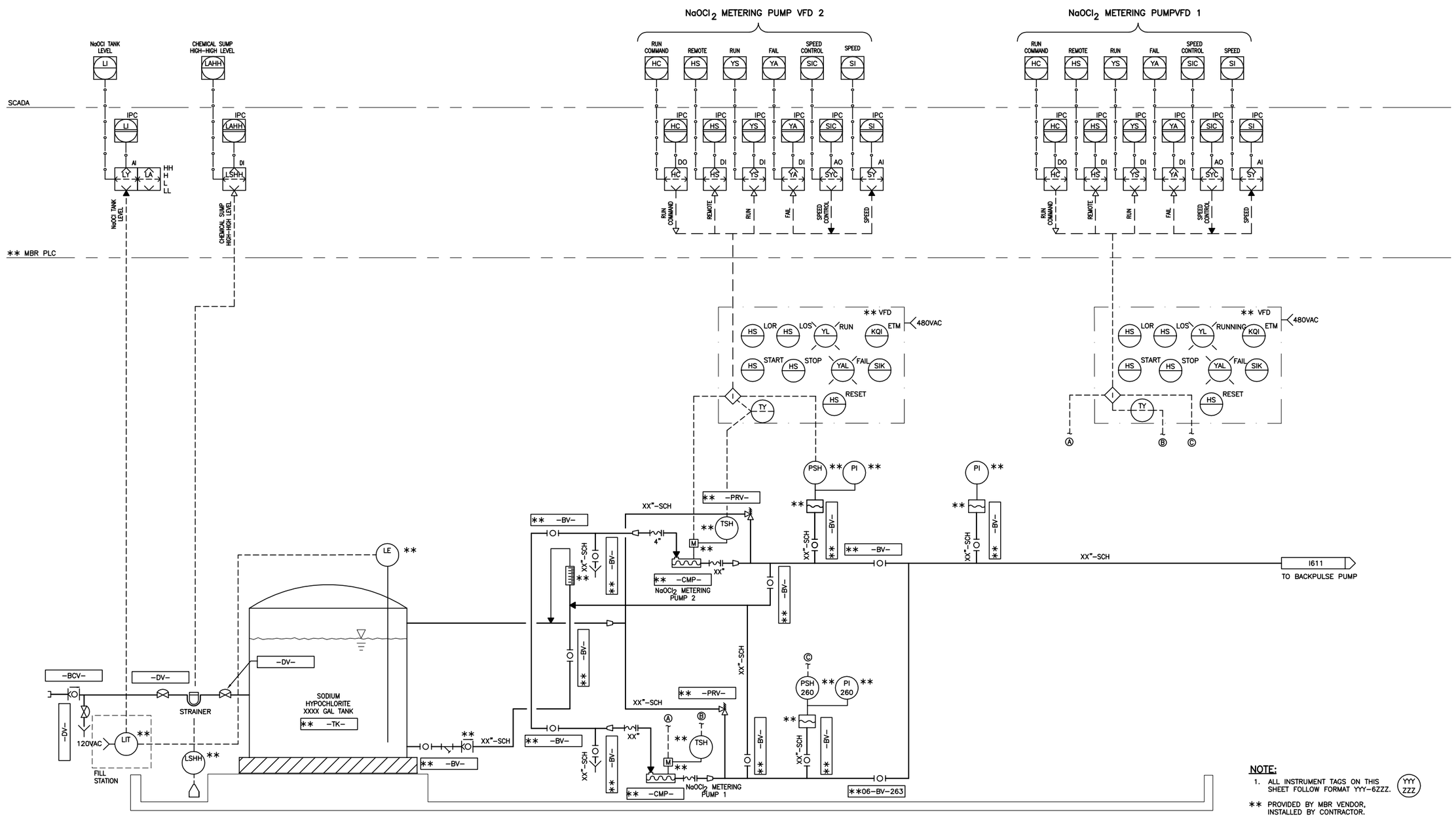

NOTE:

1. ALL INSTRUMENT TAGS ON THIS SHEET FOLLOW FORMAT YYY-6ZZZ. (YYY ZZZ)

** PROVIDED BY MBR VENDOR, INSTALLED BY CONTRACTOR.

VICTOR VALLEY WASTEWATER RECLAMATION AUTHORITY
APPLE VALLEY WRP - PRELIMINARY DESIGN REPORT

HDR

carollo

I617

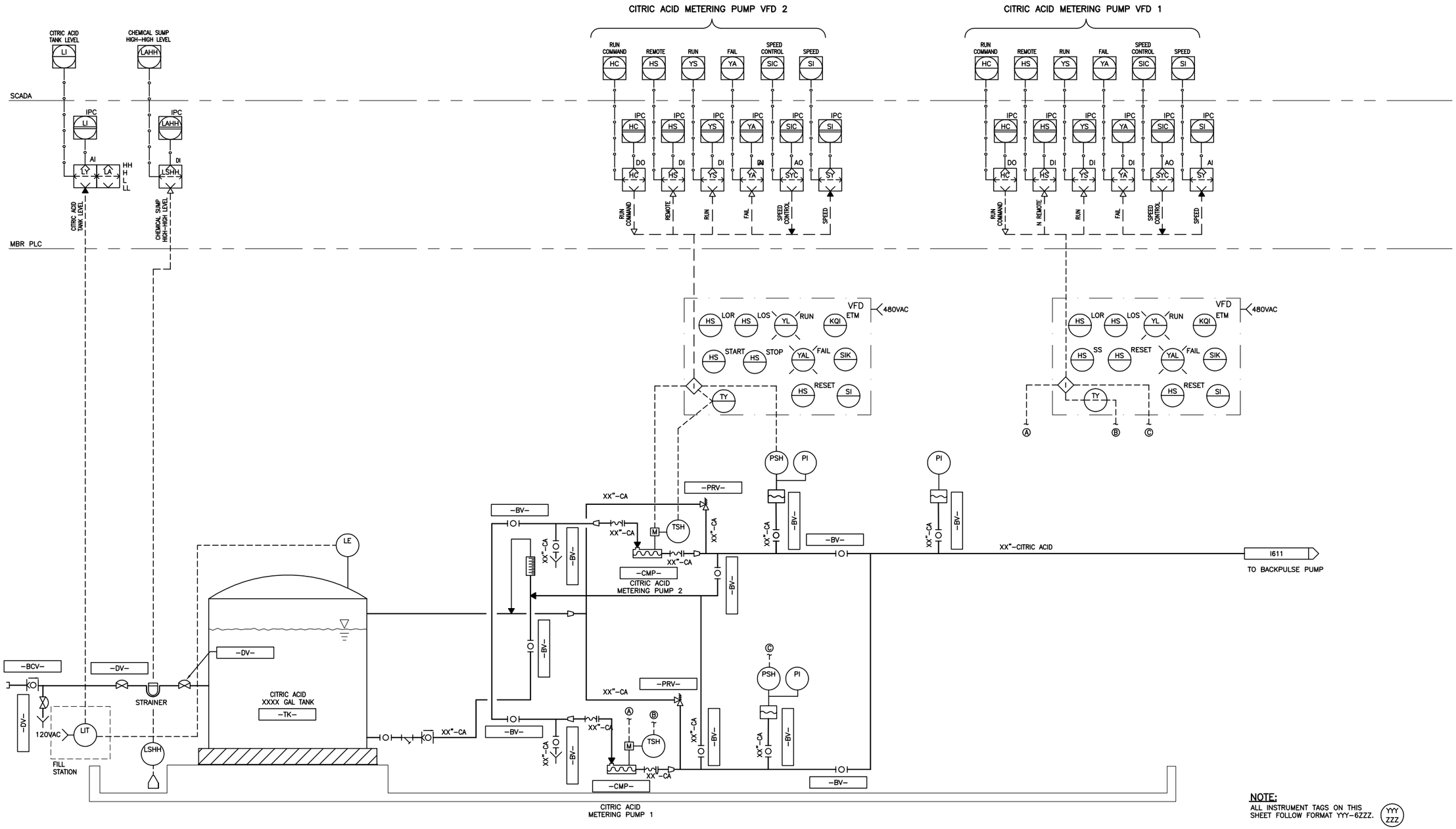

NOTE:
ALL INSTRUMENT TAGS ON THIS SHEET FOLLOW FORMAT YYY-6ZZZ.

VICTOR VALLEY WASTEWATER RECLAMATION AUTHORITY
APPLE VALLEY WRP - PRELIMINARY DESIGN REPORT

HDR

carollo

I618

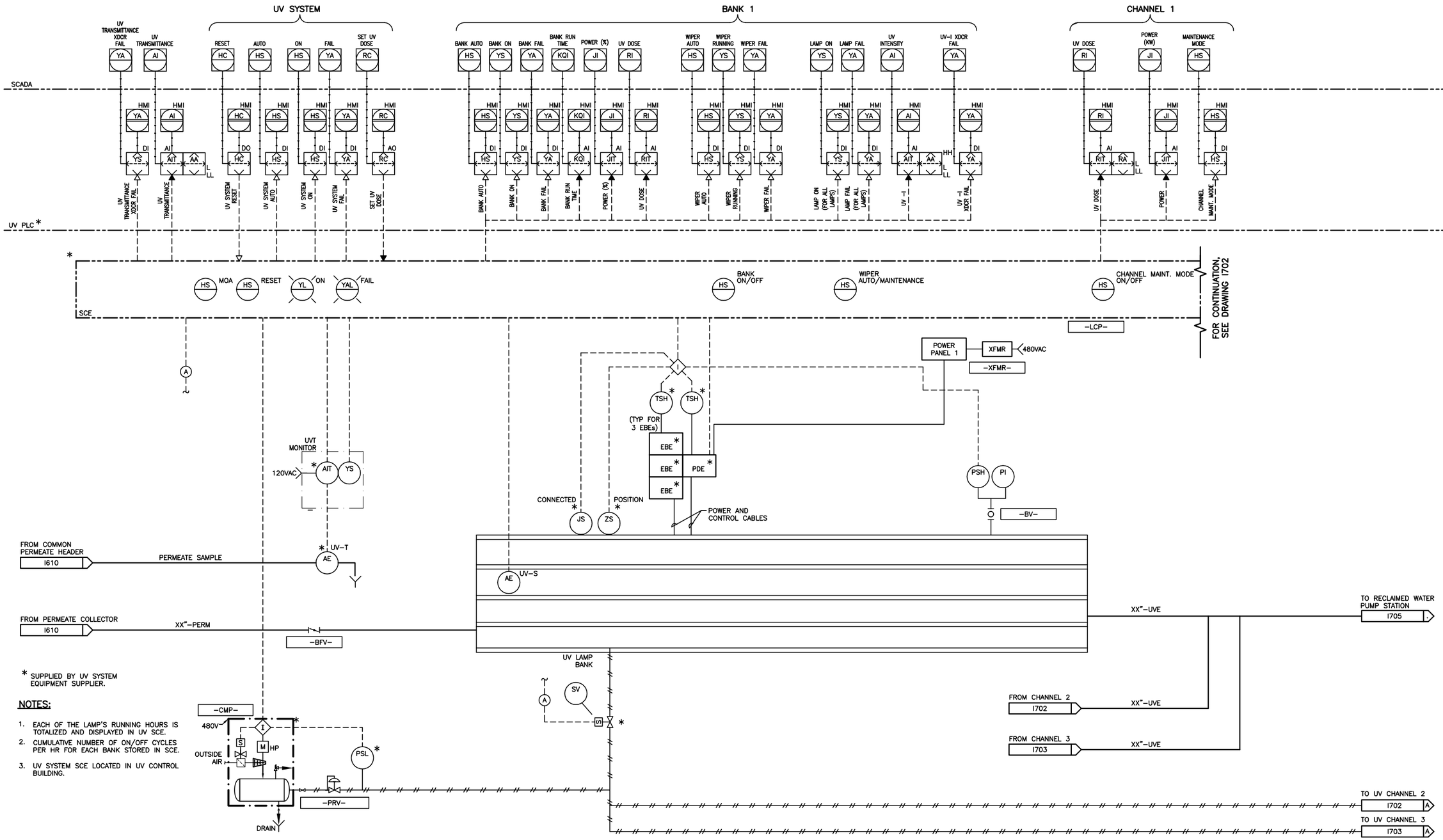

* SUPPLIED BY UV SYSTEM EQUIPMENT SUPPLIER.

NOTES:

1. EACH OF THE LAMP'S RUNNING HOURS IS TOTALIZED AND DISPLAYED IN UV SCE.
2. CUMULATIVE NUMBER OF ON/OFF CYCLES PER HR FOR EACH BANK STORED IN SCE.
3. UV SYSTEM SCE LOCATED IN UV CONTROL BUILDING.

VICTOR VALLEY WASTEWATER RECLAMATION AUTHORITY
APPLE VALLEY WRP - PRELIMINARY DESIGN REPORT

HDR

carollo

I701

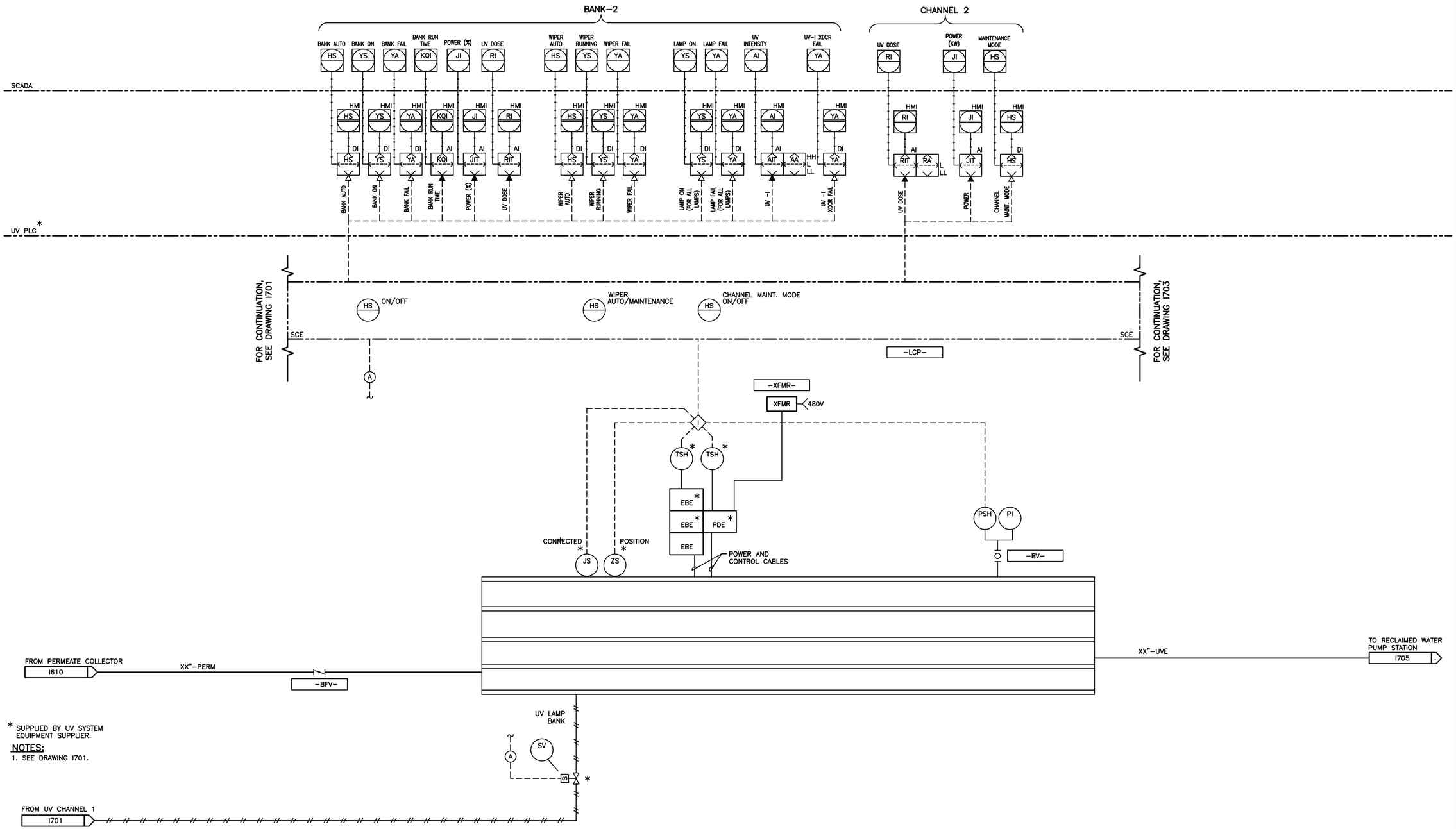

* SUPPLIED BY UV SYSTEM EQUIPMENT SUPPLIER.

NOTES:

1. SEE DRAWING 1701.

VICTOR VALLEY WASTEWATER RECLAMATION AUTHORITY
APPLE VALLEY WRP - PRELIMINARY DESIGN REPORT

HDR

carollo

I702

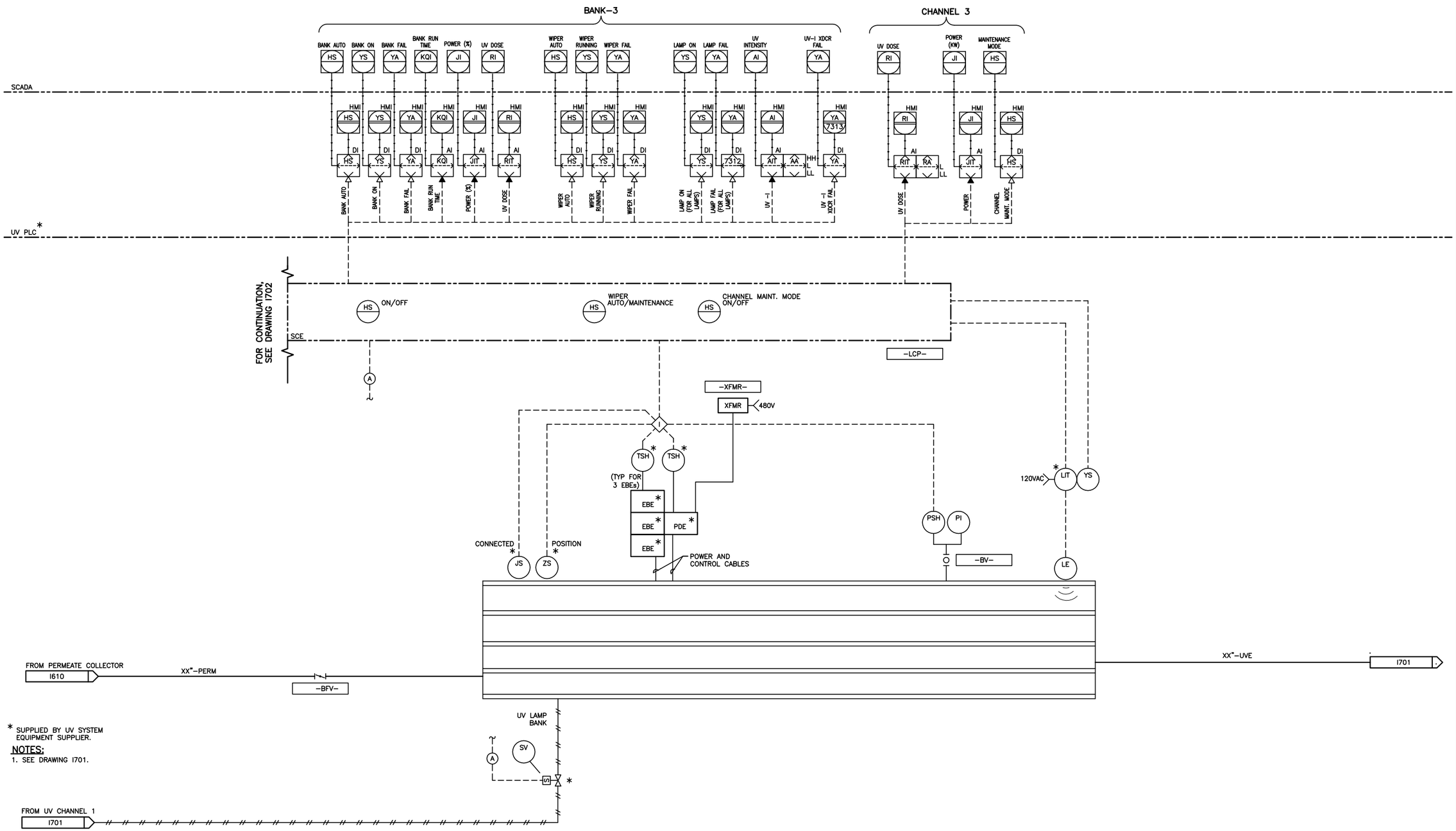

* SUPPLIED BY UV SYSTEM EQUIPMENT SUPPLIER.

NOTES:

1. SEE DRAWING I701.

VICTOR VALLEY WASTEWATER RECLAMATION AUTHORITY
APPLE VALLEY WRP - PRELIMINARY DESIGN REPORT

HDR

carollo

I703

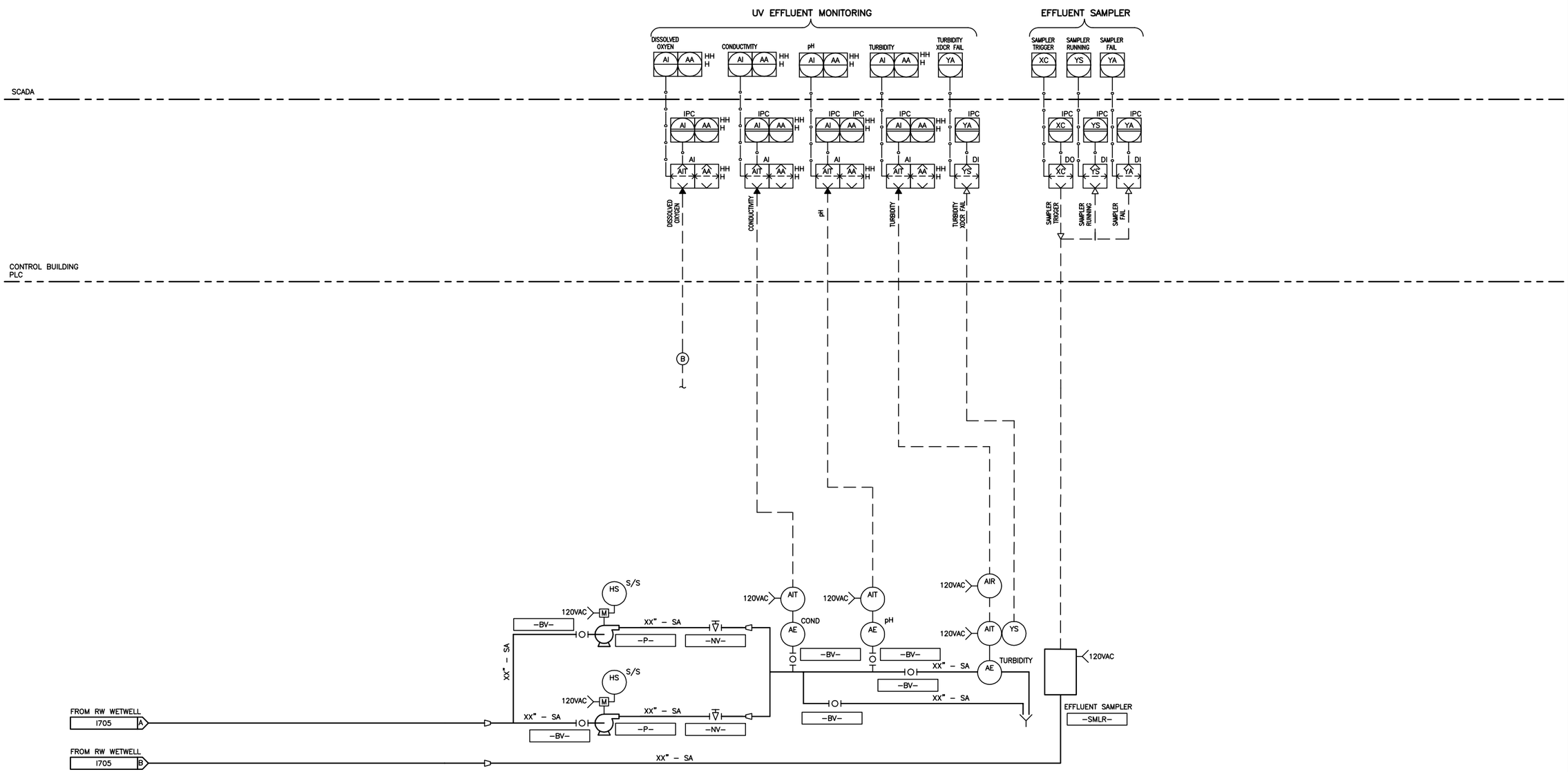

VICTOR VALLEY WASTEWATER RECLAMATION AUTHORITY
APPLE VALLEY WRP - PRELIMINARY DESIGN REPORT

HDR

carollo

I704

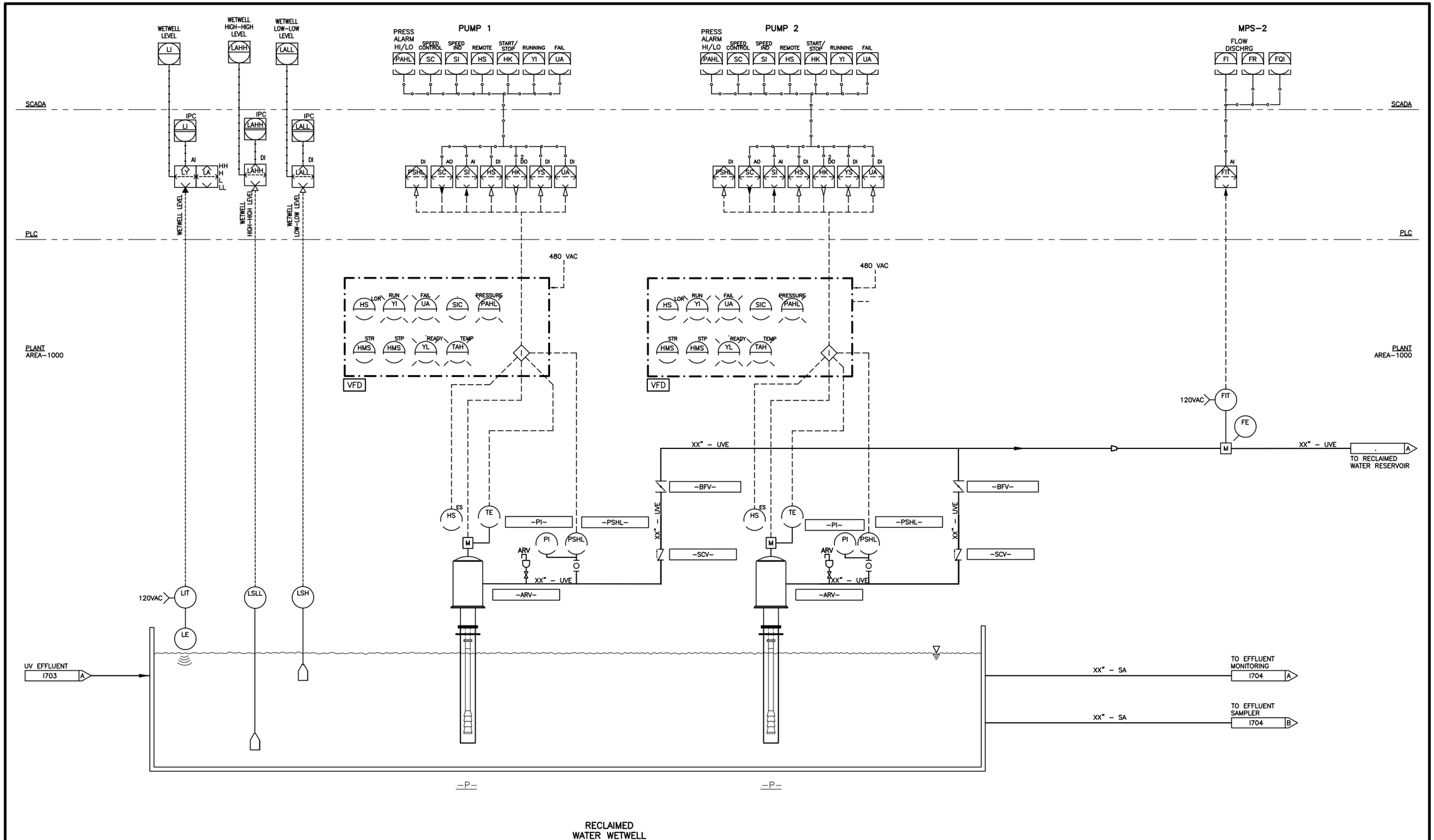

VICTOR VALLEY WASTEWATER RECLAMATION AUTHORITY
APPLE VALLEY WRP - PRELIMINARY DESIGN REPORT

HDR

carollo

I705

DESIGN INFORMATION MEMORANDUM NO. 13B

SITE LAYOUT AND CONSTRAINTS

Project Name:	Hesperia and Apple Valley Scalping WRPs, Raw Sewage Lift Station and Force Mains		
Client:	Victor Valley Wastewater Reclamation Authority	**Date:**	December 2009

INTRODUCTION

This DIM-13B discussed the selected Apple Valley WRP site location and physical constraints as geotechnical and seismic constraints.

Site Layout

The Apple Valley WRP will be located on the north side of Otoe Road, just east of Quantico Road, as shown in Figure 13B.1. The WRP site is adjacent to the existing Otoe Road Lift Station and this lift station will be configured into the WRP site.

The WRP site layout has been developed with the following goals:

- Low profile
- Maintain frontage area set by the Otoe Road Lift Station;
- A monolithic or uniform structure concept to reduce footprint;
- Incorporate the existing Otoe Road Lift Station into the WRP site; and
- Common wall construction to reduce costs.
- Reduce noise impacts on the neighboring community.
- Leave space north of the facility for future expansion.

The proposed site layout is presented in Figure 13B.1. Sections of the proposed WRP are presented in Figure 13B.2 and 13B.3.

Site Constraints

Seismicity and Geologic Hazards

An initial review of readily available geological maps suggests that there are no known active faults underlying the project sites. The San Andreas Fault is approximately 20 miles southeast of Apple Valley. Other faults such as the Helendale, North Frontal, and Mirage Valley are significantly closer; but may be dormant and pose a smaller risk. Whatever distant fault sources are identified in the final geotechnical report, it is clear that the subject sites for this project are in seismically active areas for which strong ground motions must be considered. Based on available geotechnical borings that were placed for a prior project near the Apple Valley WRP site, the final geotechnical report will likely confirm that soils in that area are in Seismic Class C or D, and design ground accelerations will be on the order of 0.30 g. Soils in this category should allow the use of conventional concrete wall, column, and mat foundations. Since the soils are predominantly sands, gravel, and weak caliche, it is also suspected that seismic

liquefaction, expansive soils, and soil corrosivity will not be major design considerations; but all such factors must be detailed for both sites by the geotechnical consultant.

Design Codes

Seismic and other design loads for the Project will be as specified in the 2007 California Building Code (CBC), which is based on the 2006 International Building Code (IBC). These industry standards also rely extensively on “Minimum Design Loads for Buildings and Other Structures” in American Society of Civil Engineers (ASCE) 7-05. Exceptions (to IBC & ASCE) outlined in the CBC, and in specifications by local municipalities or other jurisdictions, will also be researched and implemented.

Structural Systems

Available model extractions suggest that concrete foundation walls for basins will extend approximately 20 feet deep and will be 16 to 20 inches thick. The foundation mat beneath the walls will be approximately 18 to 22 inches thick. Walkway slabs will be 12 inches thick and span over the basins near ground level. Foundation walls for enclosed pump buildings will extend approximately 20 feet below ground and will be 12 to 16 inches thick. The first floor slab (near ground level) will be 12 inches thick, ribbed with concrete beams, which in turn are supported by the perimeter foundation walls.

Perimeter bearing walls above the first floor will be 12 inches thick, reinforced masonry. At least one interior CMU wall on the first floor would be required to transmit roof lateral loads (wind and seismic) to the first floor slab diaphragm.

The roofs for enclosed buildings will be supported by steel beams approximately 10 feet apart, sloping between the masonry bearing walls. The roof deck will be 3-inch deep corrugated steel spanning 10 feet between support beams. The exposed roof surface will be standing seam metal deck, supported by the 3-inch deck underlayment. Rigid insulation will be sandwiched between both decks.

Topography

The selected WRP site is generally flat and conducive to the proposed use. No additional site work or excavation is anticipated beyond the requirements to construct the WRP as planned. A detailed topographic survey is currently being developed.

Noise Control

Noise attenuation needs to consider the three elements of noise: source, transmission path, and noise receiver. The impact of background noise, including existing environmental, transportation, and community noise sources in the absence of any audible construction activities, must also be considered. For the Apple Valley WRP, noise reduction will be accomplished by reduction at the source to practical limits.

Noise reduction at the source is dependent on the type of unit process or equipment in question. For typical equipment at wastewater treatment facilities, several options are available. The most effective solution is to enclose the equipment in some type of building or other enclosure. Sound attenuation panels can be provided on walls and/or ceilings of buildings or structures. For extremely high noise generating equipment or equipment located outside buildings or enclosures, manufactured noise suppression appurtenances can also be provided.

Considering public acceptance, a number of measures will be taken to provide noise attenuation for the Apple Valley WRP. The proposed noise control features for the major process equipment are listed below:

- Pumps: Pumps at the Apple Valley WRP include submersible pumps and motors (i.e., MBR feed forward pumps, WAS pumps) located in below-grade wet-well, dry-pit pumps (i.e., membrane permeate pumps) housed in building basement, and exposed pumps (effluent vertical turbine pumps) with motors at grade level. Noise attenuation will be accomplished by providing motor shrouds and/or increased level of motor insulation. For exposed pumps, some type of sound attenuation wall may be constructed if necessary.
- Mixers and Drives: Mixers and drives (i.e., on top of aeration basins, etc.) can also be provided with motor shrouds and/or increased level of motor insulation.
- Blowers: Blowers at the Apple Valley WRP will be enclosed in building basement, with interior acoustical treatment on walls and ceiling. If necessary, each blower can be provided with individual enclosure to reduce noise level within the building.

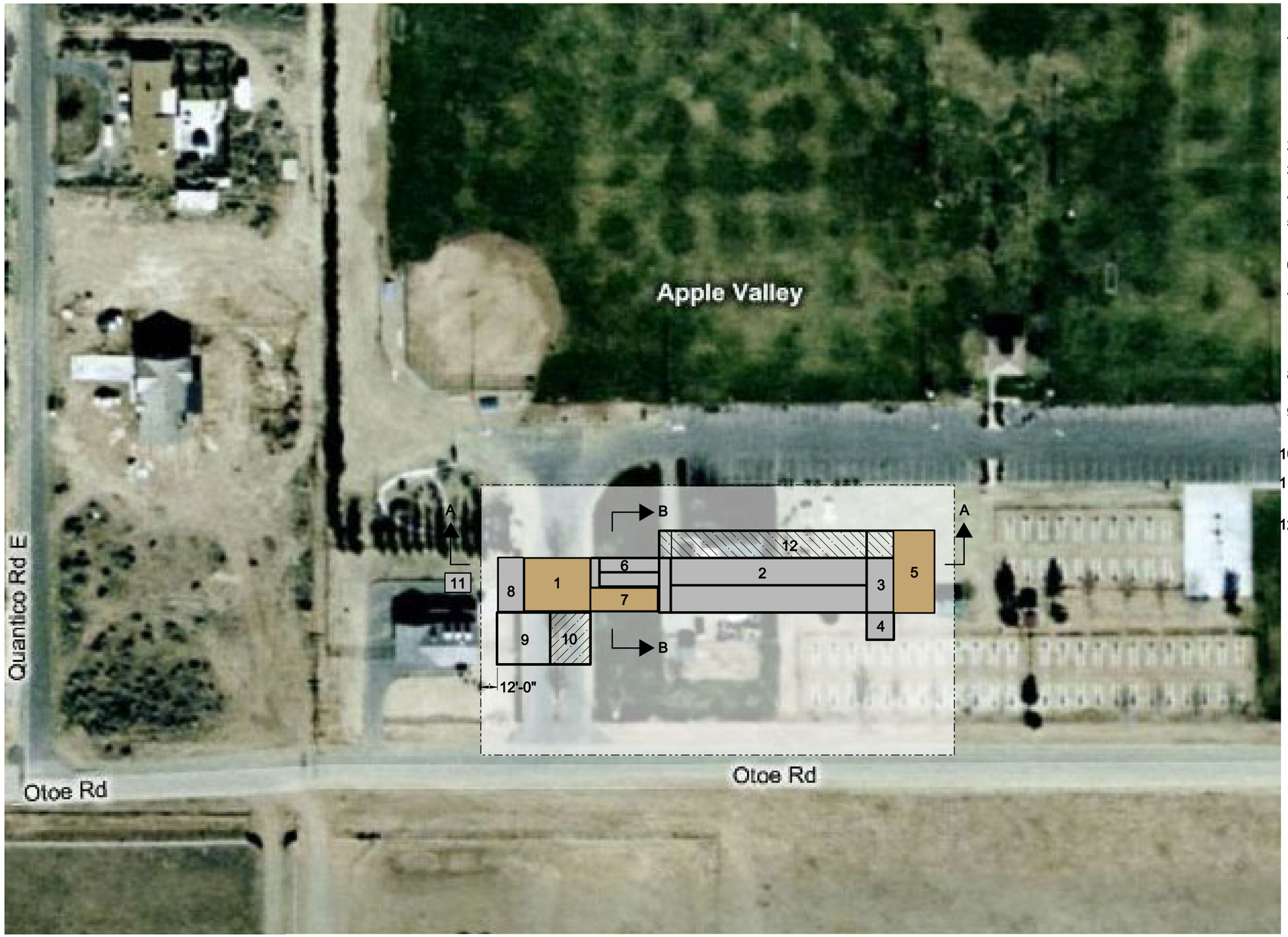

LEGEND

1. HEADWORKS/ MBR FACILITY BUILDING.
   FLOOR LEVEL: INFLUENT SCREENS, CITRIC ACID/ SODIUM HYPO STORAGE & FEED.
   LOWER LEVEL: UV SYSTEM & PERMEATE PUMPS
2. BIOLOGICAL BASIN
3. FEED FORWARD PUMP STATION
4. WAS PUMP STATION
5. PROCESS ELECTRICAL/ BLOWER BUILDING
6. SUBMERGED MEMBRANES
7. MBR ELECTRICAL/ BLOWER BUILDING
   FLOOR LEVEL: ELECTRICAL ROOM
   LOWER LEVEL: MEMBRANE AIR SCOUR BLOWERS
8. RECLAIMED WATER PUMP STATION
9. BIOFILTER (HEADWORKS ODOR CONTROL)
10. GRIT REMOVAL (FUTURE)
11. INFLUENT LIFT STATION EXPANSION
12. AERATION BASIN PHASE 2 EXPANSION (2 MGD)

NORTH

VICTOR VALLEY WASTEWATER RECLAMATION AUTHORITY
APPLE VALLEY WRP - PRELIMINARY DESIGN REPORT

HDR

carollo

SITE LAYOUT

FIGURE 13B.1

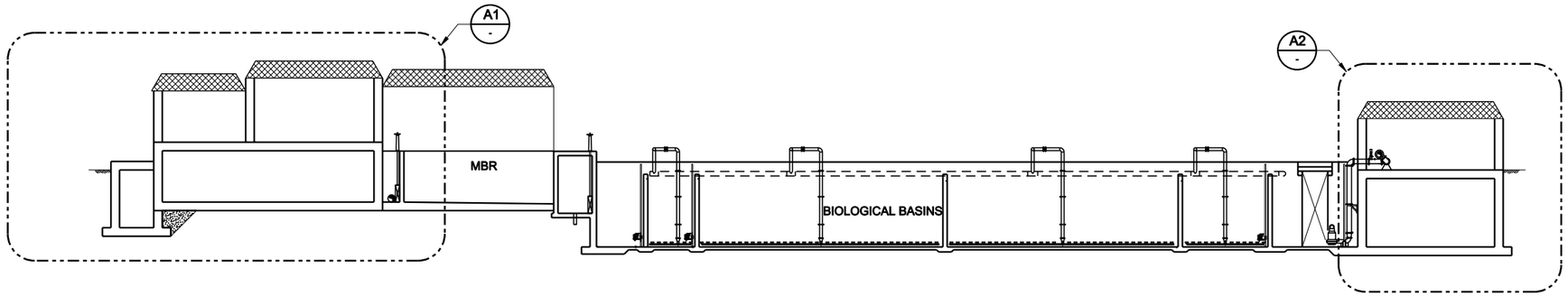

A - SECTION
SCALE: 1/16" = 1'-0"
FILE: 8229A00-SM-0100.dgn
0 2' 4' 6' 12'

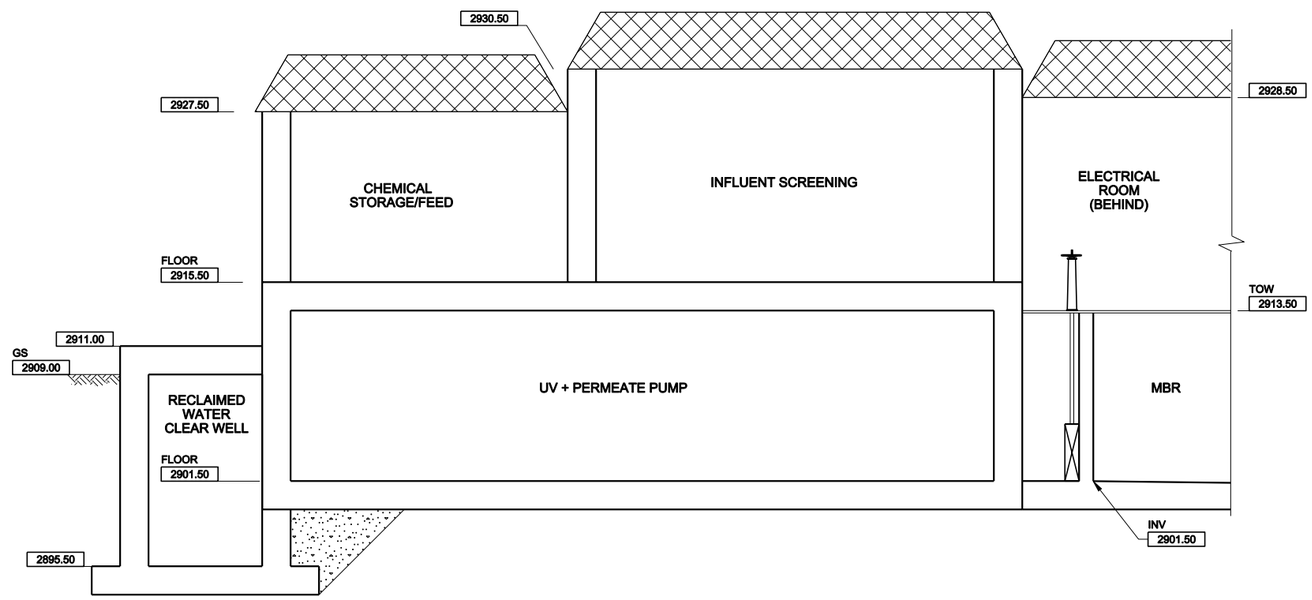

A1 - SECTION
SCALE: 3/16" = 1'-0"
FILE: 8229A00-SM-0100.dgn
0 2' 4' 6' 12'

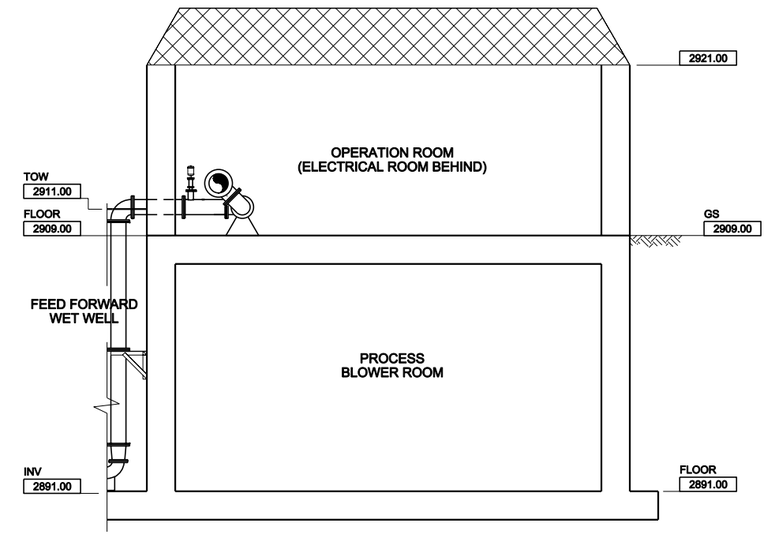

A2 - SECTION
SCALE: 3/16" = 1'-0"
FILE: 8229A00-SM-0100.dgn
0 2' 4' 6' 12'

VICTOR VALLEY WASTEWATER RECLAMATION AUTHORITY
APPLE VALLEY WRP - PRELIMINARY DESIGN REPORT

HDR

carollo

PLANT - SECTION A

FIG 13B.2

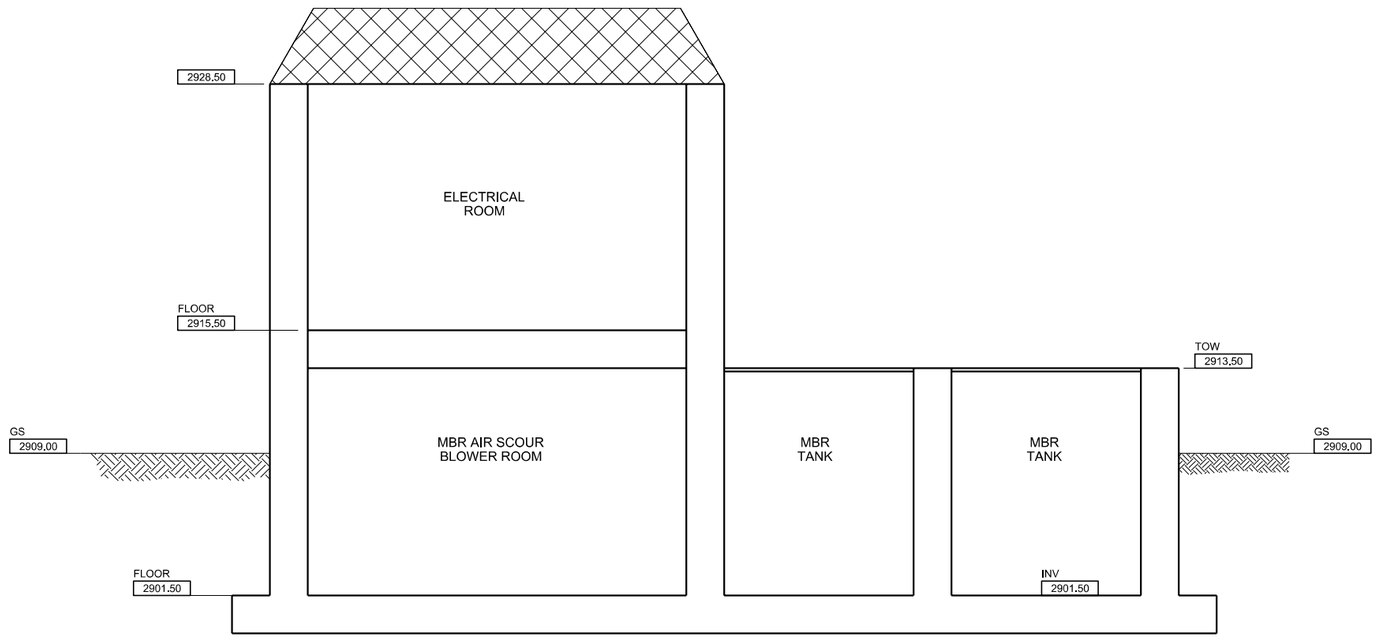

B - **SECTION**

SCALE: 1/4" = 1'-0"
FILE: 8229A00-S-09-300.dgn

0 2' 4' 8'

VICTOR VALLEY WASTEWATER RECLAMATION AUTHORITY
APPLE VALLEY WRP - PRELIMINARY DESIGN REPORT

HDR

carollo

PLANT - SECTION B

FIG 13B.3

APPENDIX 2

Final

PRELIMINARY DESIGN REPORT

City of Hesperia WRP

December 2009

carollo
Engineers...Working Wonders With Water™

in association with HDR

VICTOR VALLEY WASTEWATER RECLAMATION AUTHORITY

HESPERIA AND APPLE VALLEY WATER RECLAMATION PLANTS

CITY OF HESPERIA WRP

PRELIMINARY DESIGN REPORT

FINAL

December 2009

REGISTERED PROFESSIONAL ENGINEER
JAMES H. HAGSTROM
No. C50890
Exp. 09/30/11
CIVIL
STATE OF CALIFORNIA

REGISTERED PROFESSIONAL ENGINEER
ANDREW C. GILMORE
No. C66158
Exp. 06/30/10
CIVIL
STATE OF CALIFORNIA

The undersigned has approved this document for and on behalf of Carollo Engineers, P.C.

Partner

3033 NORTH 44TH STREET, SUITE 101 • PHOENIX, ARIZONA 85018 • (602) 263-9500 • FAX (602) 265-1422

pw://Carollo/Documents/Client/CA/VVWRA/8229A00/Deliverables/PDR_ESA.doc (Final)

Victor Valley Wastewater Reclamation Authority

CITY OF HESPERIA WRP

PRELIMINARY DESIGN REPORT

TABLE OF CONTENTS

Page No.

1.0 INTRODUCTION 1

2.0 BACKGROUND 1

3.0 TREATMENT PROCESS 3

4.0 BASIS OF DESIGN 8

5.0 PROJECT COSTS AND SCHEDULE 11
- 5.1 Project Costs 11
- 5.2 Project Schedule 14

LIST OF APPENDICES

DIM No. 1A	Design Flows and Loadings
DIM No. 2A	Plant Hydraulics
DIM No. 3A	Process Modeling
DIM No. 4A	Permitting and Effluent Disposal (forthcoming)
DIM No. 5A	Preliminary Treatment
DIM No. 6A	Secondary Treatment
DIM No. 7A	Disinfection
DIM No. 8A	Reclaimed Water Pump Station
DIM No. 9A	Residuals Handling and Disposal
DIM No. 10A	Site Aesthetics
DIM No. 11A	Electrical Power and Distribution (forthcoming)
DIM No. 12A	Instrumentation and Controls (forthcoming)
DIM No. 13A	Site Layout and Constraints

LIST OF TABLES

Table ESA.1 Design Criteria 8
Table ESA.2 AACEI Cost Estimate Classification Matrix for Process Industries 12
Table ESA.3 Opinion of Probable Construction Costs 13
Table ESA.4 Project Schedule 14

LIST OF FIGURES

Figure ES-1A Site Layout 2
Figure ES-2A Process Flow Diagram 4
Figure ES-3A Conceptual Architectural Section 5
Figure ES-4A Plant - Section A 6
Figure ES-5A Plant - Section B 7

1.0 INTRODUCTION

The Victor Valley Wastewater Reclamation Authority (VVWRA) in collaboration with its member agencies, City of Hesperia (Hesperia) and Town of Apple Valley (Apple Valley) has developed a strategic goal of locating subregional Water Reclamation Plants (WRPs) to augment reclaimed water capabilities. These subregional WRPs will be located in Hesperia and Apple Valley and these facilities are the focus of this preliminary design effort.

In order to report the results and conclusions of the preliminary design effort, a series of Design Information Memoranda (DIMs or individually as DIM) were developed. The DIMs, in their entirety, are included under separate tabs within this Preliminary Design Report (PDR). The DIMs discussed in this PDR are as follows.

- DIM No. 1A - Design Flows and Loadings
- DIM No. 2A - Plant Hydraulics
- DIM No. 3A - Process Modeling
- DIM No. 4A - Permitting and Effluent Disposal (forthcoming)
- DIM No. 5A - Preliminary Treatment
- DIM No. 6A - Secondary Treatment
- DIM No. 7A - Disinfection
- DIM No. 8A - Reclaimed Water Pump Station
- DIM No. 9A - Residuals Handling and Disposal
- DIM No. 10A - Site Aesthetics
- DIM No. 11A - Electrical Power and Distribution (forthcoming)
- DIM No. 12A - Instrumentation and Controls (forthcoming)
- DIM No. 13A - Site Layout and Constraints

2.0 BACKGROUND

VVWRA has decided to design and construct scalping plants within the overall wastewater collection system in order to reuse water closer to the end users. The first two scalping plants to be developed under this overall reuse goal are the Hesperia and Apple Valley Water Reclamation Plants (WRP or plural as WRPs). The WRPs will serve as scalping plants in order to deliver a fairly consistent reclaimed water production of 1.0 million gallons per day (mgd). Both WRPs will be designed for expansion to 2.0 mgd, while the Hesperia WRP may be expanded in the future up to 4.0 mgd. The Hesperia WRP will be located on the north side of Mojave Street, just west of Tamarisk Avenue, as shown in Figure ESA-1.

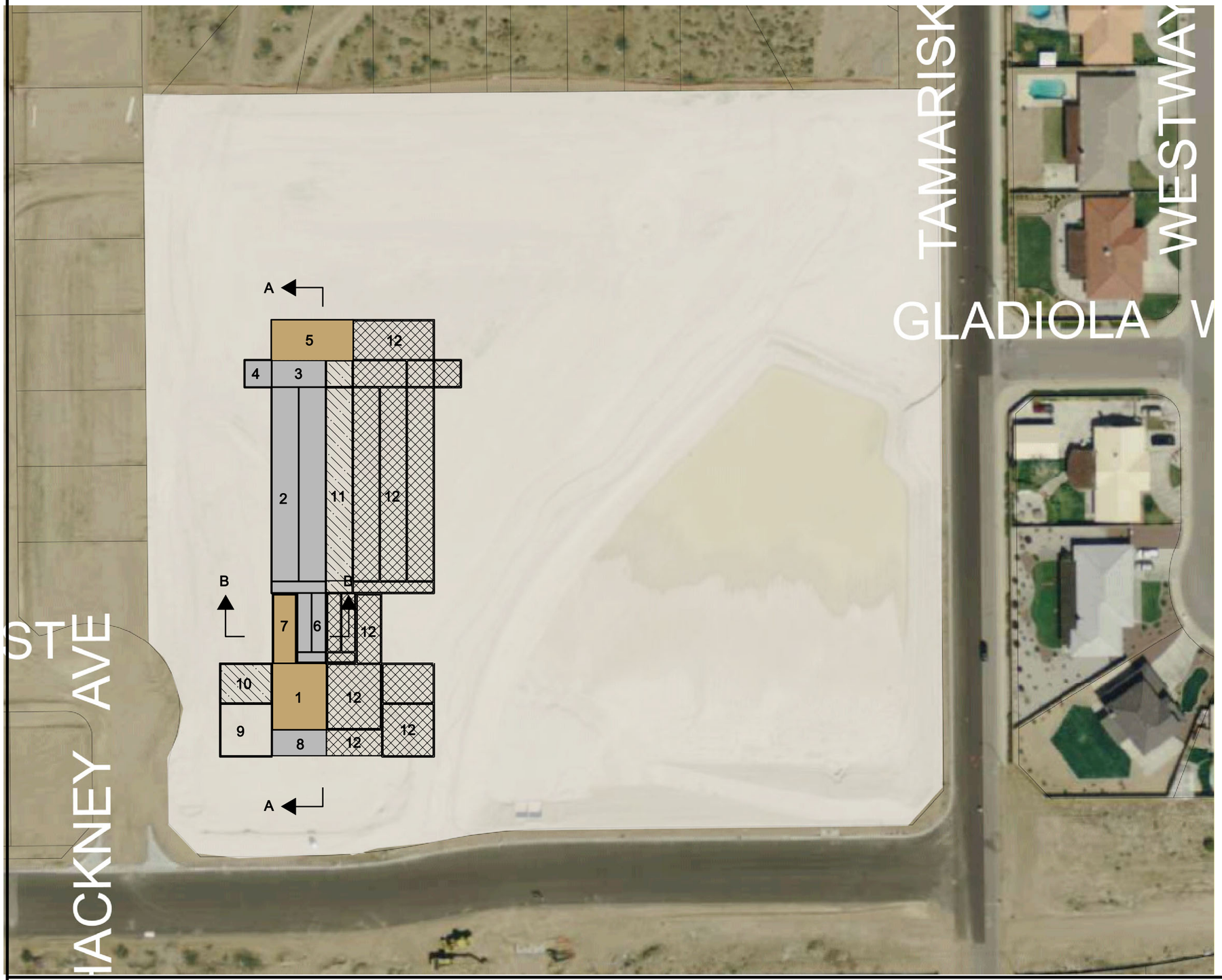

LEGEND

1. HEADWORKS/ MBR FACILITY BUILDING.
   FLOOR LEVEL: INFLUENT SCREENS, CITRIC ACID/ SODIUM HYPO STORAGE & FEED.
   LOWER LEVEL: UV SYSTEM & PERMEATE PUMPS
2. BIOLOGICAL BASIN
3. FEED FORWARD PUMP STATION
4. WAS PUMP STATION
5. PROCESS ELECTRICAL/ BLOWER BUILDING
6. SUBMERGED MEMBRANES
7. MBR ELECTRICAL/ BLOWER BUILDING
   FLOOR LEVEL: ELECTRICAL ROOM
   LOWER LEVEL: MEMBRANE AIR SCOUR BLOWERS
8. RECLAIMED WATER PUMP STATION
9. BIOFILTER (HEADWORKS ODOR CONTROL)
10. GRIT REMOVAL (FUTURE)
11. AERATION BASIN PHASE 2 EXPANSION (2 MGD)
12. PHASE 3 EXPANSION (4 MGD)

NORTH

VICTOR VALLEY WASTEWATER RECLAMATION AUTHORITY
HESPERIA WRP - PRELIMINARY DESIGN REPORT

HDR

carollo

SITE LAYOUT

FIGURE ESA.1

This PDR focuses on the Hesperia PDR with the Apple Valley PDR and the Hesperia Lift Station and Force Main under separate covers.

3.0 TREATMENT PROCESS

The overall process selected for this project is the Membrane Bioreactor approach to treating wastewater and the WRP will be configured as a scalping plant (producing the design flows at all times) designed to meet the Title 22 requirements for reclaimed water. The reclaimed water will be delivered to off-site percolation basins and used for on-site process and site irrigation. The Hesperia WRP will be comprised of the following:

- Influent lift station (discussed in a separate PDR).
- Influent force main (discussed in a separate PDR).
- Screening - 2 mm rotary drum screens.
- Activated sludge process - biological process with flexibility to meet future nitrogen regulations of less then 5 mg/L.
- Membrane filtration - submerged hollow fiber membrane filtration system.
- Ultraviolet disinfection - using low pressure high output closed vessel technology to reduce overall energy consumption.
- Reclaimed water pump station - Deliver water for off-site and on-site uses.
- Waste activated sludge - Pumped to downstream section of adjacent collection system.
- Headworks odor control - In ground non-proprietary biofilter for treating of foul air from the screening area.

A monolithic type of an arrangement was chosen for this project to encourage common wall construction and promote a low visual profile. Conceptual architectural elevations are provided in Figure ESA-3 and sections of the proposed WRP are provided as Figures ESA-4 and ESA-5. The details of the treatment process are provided in the DIMs within this PDR.

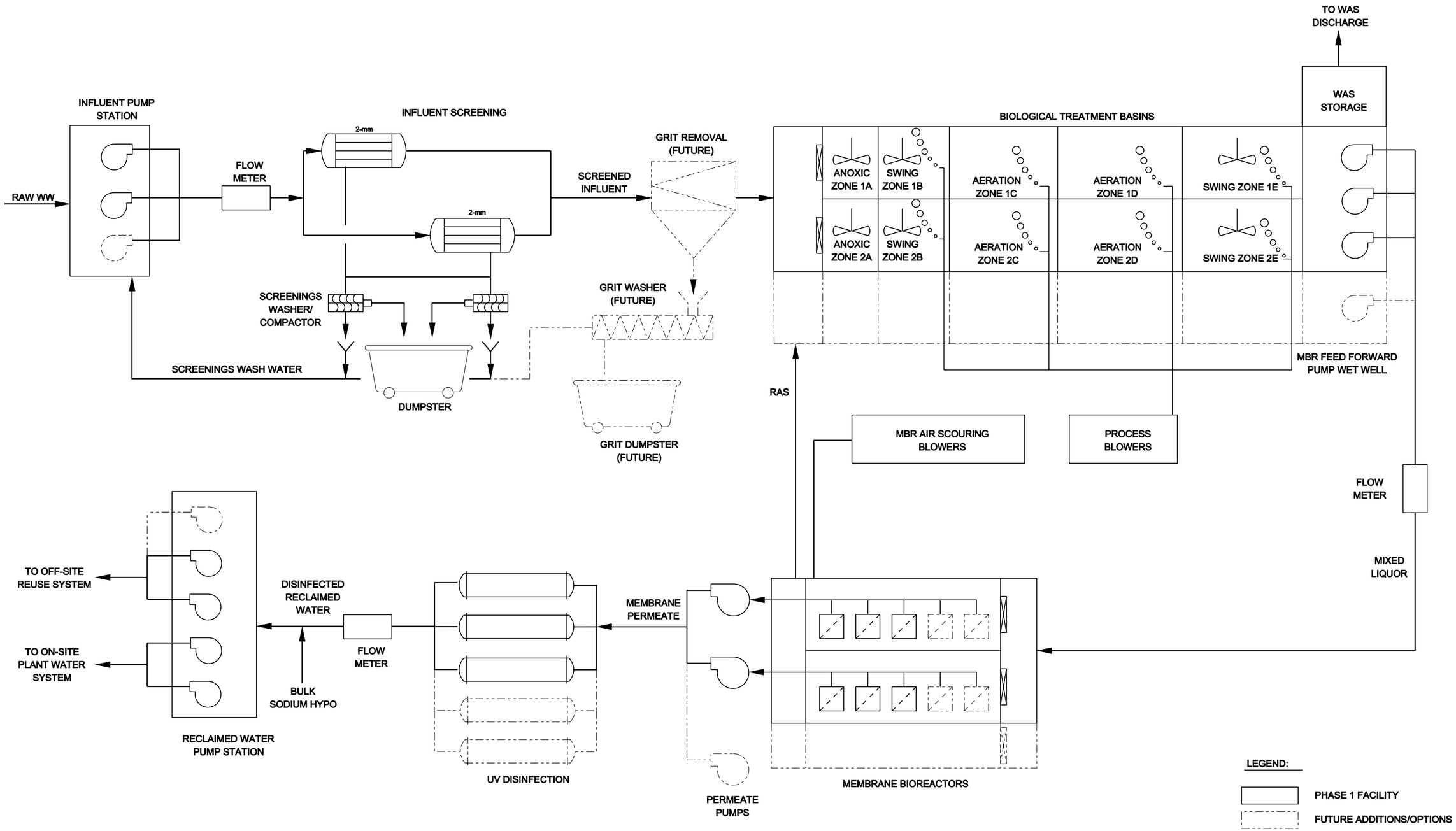

VICTOR VALLEY WASTEWATER RECLAMATION AUTHORITY
HESPERIA WRP - PRELIMINARY DESIGN REPORT

HDR

carollo

PROCESS FLOW DIAGRAM

FIG ESA-2

A FRONT ELEVATION
VIEW FROM THE WEST

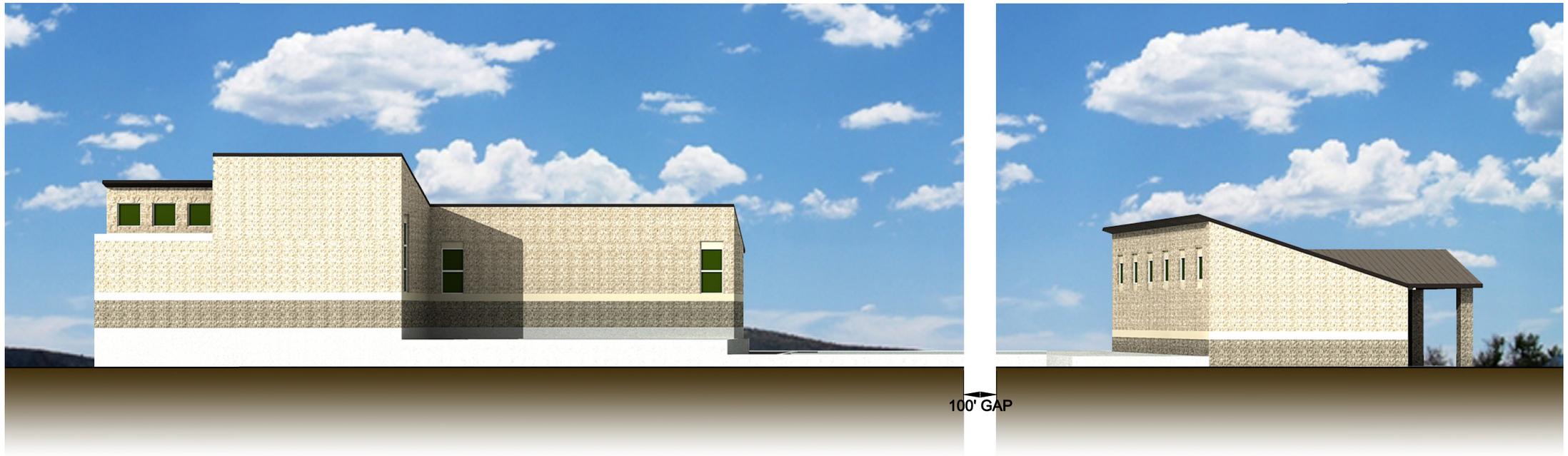

B REAR ELEVATION
VIEW FROM THE EAST

VICTOR VALLEY WASTEWATER RECLAMATION AUTHORITY
HESPERIA WRP - PRELIMINARY DESIGN REPORT

HDR

carollo

CONCEPTUAL ARCHITECTURAL ELEVATIONS

FIGURE ESA-3

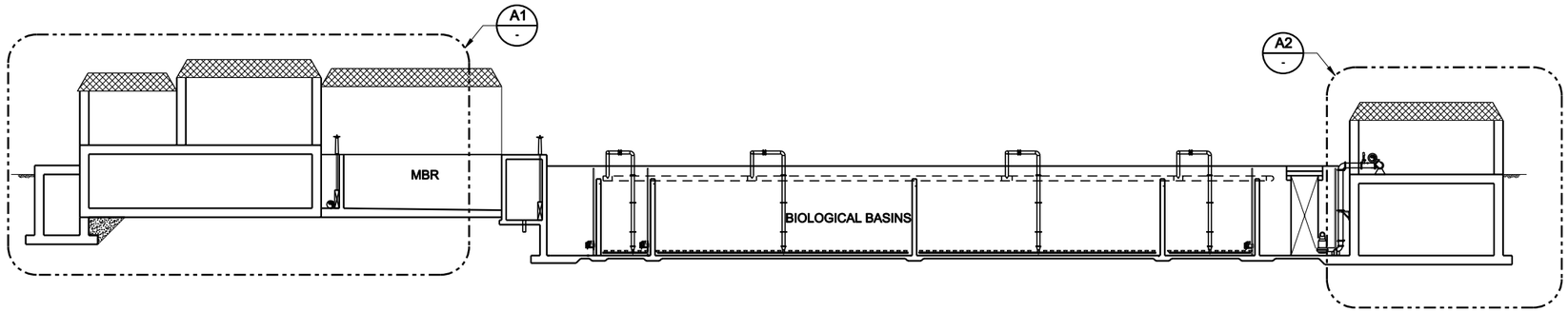

A - SECTION
SCALE: 1/16" = 1'-0"
FILE: 8229A00-SM-0100.dgn
0 2' 4' 6' 12'

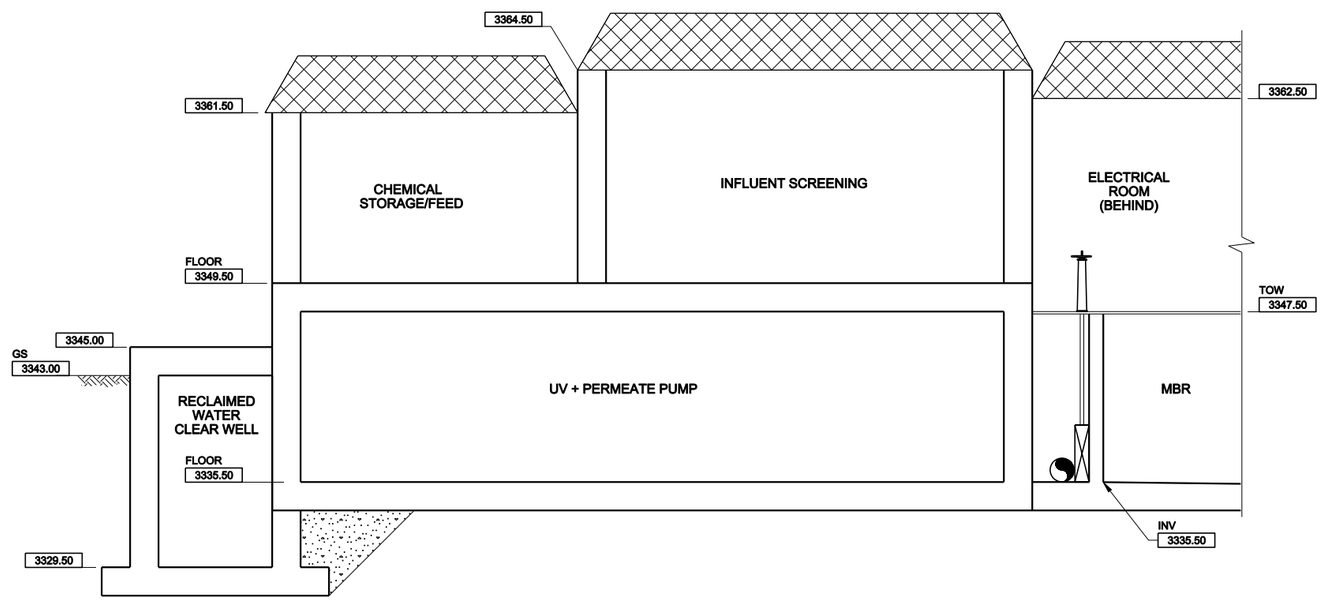

A1 - SECTION
SCALE: 3/16" = 1'-0"
FILE: 8229A00-SM-0100.dgn
0 2' 4' 6' 12'

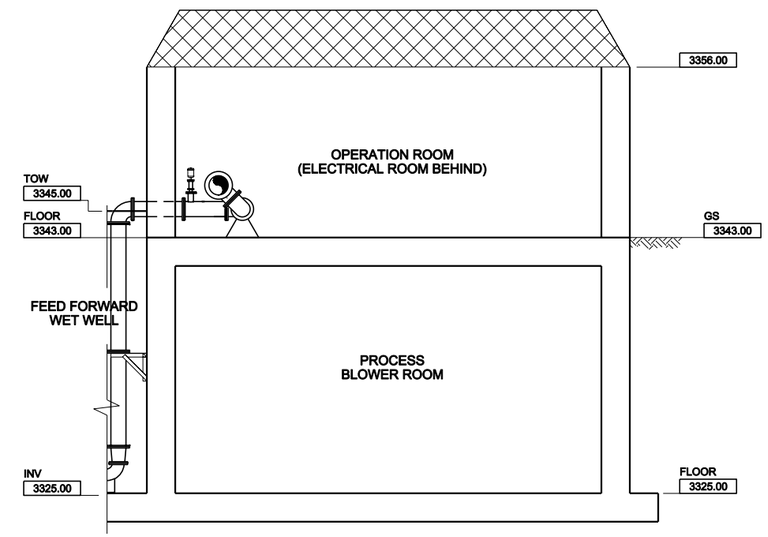

A2 - SECTION
SCALE: 3/16" = 1'-0"
FILE: 8229A00-SM-0100.dgn
0 2' 4' 6' 12'

VICTOR VALLEY WASTEWATER RECLAMATION AUTHORITY
HESPERIA WRP - PRELIMINARY DESIGN REPORT

HDR

carollo

PLANT - SECTION A

FIG ESA-4

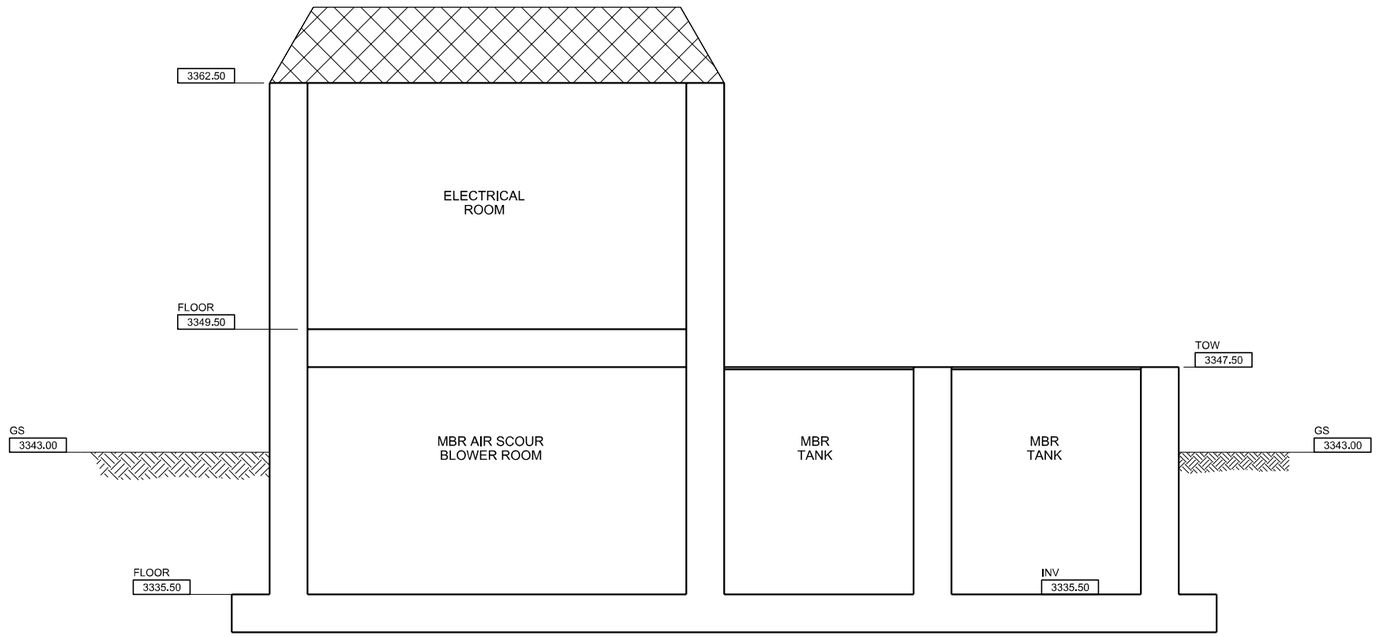

B - **SECTION**

SCALE: 1/4" = 1'-0"
FILE: 8229A00-S-09-300.dgn

0 2' 4' 8'

VICTOR VALLEY WASTEWATER RECLAMATION AUTHORITY
HESPERIA WRP - PRELIMINARY DESIGN REPORT

HDR

carollo

PLANT - SECTION B

FIG ESA-5

4.0 BASIS OF DESIGN

The proposed Hesperia WRP basis of design is presented in Table ESA.1.

Table ESA.1 Design Criteria
Hesperia WRP
Victor Valley Wastewater Reclamation Authority, California

Design Parameters	Units	Phase 1	Phase 2
FLOW RATES (1)			
Design Flow	mgd	1.0	2.0
Minimum Flow	mgd	0.2	0.2
INFLUENT WASTEWATER QUALITY (2)			
Total BOD			
Annual Average	mg/L	305	305
Maximum Month	mg/L	468	468
Soluble BOD			
Annual Average	mg/L	130	130
Maximum Month	mg/L	200	200
TSS			
Annual Average	mg/L	355	355
Maximum Month	mg/L	577	577
NH_4-N			
Annual Average	mg/L	21	21
Maximum Month	mg/L	26	26
TKN			
Annual Average	mg/L	31	31
Maximum Month	mg/L	36	36
Alkalinity			
Annual Average	mg/L	200	200
Maximum Month	mg/L	200	200
Temperature (3)			
Annual Average	°C	15	15
Maximum Month	°C	15	15
pH (4)			
Annual Average	--	7.0	7.0
Maximum Month	--	7.0	7.0

Table ESA.1 Design Criteria Hesperia WRP Victor Valley Wastewater Reclamation Authority, California			
Design Parameters	**Units**	**Phase 1**	**Phase 2**
INFLUENT SCREENING			
Screens			
Type of Screen	--	Rotary drum, perforated plate	
Stage of Screening	--	1 stage	
Perforation Diameter	mm	2	
Screen Capacity, each	mgd	2.0	
Number of Screens (duty + standby)	--	1+1	1+1
Screenings Washer/Compactor			
Type of Washer/Compactor	--	Screw press	
Number of Washer/Compactor (duty+ standby)	--	1+1	1+1
Type of Headworks Odor Control System	--	In-ground biofilter	
BIOLOGICAL TREATMENT SYSTEM			
Biological Basins			
Type of Basins	--	Single Pass, multiple zones	
Number of Parallel Trains	--	2	3
Basin Volume, each Train	MG	0.331	0.331
Total Basin Volume	MG	0.662	0.993
Side Water Depth	ft	17 to 19 (5)	
Basin Width (6), each Train	ft	20	
Zone Lengths (6)			
Zone 1 - Anoxic	ft	20	
Zone 2 - Aerobic	ft	45	
Zone 3 - Aerobic	ft	45	
Zone 4 - Swing (Aerobic / Anoxic)	ft	20	
Total Basin Length, each Train	ft	130	
Aeration System			
Type of Diffusers	--	Fine bubble, membrane discs	
Blower Air Requirement	scfm	1,700	4,000
Number of Blowers (Duty + Standby)	--	2+1	4+1
Blower Capacity, each	scfm	1,000	1,000
Firm Blower Capacity, total	scfm	2,000	4,000
Estimated Discharge Pressure (7)	psig	9.4	9.4

Table ESA.1 Design Criteria Hesperia WRP Victor Valley Wastewater Reclamation Authority, California			
Design Parameters	**Units**	**Phase 1**	**Phase 2**
Feed Forward Pumping			
Feed Forward Wet Well Width (6)	ft	20	20
Feed Forward Wet Well Length (6)	ft	40	60
Solids Content	%	0.8 (range between 0.7 and 1.0)	
Pump Type	--	Submersible, Centrifugal, Wet Pit	
Pump Motor Control	--	VFD	
Design Flow	mgd	5.0	10.0
Number of Pumps (Duty + Standby)	--	2+1	3+1
Pump Capacity (Number of Pumps @ Capacity)	gpm	2 @ 2,350 gpm 1 @ 1,100 gpm	4 @ 2,350 gpm
Firm Capacity	mgd	5.0	10.2
Total Capacity	mgd	8.4	13.5
MEMBRANE FILTRATION SYSTEM			
Number of Membrane Trains	--	2	2
Number of Membrane Cassettes per Train	--	3	5
Number of Cassette Spaces per Train	--	5	5
Number of Membrane Modules per Cassette (8)	--	42	42
Total Membrane Area, “n” Condition	sq ft	85,680	142,800
Total Membrane Area, “n-1” Condition	sq ft	42,840	71,400
Design Membrane Flux, “n” Condition	gfd	11.7	14.0
Design Flow, “n” Condition	mgd	1.0	2.0
Design Flow, “n-1” Condition	mgd	0.5	1.0
DISINFECTION SYSTEM			
Maximum Total Suspended Solids	mg/L	5	
Type of UV Reactor	--	Closed-vessel	
Type of UV Lamp	--	LP/HO or MP	
Minimum UV Transmittance	%	65	
Design Dose	mJ/cm^2	88	
Number of UV Units (duty + standby) (9)	--		
LP/HO	--	2+1	3+1 or 4+1
MP	--	4+2	8+2
Type of Cleaning	--	Automatic chemical/mechanical	
End of Lamp Life (9)	--	0.80 – 0.90	

Table ESA.1 Design Criteria Hesperia WRP Victor Valley Wastewater Reclamation Authority, California			
Design Parameters	**Units**	**Phase 1**	**Phase 2**
Lamp Fouling Factor (9)	--	0.80 - 0.90	
RECLAIMED WATER PUMP STATION			
Type of Reclaimed Water Wet Well	--	Concrete clear well	
Type of Reclaimed Water Pump	--	Vertical turbine	
Pump Capacity, each	mgd	1.0	1.0
Number of Reuse Water Pumps (duty + standby)	--	1+1	2+1
Number of Plant Water Pumps (duty + standby)	--	1+1	1+1

Notes:

(1) The sub-regional scalping plant will be designed to produce the design flow at all times.

(2) Values are based on 2007 influent data at the Victor Valley Westside Water Reclamation Plant.

(3) Temperature based on the Westside Water Reclamation Plant Phase III Process Design Summary (HDR, March 1998).

(4) Assumed value.

(5) Normal side water depth is 17 ft, with the ability to operate up to 19 ft during periods of flow equalization.

(6) Inside dimensions

(7) Estimated discharge pressure includes the additional 2 ft of side water depth provided for potential equalization. At 17 ft of SDW, the estimated discharge pressure is 8.5 psig.

(8) Maximum number of modules per cassette is 48.

(9) Number of units, end of lamp life, and lamp fouling factor depend on type of UV lamp and UV manufacturers. See DIM-7A for detail.

5.0 PROJECT COSTS AND SCHEDULE

5.1 Project Costs

The level of accuracy for construction cost estimates varies depending on the level of detail to which the project has been defined. Feasibility studies and master plans represent the lowest level of accuracy, while pre-bid estimates (based on detailed plans and specifications) represent the highest level. The American Association of Cost Engineers International (AACEI) has developed the guidelines in Table 4 for the various types of estimates.

Table ESA.2 AACEI Cost Estimate Classification Matrix for Process Industries
Hesperia WRP
Victor Valley Wastewater Reclamation Authority, California

		Primary Characteristic	Secondary Characteristic			
		Level of Project Definition	**End Usage**	**Methodology**	**Expected Accuracy Range**	**Preparation Effort**
ANSI Standard Z94.0	AACE Estimate Class	Expressed as % of complete project definition (engineering)	Typical purpose of the estimate	Typical estimating method	Typical variation in low and high ranges (1)	Typical degree of effort relative to least cost index of 1(2)
Order-of-Magnitude Estimate – 30/+50	Class 5	0% to 2%	Concept screening	Capacity factored, parametric models, judgment, or analogy	L: -20% to -50% H: +30% to +100%	1
Budget Estimate – 15/+30	Class 4	1% to 15%	Study or feasibility	Equipment factored, or parametric models	L: -15% to -30% H: +20% to +50%	2 to 4
	Class 3	10% to 40%	Budget, authorization, or control	Semi-detailed unit costs with assembly level line items	L: -10% to -20% H: +10% to +30%	3 to 10
Definitive Estimate – 5/+15	Class 2	30% to 70%	Control or bid/tender	Detailed unit cost with forced detailed take-off	L: -5% to -15% H: +5% to +20T	4 to 20
	Class 1	50% to 100%	Check estimate or bid/tender	Detailed unit cost with detailed take-off	L: -3% to -10% H: +3% to +15%	5 to 100

Notes:

(1) The state of process technology and availability of applicable reference cost data affect the range markedly. The +/- value represents typical percentage variation of actual costs from the cost estimate after application of contingency.

(2) If the cost index value of "1" represents 0.005 percent, then an index value of 100 represents 0.5 percent. Estimate preparation effort is highly dependent upon the size of the project and the quality of estimating data and tools.

(3) Table reprinted with the permission of the American Association of Cost Engineers International (AACEI).

A preliminary design level (Class 3) opinion of probable construction costs is provided in this Design Report. The provided costs will be updated at each review submittal stage during detailed design (i.e., Agency Review, and Final Submittals) to reflect the detailed development at these design stages.

An adjustment of the total direct and indirect costs to the anticipated mid-point of construction is also included. The total estimate is based on the Engineering News Record (ENR) Construction Cost Index (CCI) for the 20-Cities Average, as noted in the estimate. The adjustment for mid-point of construction is based on an annual inflation rate of 5% percent compounded to March 2011.

The construction cost summary also includes an engineering contingency of 20 percent of the total direct cost, as indicated on the cost spreadsheets. Contingencies are specific provisions for unforeseeable elements of costs within the defined project scope, and are also included to cover known, but (at this time) undefined requirements for the facilities. Items such as variations in the project configuration developed during the detailed design phase, unforeseen site conditions encountered during construction, and reasonable project changes during construction are part of the contingency.

A summary of the Construction Costs are provided in Table ESA.3. The supporting cost estimate worksheets are provided at the end of the Executive Summary.

Table ESA.3 Opinion of Probable Construction Costs
Hesperia WRP
Victor Valley Wastewater Reclamation Authority, California

Project	Total Construction Cost [1] (Millions)
Hesperia WRP	$21.6
Hesperia Lift Station & Force Main	$3.6

Note:
(1) Total construction cost is escalated to the projected mid-point of construction of March 2011.

5.2 Project Schedule

The preliminary project schedule is based upon feedback from VVWRA on the timing of the project and the anticipated construction duration and is presented in Table ESA.4.

Table ESA.4 Project Schedule
Hesperia WRP
Victor Valley Wastewater Reclamation Authority, California

Activity	Duration
Detailed Design (1)	9 months
Bidding Phase (2)	3 months
Construction Phase (3)	18 months
Environmental Impact Report Schedule (4)	10 months (March 2010 completion)

Notes:

(1) Detail design starts upon Notice to Proceed.

(2) Bidding phase starts following detail design completion. The time of bidding phase is contingent upon funding.

(3) Construction starts following bidding phase.

(4) Environmental Impact Report starts in May 2009.

PRELIMINARY COST ESTIMATE WORKSHEETS

carollo
Engineers...Working Wonders With Water™

PROJECT SUMMARY

Project:	**VVWRA/Hesperia/Apple Valley - Preliminary Estimate**	**Estimate Class:**	**3**
Job #:	**8229A.00**	**PIC:**	**J Hagstrom**
Location:	**City of Hesperia, CA**	**PM:**	**A Gilmore**
Zip Code:	**92340**	**Date:**	**11/25/09**
		By:	**Z Liu**
		Reviewed:	**TD 20090728**

NO.	DESCRIPTION			TOTAL
01	GENERAL CONDITION			$2,590,000
02	INFLUENT LIFT STATION			$0
03	SCREENING			$4,554,385
04	AERATION BASIN			$2,651,450
05	MBR			$3,717,186
06	UV			$950,700
07	EFF PS			$283,268
08	SUPPLEMENTAL FACILITY			$54,648
				$0
				$0
				$0
				$0
				$0
				$0
				$0
		TOTAL DIRECT COST		**$14,801,637**
	Contingency		20.0%	$2,960,327
		Subtotal		**$17,761,965**
	General Contractor Overhead, Profit & Risk		10.0%	$1,776,196
		Subtotal		**$19,538,161**
	Escalation to Mid-Point		8.5%	$1,654,224
		Subtotal		**$21,192,385**
	Sales Tax (Based on Apple Valley tax)		8.8%	$927,167
		Subtotal		**$22,119,552**
	Bid Market Allowance		0.0%	$0
	TOTAL ESTIMATED CONSTRUCTION COST			**$22,119,552**
	Engineering, Legal & Administration Fees		10.0%	$2,211,955
	Owner's Reserve for Change Orders		5.0%	$1,105,978
	TOTAL ESTIMATED PROJECT COST			**$25,437,485**

The cost estimate herein is based on our perception of current conditions at the project location. This estimate reflects our professional opinion of accurate costs at this time and is subject to change as the project design matures. Carollo Engineers have no control over variances in the cost of labor, materials, equipment; nor services provided by others, contractor's means and methods of executing the work or of determining prices, competitive bidding or market conditions, practices or bidding strategies. Carollo Engineers cannot and does not warrant or guarantee that proposals, bids or actual construction costs will not vary from the costs presented as shown.

carollo

RECAP MATRIX

Project:VVWRA/Hesperia/Apple Valley - Preliminary Estimate | **Capacity:** | **Date :** November 25, 2009

Job #:8229A.00

Location:City of Hesperia, CA | **Estimate Class:** 3 | **Connected HP:** | **By:** Z Liu

SPEC. DIVISION/ ELEMENT DESCRIPTION	DIV. 01 GEN REQTS	DIV. 02 SITE WORK	DIV. 03 CONC	DIV. 04 MSNRY	DIV. 05 METALS	DIV. 06 WOOD & Plastics	DIV. 07 MOIST PROTN	DIV. 08 DOORS & WDOS	DIV. 09 FINISHES	DIV. 10 SPECIAL-TIES	DIV. 11 EQUIP	DIV. 12 FURN	DIV. 13 SPECIAL CONST	DIV. 14 CONVEY	DIV. 15 PLUMBG & MECH	DIV. 16 ELECT/ I & C	Div 17 INST. & CONT.	ELEMENT TOTALS	ELEMENT % of Total
01 GENERAL CONDITION	$1,590,000	$1,000,000																$2,590,000	**17.50%**
02 INFLUENT LIFT STATION																		$0	**0.00%**
03 SCREENING			$30,353	$38,389	$112,144	$30,000		$20,000	$30,000		$770,000		$2,000,000		$554,000	$554,000	$415,500	$4,554,385	**30.77%**
04 AERATION BASIN			$829,383	$70,314	$112,144	$30,000		$20,000	$30,000		$752,390		$150,000		$219,073	$219,073	$219,073	$2,651,450	**17.91%**
05 MBR			$163,261	$115,898	$112,144	$30,000		$20,000	$30,000		$1,908,000		$59,202		$393,440	$491,801	$393,440	$3,717,186	**25.11%**
06 UV									$30,000		$594,000				$59,400	$148,500	$118,800	$950,700	**6.42%**
07 EFF PS			$66,484						$30,000		$120,506				$24,101	$24,101	$18,076	$283,268	**1.91%**
08 SUPPLEMENTAL FACILITY											$36,432				$5,465	$7,286	$5,465	$54,648	**0.37%**
Total Direct Cost	**1,590,000**	**1,000,000**	**1,089,480**	**224,600**	**336,432**	**90,000**	**0**	**60,000**	**150,000**	**0**	**4,181,328**	**0**	**2,209,202**	**0**	**1,255,480**	**1,444,761**	**1,170,354**	**$14,801,637**	
Percent of Total	**10.74%**	**6.76%**	**7.36%**	**1.52%**	**2.27%**	**0.61%**	**0.00%**	**0.41%**	**1.01%**	**0.00%**	**28.25%**	**0.00%**	**14.93%**	**0.00%**	**8.48%**	**9.76%**	**7.91%**	**100.00%**	

COMMENTS / NOTES

1. Note that the above costs DO NOT include all of the applicable mark-ups for the total construction or project cost. Refer to the SUMMARY for these values.

DETAILED COST ESTIMATE

Project: VVWRA/Hesperia/Apple Valley - Preliminary Estimate
Job #: 8229A.00
Location: City of Hesperia, CA
Element: 01 GENERAL CONDITION

Date : 11/25/09
By : Z Liu
Reviewed: TD 20090728

SPEC. NO.	DESCRIPTION	QUANTITY	UNIT	UNIT COST	SUBTOTAL	TOTAL
	Division 01 - General Conditions					
01000	General Conditions	1.00	LS	$1,590,000.00	$1,590,000.00	
	Total					**$1,590,000**
	Division 02 - Site Construction					
02000	Site Work	1.00	LS	$1,000,000.00	$1,000,000.00	
	Total					**$1,000,000**
	Grand Total					**$2,590,000**

carollo
Engineers...Working Wonders With Water™

DETAILED COST ESTIMATE

Project: VVWRA/Hesperia/Apple Valley - Preliminary Estimate
Job #: 8229A.00
Location: City of Hesperia, CA
Element: 03 SCREENING

Date : 11/25/09
By : Z Liu
Reviewed: TD 20090728

SPEC. NO.	DESCRIPTION	QUANTITY	UNIT	UNIT COST	SUBTOTAL	TOTAL
	Division 03 - Concrete					
03300	12" Elevated Slab To 20'	66.67	CY	$455.27	$30,353	
	Total					**$30,353**
	Division 04 - Masonry					
04220	Concrete Block, Split Face 12"	900.00	SF	$18.28	$16,452	
04220	Concrete Block, Split Face 12"	1,200.00	SF	$18.28	$21,936	
	Total					**$38,389**
	Division 05 - Metals					
05000	Metal	1.00	LS	$100,000.00	$100,000.00	
05000	Metal Roofing	1.00	LS	$12,144.00	$12,144.00	
	Total					**$112,144**
	Division 06 - Wood and Plastics					
06000	Wood and Plastics	1.00	LS	$30,000.00	$30,000.00	
	Total					**$30,000**
	Division 08 - Doors and Windows					
08000	Doors and Windows	1.00	LS	$20,000.00	$20,000.00	
	Total					**$20,000**
	Division 09 - Finishes					
09000	Finishes	1.00	LS	$30,000.00	$30,000.00	
	Total					**$30,000**
	Division 11 - Equipment					
11332	Fine Screens	2.00	EA	$256,200.00	$512,400.00	
11333	Screenings Washer/Compactor	2.00	EA	$128,800.00	$257,600.00	
	Total					**$770,000**
	Division 13 - Special Construction					
13329	Biofilter System	1.00	LS	$2,000,000.00	$2,000,000.00	
	Total					**$2,000,000**
	Division 15 - Mechanical					
15000	Plumbing and Mechanical - IFSN	0.20	Perct	$2,770,000.00	$554,000	
	Total					**$554,000**
	Division 16 - Electrical					
16000	Electrical	0.20	Perct	$2,770,000.00	$554,000.00	
	Total					**$554,000**
	Division 17 - Instrumentation and Controls					
17000	Instrumentation and Controls	0.15	Perct	$2,770,000.00	$415,500.00	
	Total					**$415,500**
	Grand Total					**$4,554,385**

carollo
Engineers...Working Wonders With Water™

DETAILED COST ESTIMATE

Project: VVWRA/Hesperia/Apple Valley - Preliminary Estimate
Job #: 8229A.00
Location: City of Hesperia, CA
Element: 04 AERATION BASIN

Date : 11/25/09
By : Z Liu
Reviewed: TD 20090728

SPEC. NO.	DESCRIPTION	QUANTITY	UNIT	UNIT COST	SUBTOTAL	TOTAL
	Division 03 - Concrete					
03300	12" Flat Non-Formed S.O.G.	316.67	CY	$274.38	$86,889	
03300	12" Edge Forms, Slab On Grade, Add	190.00	LF	$9.68	$1,839	
03300	18" Straight Wall >8' High	422.22	CY	$720.39	$304,163	
03300	18" Straight Wall >8' High	133.33	CY	$720.39	$96,050	
03300	18" Straight Wall >8' High	211.11	CY	$720.39	$152,081	
03300	18" Straight Wall >8' High	188.89	CY	$720.39	$136,074	
03300	18" Straight Wall >8' High	66.67	CY	$720.39	$48,028	
03300	12" Flat Non-Formed S.O.G.	14.81	CY	$274.38	$4,064	
03300	12" Edge Forms, Slab On Grade, Add	20.00	LF	$9.68	$194	
	Total					**$829,383**
	Division 04 - Masonry					
04220	Concrete Block, Split Face 12"	1,740.00	SF	$18.28	$31,808	
04220	Concrete Block, Split Face 12"	1,740.00	SF	$18.28	$31,808	
04220	Standard Concrete Block, 12"	390.00	SF	$17.17	$6,698	
	Total					**$70,314**
	Division 05 - Metals					
05000	Metal	1.00	LS	$100,000.00	$100,000.00	
05000	Metal Roofing	1.00	LS	$12,144.00	$12,144	
	Total					**$112,144**
	Division 06 - Wood and Plastics					
06000	Wood and Plastics	1.00	LS	$30,000.00	$30,000.00	
	Total					**$30,000**
	Division 08 - Doors and Windows					
08000	Doors and Windows	1.00	LS	$20,000.00	$20,000.00	
	Total					**$20,000**
	Division 09 - Finishes					
09000	Finishes	1.00	LS	$30,000.00	$30,000.00	
	Total					**$30,000**
	Division 11 - Equipment					
11293	Slide Gate, 36" X 36"	2.00	EA	$13,048.23	$26,096	
11293	Slide Gate, 48" X 48"	2.00	EA	$16,385.65	$32,771	
11312	10Hp Submersible Sump Pump	2.00	EA	$22,536.47	$45,073	
11312	15Hp Submersible Sump Pump	1.00	EA	$32,656.47	$32,656	
11312	30Hp Submersible Sump Pump	2.00	EA	$42,776.47	$85,553	
11317	Submersible Mixers - High Speed	6.00	EA	$16,698.00	$100,188.00	
11376	Rotary Positive Displacement Blower	4.00	EA	$51,600.00	$206,400.00	
11378	Membrane Disk Fine Bubble Diffused Aeration System	1.00	LS	$223,651.99	$223,651.99	
	Total					**$752,390**
	Division 13 - Special Construction					
13000	Aluminum Aeration Basin Cover	1.00	LS	$150,000.00	$150,000.00	
	Total					**$150,000**
	Division 15 - Mechanical					
15000	Plumbing and Mechanical - AB	0.25	Perct	$876,293.62	$219,073.40	
	Total					**$219,073**
	Division 16 - Electrical					
16000	Electrical	0.25	Perct	$876,293.62	$219,073.40	
	Total					**$219,073**
	Division 17 - Instrumentation and Controls					
17000	Instrumentation and Controls	0.25	Perct	$876,293.62	$219,073.40	
	Total					**$219,073**
	Grand Total					**$2,651,451**

carollo
Engineers...Working Wonders With Water™

DETAILED COST ESTIMATE

Project: VVWRA/Hesperia/Apple Valley - Preliminary Estimate
Job #: 8229A.00
Location: City of Hesperia, CA
Element: 05 MBR

Date : 11/25/09
By : Z Liu
Reviewed: TD 20090728

SPEC. NO.	DESCRIPTION	QUANTITY	UNIT	UNIT COST	SUBTOTAL	TOTAL
	Division 03 - Concrete					
03300	12" Flat Non-Formed S.O.G.	74.07	CY	$274.38	$20,324	
03300	12" Edge Forms, Slab On Grade, Add	50.00	LF	$9.68	$484	
03300	18" Straight Wall >8' High	53.33	CY	$720.39	$38,418	
03300	18" Straight Wall >8' High	23.33	CY	$720.39	$16,807	
03300	18" Straight Wall >8' High	26.67	CY	$720.39	$19,213	
03300	12" Sloped Slab On Grade (To 30%)	29.63	CY	$399.98	$11,851	
03300	12" Sloped S.O.G. Edge Forms (To 30%), Add	40.00	LF	$10.88	$435	
03300	12" Elevated Slab To 20'	74.07	CY	$455.27	$33,722	
03300	12" Flat Non-Formed S.O.G.	29.63	CY	$274.38	$8,130	
03300	12" Edge Forms, Slab On Grade, Add	40.00	LF	$9.68	$387	
03300	12" Elevated Slab To 20'	29.63	CY	$455.27	$13,490	
	Total					**$163,261**
	Division 04 - Masonry					
04220	Concrete Block, Split Face 12"	1,040.00	SF	$18.28	$19,012	
04220	Concrete Block, Split Face 12"	280.00	SF	$18.28	$5,119	
04220	Concrete Block, Split Face 12"	1,560.00	SF	$18.28	$28,517	
04220	Concrete Block, Split Face 12"	520.00	SF	$18.28	$9,506	
04220	Concrete Block, Split Face 12"	640.00	SF	$18.28	$11,699	
04220	Concrete Block, Split Face 12"	1,000.00	SF	$18.28	$18,280	
04220	Concrete Block, Split Face 12"	1,000.00	SF	$18.28	$18,280	
04220	Concrete Block, Split Face 12"	300.00	SF	$18.28	$5,484	
	Total					**$115,897**
	Division 05 - Metals					
05000	Metal	1.00	LS	$100,000.00	$100,000.00	
05000	Metal Roofing	1.00	LS	$12,144.00	$12,144	
	Total					**$112,144**
	Division 06 - Wood and Plastics					
06000	Wood and Plastics	1.00	LS	$30,000.00	$30,000.00	
	Total					**$30,000**
	Division 08 - Doors and Windows					
08000	Doors and Windows	1.00	LS	$20,000.00	$20,000.00	
	Total					**$20,000**
	Division 09 - Finishes					
09000	Finishes	1.00	LS	$30,000.00	$30,000.00	
	Total					**$30,000**
	Division 11 - Equipment					
11500	Membrane Equipment System (Loose Ship)	1.00	LS	$1,908,000.00	$1,908,000.00	
	Total					**$1,908,000**
	Division 13 - Special Construction					
13209	Back Pulse Tank	1.00	LS	$59,202.00	$59,202.00	
	Total					**$59,202**
	Division 15 - Mechanical					
15000	Plumbing and Mechanical - MBR	0.20	Perct	$1,967,202.00	$393,440.40	
	Total					**$393,440**
	Division 16 - Electrical					
16000	Electrical	0.25	Perct	$1,967,202.00	$491,800.50	
	Total					**$491,800**
	Division 17 - Instrumentation and Controls					
17000	Instrumentation and Controls	0.20	Perct	$1,967,202.00	$393,440.40	
	Total					**$393,440**
	Grand Total					**$3,717,186**

carollo
Engineers...Working Wonders With Water™

DETAILED COST ESTIMATE

Project: VVWRA/Hesperia/Apple Valley - Preliminary Estimate
Job #: 8229A.00
Location: City of Hesperia, CA
Element: 06 UV

Date : 11/25/09
By : Z Liu
Reviewed: TD 20090728

SPEC. NO.	DESCRIPTION	QUANTITY	UNIT	UNIT COST	SUBTOTAL	TOTAL
	Division 09 - Finishes					
09000	Finishes	1.00	LS	$30,000.00	$30,000.00	
	Total					**$30,000**
	Division 11 - Equipment					
11287	UV Disinfection System	1.00	LS	$594,000.00	$594,000.00	
	Total					**$594,000**
	Division 15 - Mechanical					
15000	Plumbing and Mechanical - UV	0.10	Perct	$594,000.00	$59,400.00	
	Total					**$59,400**
	Division 16 - Electrical					
16000	Electrical	0.25	Perct	$594,000.00	$148,500.00	
	Total					**$148,500**
	Division 17 - Instrumentation and Controls					
17000	Instrumentation and Controls	0.20	Perct	$594,000.00	$118,800.00	
	Total					**$118,800**
	Grand Total					**$950,700**

carollo
Engineers...Working Wonders With Water™

DETAILED COST ESTIMATE

Project: VVWRA/Hesperia/Apple Valley - Preliminary Estimate
Job #: 8229A.00
Location: City of Hesperia, CA
Element: 07 EFF PS

Date : 11/25/09
By : Z Liu
Reviewed: TD 20090728

SPEC. NO.	DESCRIPTION	QUANTITY	UNIT	UNIT COST	SUBTOTAL	TOTAL
	Division 03 - Concrete					
03300	18" Straight Wall >8' High	68.89	CY	$720.39	$49,628	
03300	12" Flat Non-Formed S.O.G.	14.81	CY	$274.38	$4,064	
03300	12" Edge Forms, Slab On Grade, Add	40.00	LF	$9.68	$387	
03300	18" Straight Wall >8' High	17.22	CY	$720.39	$12,405	
	Total					**$66,484**
	Division 09 - Finishes					
09000	Finishes	1.00	LS	$30,000.00	$30,000.00	
	Total					**$30,000**
	Division 11 - Equipment					
11312	20Hp Vertical Turbine Pump	2.00	EA	$32,656.47	$65,313	
11312	10Hp Vertical Turbine Pump	2.00	EA	$27,596.47	$55,193	
	Total					**$120,506**
	Division 15 - Mechanical					
15000	Plumbing and Mechanical - EPS	0.20	Perct	$120,505.87	$24,101.17	
	Total					**$24,101**
	Division 16 - Electrical					
16000	Electrical	0.20	Perct	$120,505.87	$24,101.17	
	Total					**$24,101**
	Division 17 - Instrumentation and Controls					
17000	Instrumentation and Controls	0.15	Perct	$120,505.87	$18,075.88	
	Total					**$18,076**
	Grand Total					**$283,268**

DETAILED COST ESTIMATE

Project: VVWRA/Hesperia/Apple Valley - Preliminary Estimate
Job #: 8229A.00
Location: City of Hesperia, CA
Element: 08 SUPPLEMENTAL FACILITY

Date : 11/25/09
By : Z Liu
Reviewed: TD 20090728

SPEC. NO.	DESCRIPTION	QUANTITY	UNIT	UNIT COST	SUBTOTAL	TOTAL
	Division 11 - Equipment					
11242	Bulk Sodium Hypochlorite Pumps	4.00	EA	$9,108.00	$36,432.00	
	Total					**$36,432**
	Division 15 - Mechanical					
15000	Plumbing and Mechanical - SF	0.15	Perct	$36,432.00	$5,464.80	
	Total					**$5,465**
	Division 16 - Electrical					
16000	Electrical	0.20	Perct	$36,432.00	$7,286.40	
	Total					**$7,286**
	Division 17 - Instrumentation and Controls					
17000	Instrumentation and Controls	0.15	Perct	$36,432.00	$5,464.80	
	Total					**$5,465**
	Grand Total					**$54,648**

HESPERIA WATER RECLAMATION PLANT

DESIGN INFORMATION MEMORANDUM NO. 1A

DESIGN FLOWS AND LOADINGS

Project Name:	Hesperia and Apple Valley Scalping WRPs, Raw Sewage Lift Station and Force Mains		
Client:	Victor Valley Wastewater Reclamation Authority	**Date:**	December 2009

INTRODUCTION

The purpose of this Design Information Memorandum (DIM) No. 1A is to define the design influent flows and loadings and effluent quality criteria for the Hesperia Water Reclamation Plant (WRP). The criteria presented in this DIM No. 1A serves as the basis for the design of the treatment process and facilities of the Hesperia WRP.

DESIGN FLOW QUANTITIES

The Hesperia WRP will be a sub-regional scalping facility to treat a portion of wastewater from its local collection system. The WRP will be designed to treat plant throughput capacities of 1.0 million gallons per day (mgd) in Phase 1, expandable to 2.0 mgd in Phase 2, and 4.0 mgd at buildout. No further expansions beyond 4.0 mgd are anticipated at the Hesperia WRP site.

The plant will be designed to produce the design flow at all times. If the flow in the interceptor is always greater than the design flow, the WRP will bypass flows above the design flows. However, flow equalization may be required in order to maintain reclaimed water production at the design flow at times when flows in the interceptor are smaller than the design flow of 1.0 mgd for Phase 1.

Diurnal Flow Analysis

An analysis of the diurnal flow profile for the Hesperia collection system was conducted in order to evaluate whether the raw wastewater flow in the interceptor would allow a consistent reclaimed water production flow of 1.0 mgd in Phase 1, and evaluate the need for flow equalization in the treatment process trains.

Two scenarios were considered in the analysis of the diurnal flows for the Hesperia WRP. The first scenario was based on an average day flow of 2.3 mgd, which is the predicted average day flow at plant startup in the year 2012 as reported in the City of Hesperia Wastewater Master Plan (Carollo Engineers, 2008). The second scenario was based on an average day flow of 1.0 mgd, based on historical and anecdotal information, and represents the minimum influent average day flow at which an average reclaimed water production of 1.0 mgd can be maintained.

The diurnal flow profile for this analysis was estimated by averaging normalized flow profiles at different points in the Hesperia collection system. The normalized flow profiles were based on a flow monitoring study performed as part of the City of Hesperia Wastewater Master Plan (Carollo Engineers, 2008). The average normalized diurnal profile was used to generate diurnal flow profiles for the two scenarios described above, at 1.0 mgd and at 2.3 mgd average day flows.

Diurnal profiles are presented in Figure 1A.1. For the two scenarios evaluated, there are periods of the day when the flow in the interceptor would be less than the design flow of 1.0 mgd in Phase 1. Equalization volume and pumping capacity need to be provided in order to consistently produce the required reclaimed water flow of 1.0 mgd under Phase 1. At an average day flow of 2.3 mgd, the estimated equalization volume required is 9,241 gallons. At an average day flow of 1.0 mgd, the estimated equalization volume required is 144,740 gallons. Equalization strategies are discussed further in DIM No. 6A, and the implications on influent pumping are discussed in DIM No. 1C.

INFLUENT FLOW CHARACTERISTICS

The influent wastewater quality characteristics define the constituent loadings to the Hesperia WRP. The influent wastewater design criteria characteristics include total biochemical oxygen demand (BOD), soluble BOD, total suspended solids (TSS), ammonium-nitrogen (NH_4-N), total kjeldahl nitrogen (TKN), alkalinity, and temperature.

Review of Existing Wastewater Quality Data

Wastewater quality data was received for review and analysis. Wastewater samples are regularly collected at the Hesperia Metering Station. The sampling point is located at the point of discharge to the VVWRA interceptor going to the Westside WRP. Therefore, the data is inclusive of all contributions (domestic, commercial, industrial) in each City.

Daily composite samples at the Metering Station are collected once every month, and analyzed for various constituents including Chemical Oxygen Demand (COD), Biochemical Oxygen Demand (BOD), Total Suspended Solids (TSS), and ammonia (NH_3-N), among others. Data between July 2005 and August 2009 was made available for analysis.

Appendix 1A includes a detailed summary of the historical data reviewed for this analysis, including basic statistics and charts for the different constituents relevant for the design of the wastewater treatment process.

A summary of wastewater quality design criteria for the Westside WRP was also received for analysis. The design wastewater characteristics for the Westside WRP are based on 2007 plant data, and include annual average day and maximum month average day constituent concentrations.

Table 1A.1 shows a comparison between the average constituent concentrations for the Westside WRP and Hesperia Metering Station. COD, BOD, and TSS average concentrations for Hesperia are based on data between July 2005 and August 2009. Ammonia averages for Hesperia are based on data between September 2007 and August 2009. Ammonia values between July 2005 and September 2006 were not used in the calculation of the averages because the values are believed to be overestimated due to inaccuracies of the chemical analysis method used during that timeframe, based on discussions with VVWRA laboratory staff. After close review of the data, ammonia values between October 2006 and August 2007 were also excluded from the overall averages, due to the marked difference between values before and after August 2007.

Constituent concentrations at Hesperia are higher than the wastewater characteristics at the Westside WRP. Reasons for these differences are attributed to the relatively higher contributions of commercial and industrial discharges in Hesperia.

Based on the most recent wastewater master plan (Carollo Engineers, July 2008), Hesperia's commercial and industrial flows for 2005 were 34 percent of the total flow. However, the area tributary to the specific Hesperia WRP site includes a higher commercial/industrial contribution than the entire City. This is due to a commercial/industrial corridor located along the freeway (I-15). Based on information in the wastewater master plan, the commercial/industrial flow contribution for the proposed WRP's service area is approximately 50 percent.

BOD concentrations are trending down for Hesperia. However, it should be noted that the specific tributary area for the proposed WRP location includes a higher commercial/industrial contribution than what is reflected in the historical data reviewed herein. TSS and ammonia are also trending up over time.

Table 1A.1 Comparison of Average Influent Wastewater Quality Characteristics Hesperia WRP Design Information Memoranda Victor Valley Wastewater Reclamation Authority, California

Constituent	Unit	Westside WRP (1)	Hesperia (2)
Total COD	mg/L	-	990
Total BOD	mg/L	305	461
Soluble BOD	mg/L	130	-
TSS	mg/L	355	439
NH_3-N (3)	mg/L	21	29.3
TKN	mg/L	31	-
Alkalinity	mg/L	200	-
Temperature (4)	°C	15 - 28	-

Notes:
(1) Values are based on 2007 influent data at the Victor Valley Westside WRP.
(2) Values based on 2005 – 2009 historical data at the Hesperia Metering Station. One sample per month is reported.
(3) Values based on historical data between September 2007 and August 2009.
(4) Temperature based on the Westside WRP Phase III Process Design Summary (HDR, March 2008).

Design Influent Wastewater Characteristics

Table 1A.2 summarizes the design wastewater characteristics for the Hesperia WRP. The proposed design influent wastewater characteristics are based on the historical wastewater quality information for Hesperia, discussed in the previous section.

The Hesperia WRP is designed as a scalping facility, and a maximum month flow (hydraulic) peaking factor has not been considered in the design. However, constituent loadings are expected to vary throughout the year. Increased constituent loadings result in maximum month loading conditions, which are further referred to as MMADF conditions throughout this report.

The maximum month load peaking factors for BOD, TSS, and TKN are 1.5, 1.5, and 1.3, respectively. The design maximum month peaking factors for constituent concentrations are based on the wastewater quality criteria used at the Westside WRP. Because only one sample per month is reported for the Hesperia Metering Station, a maximum month peaking factor could not be calculated from the historical data.

It is recommended that once the Hesperia WRP is constructed and operating, regular influent sampling be conducted to verify the design values, and to establish a long-term history of influent wastewater characteristics for future expansions.

Table 1A.2 Design Influent Wastewater Quality Characteristics
Hesperia WRP Design Information Memoranda
Victor Valley Wastewater Reclamation Authority, California

Constituent	Unit	Annual Average	Maximum Month(1)
Total COD	mg/L	990	1,485
Total BOD	mg/L	461	691
Soluble BOD (2)	mg/L	198	297
TSS	mg/L	439	659
NH_3-N	mg/L	29.3	38.1
TKN (3)	mg/L	43.3	56.3
Alkalinity (4)	mg/L	200	200
Temperature (5)	°C	15	15
pH (5)	--	7.0	7.0

Notes:
(1) Maximum month peaking factors of 1.5 (BOD, COD, TSS) and 1.3 (TKN, NH_4-N) based on 2007 influent data at the Victor Valley Westside WRP.
(2) Soluble BOD fraction of 43% based on 2007 influent data at the Victor Valley Westside WRP.
(3) TKN based on ammonia to TKN ratio for the 2007 influent data at the Victor Valley Westside WRP.
(4) Based on 2007 influent data at the Victor Valley Westside WRP.
(5) Temperature based on the Westside WRP Phase III Process Design Summary (HDR, March 1998).

EFFLUENT QUALITY GOALS

Anticipated effluent quality are based on VVWRA Request for Proposal Attachment A - Effluent Limitations and Discharge Specifications, California Department of Public Health Title 22 Code of Regulations, Water Recycling Criteria, and August 5, 2008 Draft Regulation for Groundwater Recharge Reuse. Table 1A.3 lists effluent quality criteria based on different regulations, along with the recommended effluent quality design criteria.

Table 1A.3 Reclaimed Water Quality Standards and Recommended Design Criteria
Hesperia WRP Design Information Memoranda
Victor Valley Wastewater Reclamation Authority, California

Parameter	VVWRA RFP Attachment A Effluent Limit	Title 22 Water Recycling Criteria	Draft Regulation for Groundwater Recharge Reuse	Recommended Effluent Design Criteria
pH	6.5 - 8.5	--	--	6.5 - 8.5
BOD_5 (mg/L)		--	--	
Avg. Monthly	10			10
Avg. Weekly	15			15
Max. Daily	30			30

Table 1A.3 Reclaimed Water Quality Standards and Recommended Design Criteria Hesperia WRP Design Information Memoranda Victor Valley Wastewater Reclamation Authority, California

Parameter	VVWRA RFP Attachment A Effluent Limit	Title 22 Water Recycling Criteria	Draft Regulation for Groundwater Recharge Reuse	Recommended Effluent Design Criteria
TSS (mg/L)		--	--	
Avg. Monthly	10			10
Avg. Weekly	15			15
Max. Daily	30			30
Total N (mg/L)	--	--	5	8 / 4 (1)
Turbidity (NTU)	--		--	
24-hr 5% of time sample max.		0.2		0.2
Any time max.		0.5		0.5
Total Coliform (CFU/100 mL)	--		--	
7-day median max.		2.2		2.2
30-day one sample max.		23		23
Single sample max. any time		240		240

Note:
(1) Biological process will be designed to treat to a goal of 8 mg/L, with the flexibility to meet future end use limits at a goal of 4 mg/L (80 percent of maximum limits of 10 and 5 mg/L, respectively).

SUMMARY AND RECOMMENDATIONS

It is recommended that influent wastewater quality values based on historical data at the Hesperia Metering Station be used to design the facilities of the Hesperia WRP. Once the WRP is constructed and operating, it is recommended that regular influent sampling be conducted to verify the design values, and establish values for future expansions.

The recommended effluent quality goals comply with applicable regulations for water reuse in California. We recommend designing the biological treatment system to initially comply with a maximum Total Nitrogen (TN) limit of 10 mg/L, with provisions to meet a TN limit of 5 mg/L with minimal process modifications. Using a recommended 20 percent safety factor, the biological process will be designed to 80 percent of the maximum limits, resulting in a near-term effluent design criteria of 8 mg/L, with provisions to meet 4 mg/L in the future with minimal process modifications.

V:\V:\Client 20 (OCO)\Reports\8229a00 100\Fig_1a-1.ai

ESTIMATED DIURNAL FLOW PROFILES

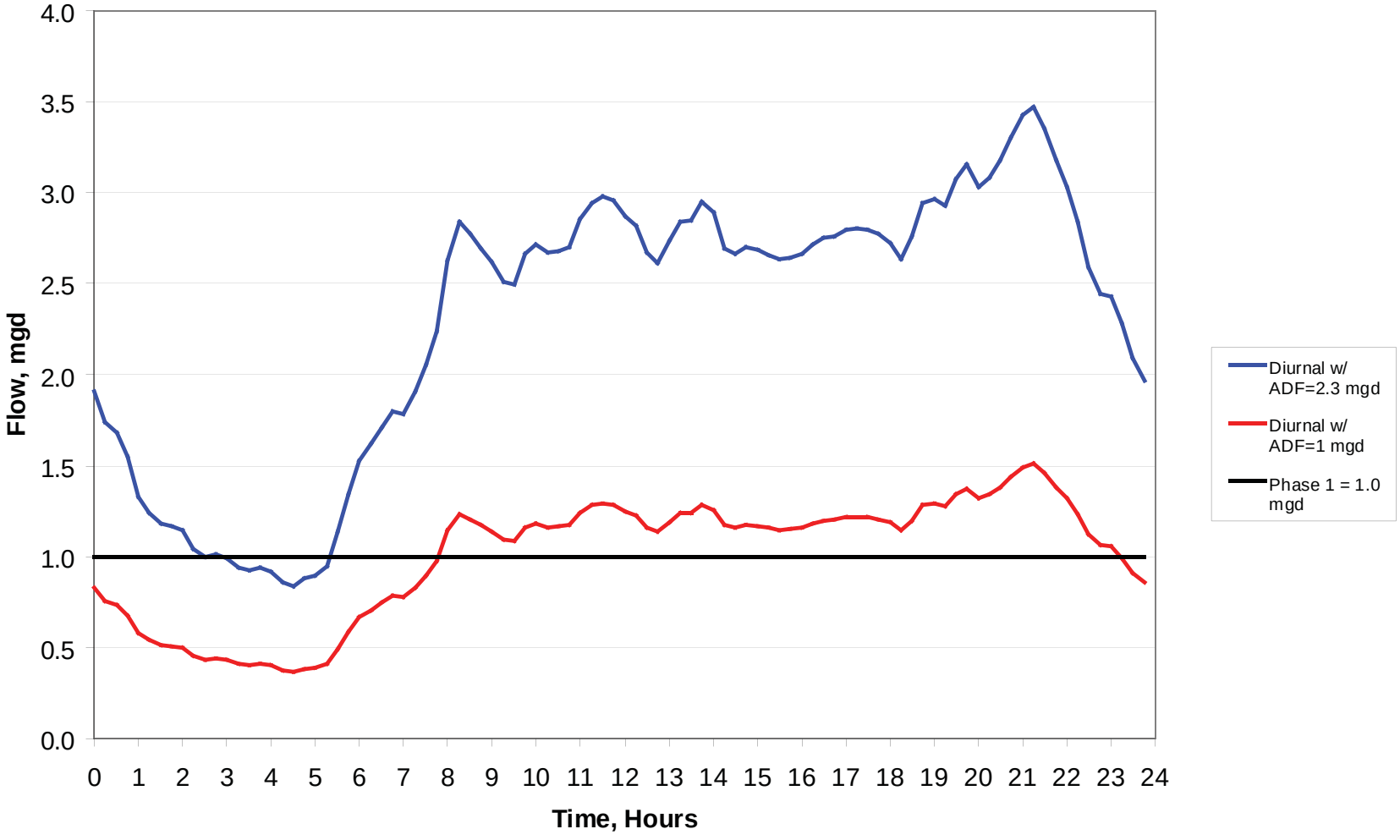

FIG 1A.1

carollo HDR

VICTOR VALLEY WATER RECLAMATION AUTHORITY - HESPERIA WRP - PRELIMINARY DESIGN REPORT

APPENDIX 1A

Wastewater Characteristics from VVWRA Metering Station

HESPERIA

Victor Valley Water Reclamation Authority
Hesperia and Apple Valley Scalping WRPs
Project No: 8229A.00

Hesperia

Wastewater Characteristics from VVWRA Metering Station
All samples are 24 hr. composite samples unless noted otherwise.

Parameter Date	pH	NH3-N mg/L	BOD mg/L	TSS mg/L	TDS mg/L	COD mg/L	Conductivity µS/cm	Zinc µg/L	COD/BOD
07/26/05	7.18	50	538	408	419	1223			2.27
08/09/05	7.37	45	383	353	278	855			2.23
09/20/05	7.28	51.9	457	440	332	1189			2.60
10/04/05	7.11	51.2	508	432	471	937			1.84
11/01/05	7.4	48.5	441	487	508	1137			2.58
12/13/05	7.41	53.3	644	476	314	1168			1.81
01/10/06	7.27	51	496	331	357	943			1.90
02/07/06	7.33	53.9	599	358	535	1071			1.79
03/07/06	7.24	55.8	910	506	346	1516			1.67
04/11/06	7.26	54.8	636	393	382	1129			1.78
05/09/06	7.06	52.1	420	283	455	790			1.88
06/13/06	7.15	42.9	462	278	547	907			1.96
07/11/06	7.04	45.6	730	337	234	1132			1.55
08/08/06	7.23	40.6	448	306	338	820			1.83
09/12/06	7.18	49	501	331	490	895			1.79
10/10/06	7.11	18.1	466	276	461	823			1.77
11/07/06	7.05	21	325	326	373	953			2.93
12/12/06	7.36	22.1	395	436	367	845			2.14
01/09/07	7.39	21.2	377	530	385	746			1.98
02/06/07	7.38	19.5	462	348	384	773			1.67
03/13/07	7.21	21	533	560	490	1053			1.98
04/10/07	7.29	24.4	372	412	420	789			2.12
05/07/07	7.27	23.7	526	348	424	1003			1.91
06/18/07	7.33	19.5	329	248	424	780			2.37
07/16/07	7.47	17	278	264	494	647			2.33
08/13/07	7.43	18.8	254	102	510	575			2.26
09/17/07	7.4	28.2	466	594	394	1221			2.62
10/22/07	7.45	29.7	494	530	542	1030			2.09
11/12/07	7.28	29.9	420	616	788	1138			2.71
12/10/07	7.39	28.2	320	320	430	786			2.46
01/14/08	7.43	26.5	334	618	524	949	732		2.84
02/11/08	7.38	28.7	304	332	546	806	734		2.65
03/10/08	7.26	30.9	437	532	500	1050	731		2.40
04/07/08	7.21	30.9	549	626	362	1162	728		2.12
05/05/08	7.29	28.4	543	806	404	1508	697		2.78
06/09/08	7.3	26.8	499	540	408	1097	690		2.20
07/14/08	7.38	28.1	517	712	318	1158	709		2.24
08/11/08	7.3	26.8	465	416	444	872	675		1.88
09/08/08	7.4	26.2	234	282	326	599	669		2.56
10/13/08	7.3	24	430	400	380	1075	655		2.50
11/17/08	7.26	29	587	746	400	1339	697		2.28
12/08/08	7.26	27.5	601	820	380	1299	695		2.16
01/05/09	7.21	30.3	521	650	368	1334	754		2.56
02/02/09	7.28	28	457	432	406	1008	753		2.21
03/09/09	7.1	29.4	646	646	360	1368	703		2.12
04/13/09	7.19	31.4	152	62	370	440	703		2.89
05/04/09	7.11	34.6	618	860	510	1480	739	290	2.39
06/01/09	7.28	30.3	254	254	332	589	710		2.32
07/13/09	7.3	27.9	248	192	400	544	692		2.19
08/10/09	7.24	42	453	418	698	940	813		2.08

Victor Valley Water Reclamation Authority
Hesperia and Apple Valley Scalping WRPs
Project No: 8229A.00

Hesperia

Wastewater Characteristics from VVWRA Metering Station
All samples are 24 hr. composite samples unless noted otherwise.

Parameter	**pH**	**NH3-N**	**BOD**	**TSS**	**TDS**	**COD**	**Conductivity**	**Zinc**	**COD/BOD**
Date		**mg/L**	**mg/L**	**mg/L**	**mg/L**	**mg/L**	**µS/cm**	**µg/L**	
2005-2009 Analysis									
Count	50	50	50	50	50	50	20	1	50
Average	7.28	**33.5**	**461**	**439**	427	**990**	714	290	2.20
Median	7.28	29.2	462	414	405	978	706	290	2.20
Std Dev	0.11	11.8	138	177	99	254	36		0.35
Percentile	0.85	0.85	0.85	0.85	0.85	0.85	0.85	0.85	0.85
	7.40	50.7	595	623	510	1,222	741	290	2.59
PF (for reference)		1.73	1.29	1.51	1.26	1.25	1.05	1.00	
Yearly Averages									
2005	7.29	50.0	495	433	387	1085			2.22
2006	7.19	42.2	532	347	407	985			1.91
2007	7.36	23.4	403	406	474	878			2.21
2008	7.31	27.8	458	569	416	1076	701		2.38
2009	7.21	31.7	419	439	431	963	733	290	2.35
Sep-07toAug-09		**29.3**							

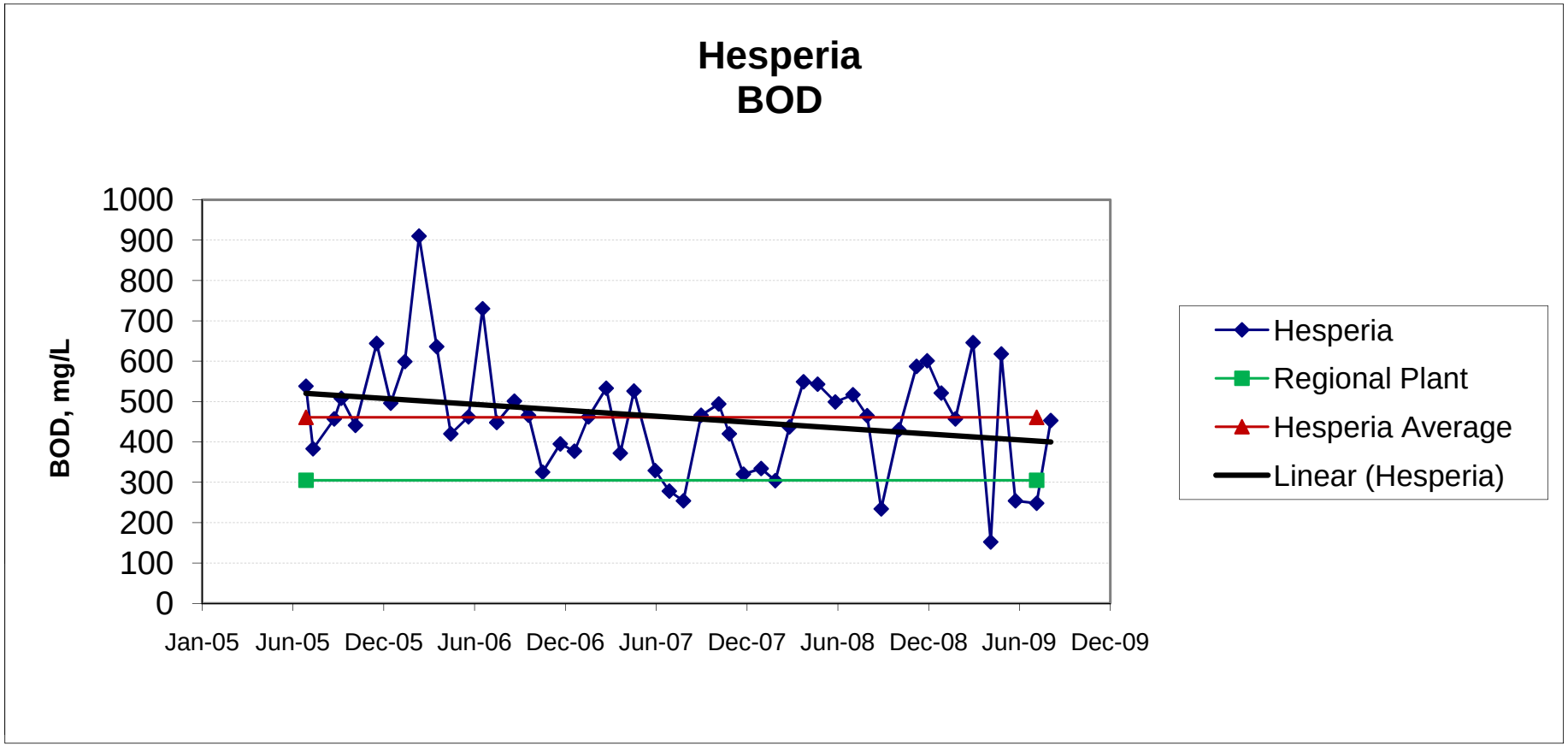
Hesperia
BOD
BOD, mg/L
1000
900
800
700
600
500
400
300
200
100
0
Jan-05
Jun-05
Dec-05
Jun-06
Dec-06
Jun-07
Dec-07
Jun-08
Dec-08
Jun-09
Dec-09
Hesperia
Regional Plant
Hesperia Average
Linear (Hesperia)

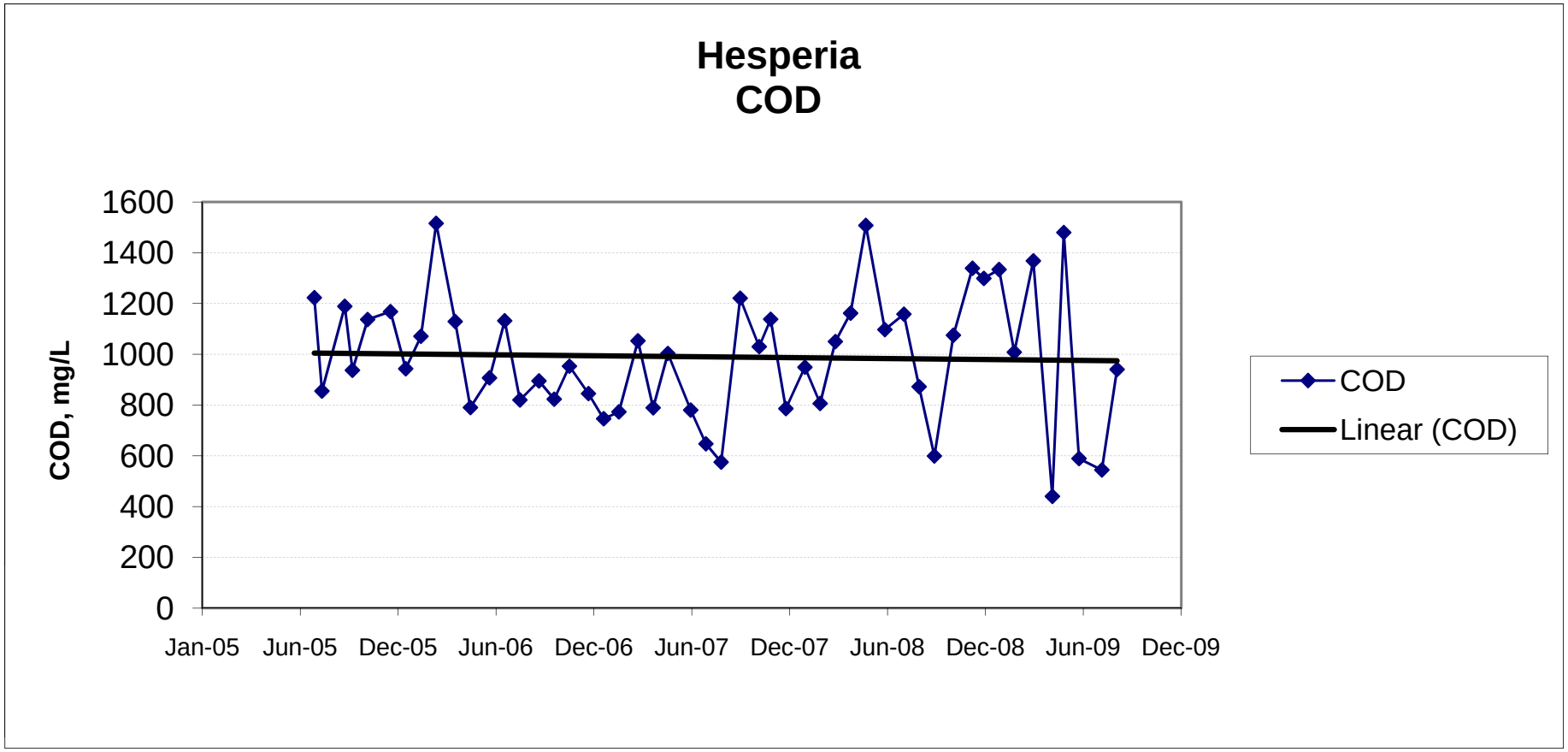
Hesperia
COD
COD, mg/L
1600
1400
1200
1000
800
600
400
200
0
Jan-05
Jun-05
Dec-05
Jun-06
Dec-06
Jun-07
Dec-07
Jun-08
Dec-08
Jun-09
Dec-09
COD
Linear (COD)

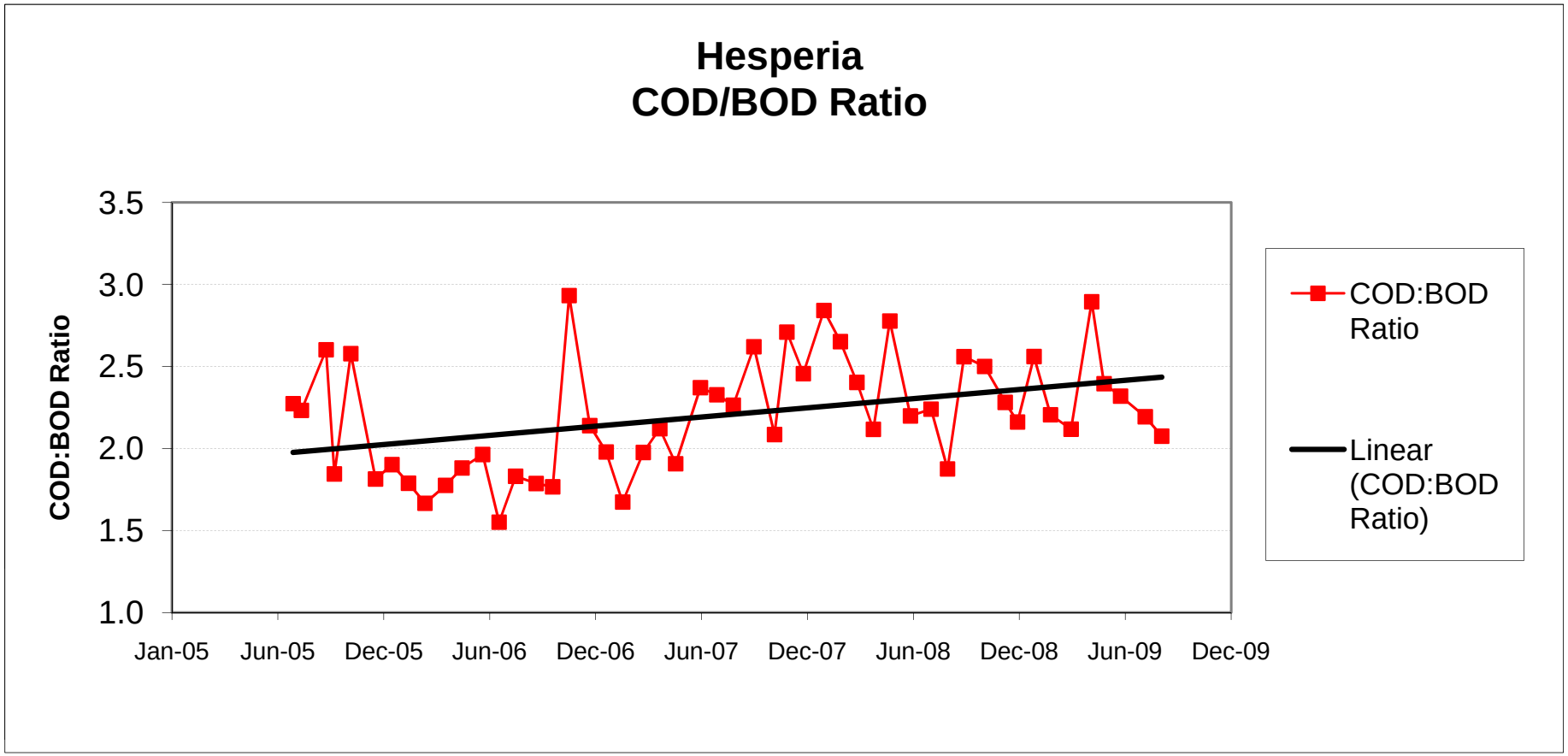
Hesperia
COD/BOD Ratio
COD:BOD Ratio
3.5
3.0
2.5
2.0
1.5
1.0
Jan-05
Jun-05
Dec-05
Jun-06
Dec-06
Jun-07
Dec-07
Jun-08
Dec-08
Jun-09
Dec-09
COD:BOD Ratio
Linear (COD:BOD Ratio)

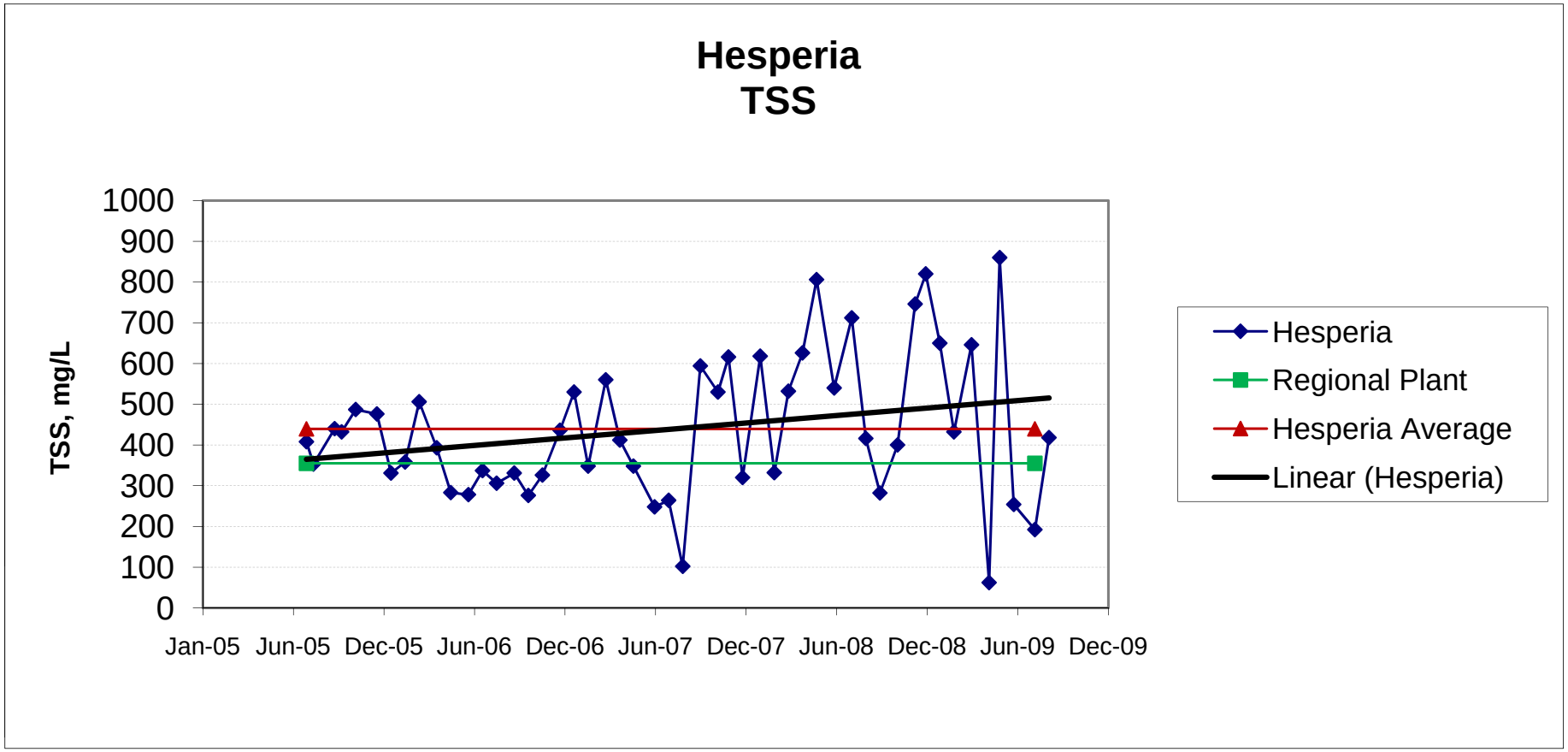
Hesperia
TSS
TSS, mg/L
1000
900
800
700
600
500
400
300
200
100
0
Jan-05
Jun-05
Dec-05
Jun-06
Dec-06
Jun-07
Dec-07
Jun-08
Dec-08
Jun-09
Dec-09
Hesperia
Regional Plant
Hesperia Average
Linear (Hesperia)

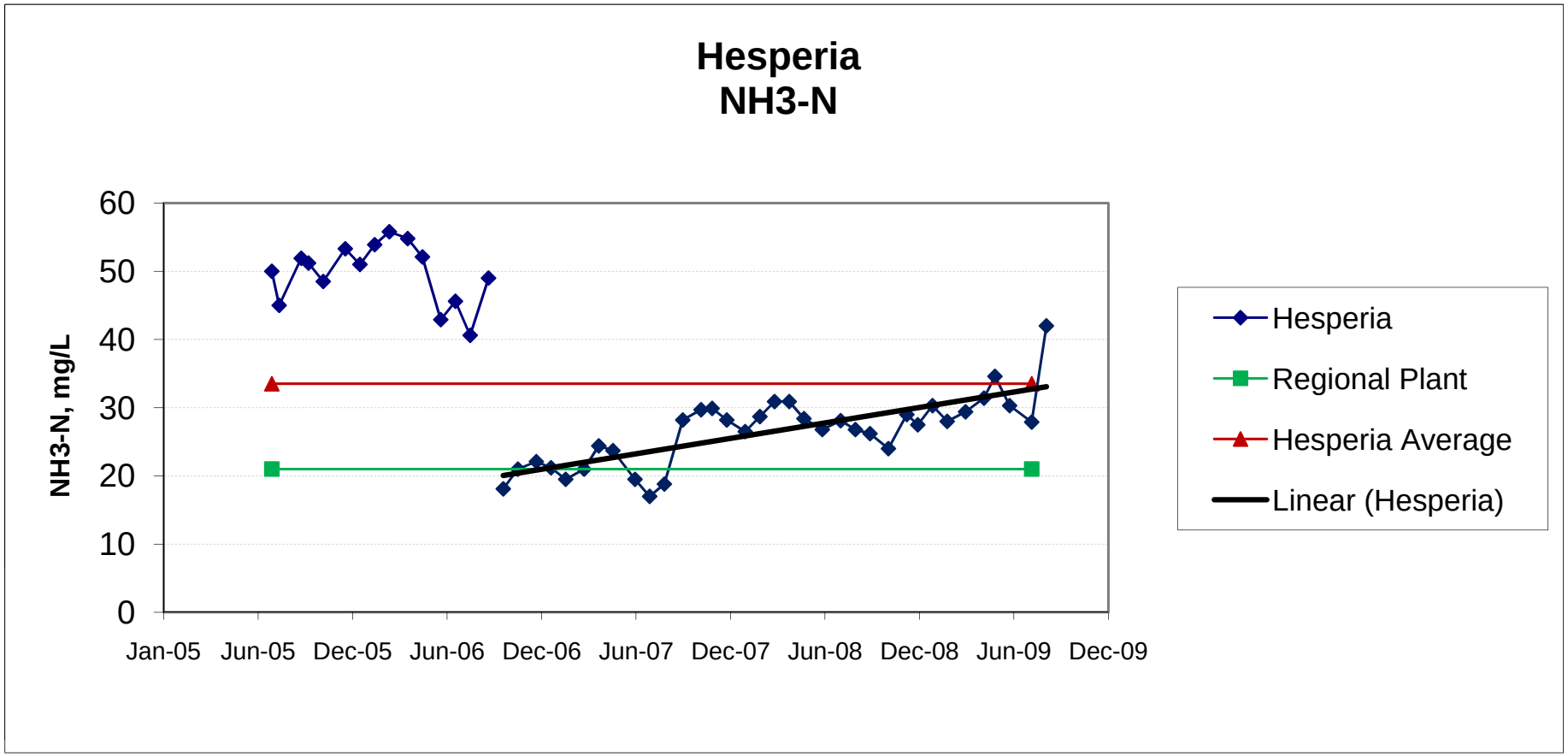
Hesperia
NH3-N
NH3-N, mg/L
60
50
40
30
20
10
0
Jan-05
Jun-05
Dec-05
Jun-06
Dec-06
Jun-07
Dec-07
Jun-08
Dec-08
Jun-09
Dec-09
Hesperia
Regional Plant
Hesperia Average
Linear (Hesperia)

HESPERIA WATER RECLAMATION PLANT

DESIGN INFORMATION MEMORANDUM NO. 2A

PLANT HYDRAULICS

Project Name:	Hesperia and Apple Valley Scalping WRPs, Raw Sewage Lift Station and Force Mains		
Client:	Victor Valley Wastewater Reclamation Authority	**Date:**	December 2009

INTRODUCTION

The Design Information Memorandum (DIM) No. 2A defines the background information and assumptions made for the development of hydraulic profile of the Hesperia Water Reclamation Plant (WRP). The purpose of DIM-2A is to present the preliminary hydraulic profile developed for the Hesperia WRP.

HYDRAULIC PROFILE

A preliminary hydraulic profile was developed for the Hesperia WRP and is shown in Figure 2A.1. Since the WRP is designed as a scalping plant with design capacity of 1.0 mgd in Phase 1 expandable to 2.0 mgd in Phase 2 and 4.0 mgd in Phase 3, the hydraulic profile presents water surface elevations for all phases. The key components of the basis for developing the Hesperia WRP hydraulic profile include the following:

- The ground elevation at the Hesperia WRP site varies from approximately 3,335 feet to 3,343 feet above mean sea level. Assume the finished grade of the proposed plant is at 3,343 feet.
- The existing influent sewer will enter a proposed new lift station wet well (Hesperia Raw Sewage Lift Station). The influent pumps will lift the raw sewage to a water surface elevation of approximately 7 feet above finished grade of the proposed Headworks Building. Raw sewage will flow by gravity through the fine screening units.
- From headworks, the screened influent will flow by gravity through the biological treatment process to the membrane bioreactor (MBR) feed pumps wet well. The mixed liquor will be pumped via MBR feed-forward pumps to the membrane basins. From the MBR basins, permeate will be pumped through the closed-vessel UV disinfection system to the reclaimed water pump station. The return activated sludge (RAS) will flow by gravity back to the biological treatment basins.
- Disinfected reclaimed water will be pumped by the reclaimed water pumps to both an off-site reuse system and on-site plant water system.
- Hydraulic profile was developed for Phase 1 (1.0 mgd), Phase 2 (2.0 mgd) and Phase 3 (4.0 mgd), under the condition of all trains (biological and MBR basins) in service. To represent the possible maximum water surface elevation in the treatment basins under future operation condition, a hydraulic profile was developed for Phase 3 maximum flow capacity of 3.5 mgd (see DIM-6A for plant capacity design redundancy), under one train (biological and MBR basin) out-of-service condition.

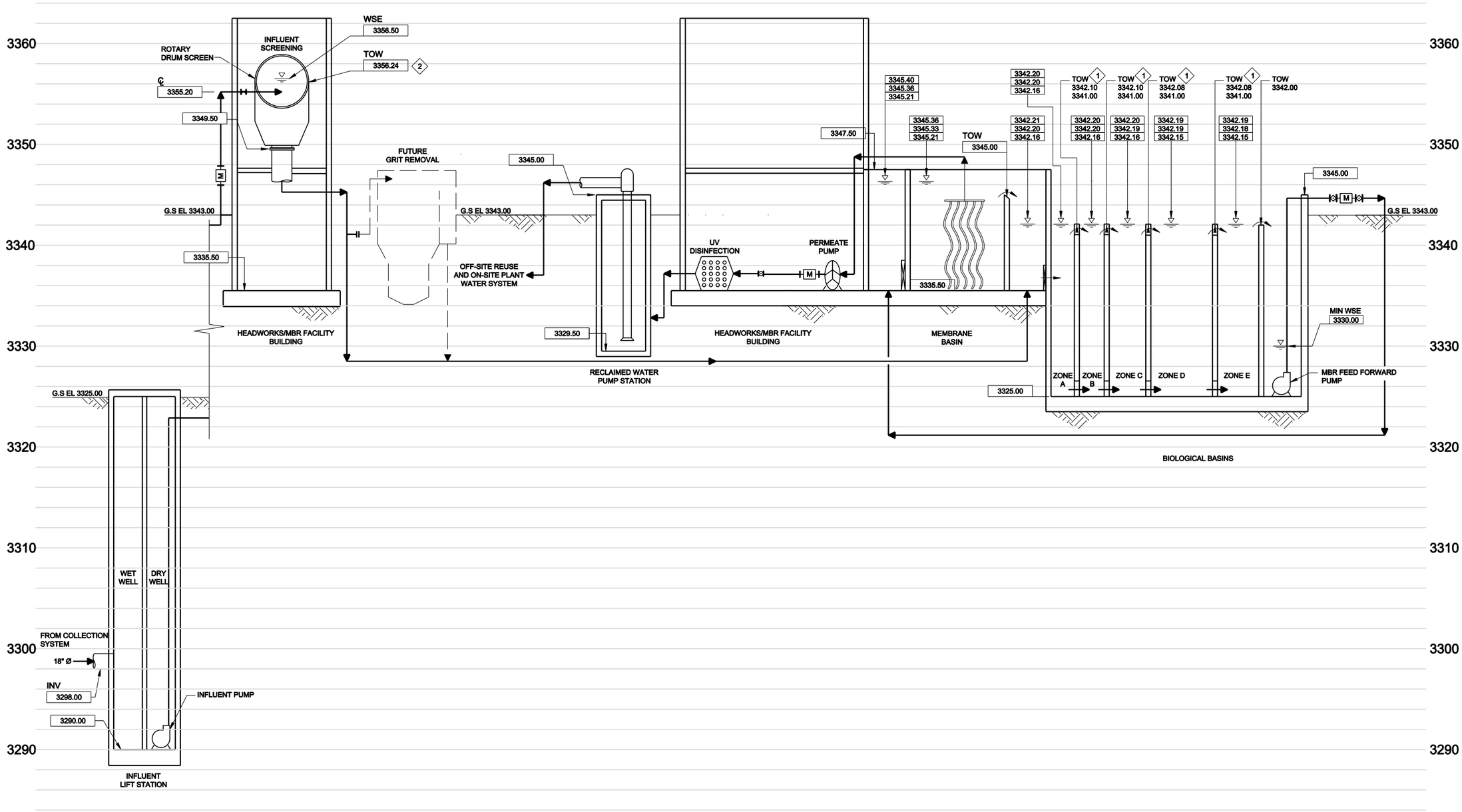

GENERAL NOTES:

1. FINISHED GROUND SURFACE GRADE AT 3343.00 FEET AMSL.
2. RAS RECYCLE FLOW IS 4 TIMES INFLUENT Q

HYDRAULIC PROFILE

HORIZONTAL SCALE: NOT TO SCALE
VERTICAL SCALE: 1" = 5'

KEY NOTES:

1. ELEVATIONS FOR:
   TOP OF BAFFLE WALL AT HIGH SECTION
   TOP OF BAFFLE WALL AT LOW SECTION
2. TOP OF WEIR FOR DRUM SCREEN INFLUENT

LEGEND

W.S. ELEVATION

XX.XX — WATER SURFACE ELEVATION AT PHASE 3 FLOW OF 3.5MGD, ONE TRAIN OUT OF SERVICE
XX.XX — WATER SURFACE ELEVATION AT PHASE 2 FLOW OF 2MGD, ALL TRAINS IN SERVICE
XX.XX — (SAME FOR PHASE 3 FLOW OF 4 MGD, ALL TRAINS IN SERVICE)
WATER SURFACE ELEVATION AT PHASE 1 FLOW OF 1MGD, ALL TRAINS IN SERVICE

VICTOR VALLEY WASTEWATER RECLAMATION AUTHORITY
HESPERIA WRP - PRELIMINARY DESIGN REPORT

HDR

carollo

HYDRAULIC PROFILE

FIG 2A.1

HESPERIA WATER RECLAMATION PLANT

DESIGN INFORMATION MEMORANDUM NO. 3A

PROCESS MODELING

Project Name:	Hesperia and Apple Valley Scalping WRPs, Raw Sewage Lift Station and Force Mains		
Client:	Victor Valley Wastewater Reclamation Authority	**Date:**	December 2009

INTRODUCTION

The Design Information Memorandum No. 1A (DIM No. 1A) defined the design influent flows and loadings and effluent quality criteria for the Hesperia Water Reclamation Plant (WRP), as well as the extent of future plant expansions at the Hesperia WRP site. The purpose of this DIM No. 3A is to present the results of the computerized process model simulations used to design the secondary treatment system for the Hesperia WRP.

PROCESS DESIGN

Figure 3A.1 presents the proposed process flow schematic for the Hesperia WRP. The liquid stream process consists of influent pumping, fine screening, potential future grit removal, activated sludge process, filtration via a membrane bioreactor (MBR) system, ultraviolet (UV) disinfection, and reclaimed water storage and pumping. Waste activated sludge will be pumped to the collection system for treatment at the Westside Water Reclamation Plant (WRP). Detailed descriptions and design criteria for each unit process are included in other DIMs as part of this project. The process design for the activated sludge and MBR system is presented herein.

The main objective of the biological treatment system is to reduce the concentrations of biochemical oxygen demand (BOD), total suspended solids (TSS), and total nitrogen (TN) in the raw wastewater. To achieve such reductions, the Hesperia WRP will utilize a suspended growth, activated sludge system followed by a membrane bioreactor (MBR) to achieve solids-liquid separation.

The activated sludge system is designed to perform nitrification and denitrification in order to achieve effluent TN concentrations below the target limits presented in DIM No. 1A. An initial TN target limit of 8 mg/L (maximum limit of 10 mg/L) was assumed for the design of the secondary treatment system. However, the activated sludge basins were designed with provisions to meet a future TN target limit of 4 mg/L (maximum limit of 5 mg/L) with relatively minor process adjustments.

Process Design for a TN Limit of 10 mg/L

The proposed process to meet a target TN limit of 8 mg/L is the Modified Ludzack-Ettinger (MLE) process coupled with MBR. The MLE process combines an anoxic zone with an aerobic zone in a common basin structure (biological treatment basins). Baffle walls are provided to help with zone separation, in order to minimize short-circuiting and back-mixing. The MLE process also includes a nitrate return, typically via internal mixed liquor recycle from the end of the aeration zone back to the start of the anoxic zone. In an MLE process coupled with MBR,

the return activated sludge (RAS) from the MBR basins also functions as a nitrate return due to the high RAS flow rates required for the operation of the MBR system. Biological treatment in the proposed MLE process includes the following steps:

- Screened wastewater first enters the anoxic zone, where it is mixed with the RAS stream coming from the MBR basins. The combination of wastewater and RAS under anoxic conditions (nitrate, but no dissolved oxygen) promotes denitrification, where microorganisms in the mixed liquor will use nitrate (instead of oxygen) to metabolize the organic material in the wastewater, thereby converting nitrates to nitrogen gas, which is released to the atmosphere.
- In the aerobic zone, influent ammonia is converted to nitrate by nitrifying microorganisms. Carbon oxidation of the waste stream also occurs under aerobic conditions.
- Conversions under aerobic conditions continue in the MBR basins, as aeration is supplied in these basins to control membrane fouling. Membranes provide solids-liquid separation of the mixed liquor, combining clarification and filtration in one treatment step. The RAS return flow from the MBR basins back to the head of the biological treatment process controls the concentration of microorganisms in the activated sludge system, as well as the amount of nitrates returned for denitrification.

The availability of adequate, readily biodegradable carbon is crucial to the denitrification process. Based on the influent wastewater characteristics identified in DIM No. 1A, the average and maximum month BOD:TKN ratios of 10.6:1 and 12.3:1 are considered within a “very good” range of BOD:TKN ratios suitable for a typical MLE process configuration without the need for supplemental carbon addition.

Process Design for a TN Limit of 5 mg/L

The proposed process to meet a target TN limit of 4 mg/L is a four-stage Bardenpho process. This configuration is achieved by modifying the proposed MLE process, retrofitting a post-anoxic zone and an internal mixed liquor recycle stream in the basins proposed to comply with a TN limit of 10 mg/L. The post-anoxic zone is achieved through the inclusion of an aerobic or anoxic “swing” zone located at the end of the biological process basins. The internal mixed liquor recycle is achieved by the addition of pumps to return mixed liquor from the end of the last aerated zone back to the start of the first anoxic zone. Biological treatment in a four-stage Bardenpho process includes the following steps:

- The first anoxic zone receives screened wastewater, RAS from the MBR basins, and nitrified mixed liquor recycled from the end of the aerated zones in the biological process treatment basins. The nitrates returned in the mixed liquor recycle and RAS are denitrified under anoxic conditions. Influent organic matter provides the carbon and energy source for denitrification (conversion of nitrate to nitrogen gas).
- The aerobic zones in the biological process treatment basins provide aerated treatment to achieve nitrification (conversion of ammonia to nitrate) and further reduction of BOD.
- The post-anoxic zone provides additional denitrification using endogenous carbon source (cell material) and nitrates generated in the preceding aerobic zones.
- The MBR basins provide the last aerobic stage of the Bardenpho process. Intermittent aeration is provided for air scouring the membranes, which creates an aerobic environment. Membranes provide solids-liquid separation of the mixed liquor, combining clarification and filtration in one treatment step. The RAS return flow from the MBR basins back to the head of the biological treatment process controls the concentration of

microorganisms in the activated sludge system, as well as a significant portion of the nitrates returned for denitrification in the first anoxic zone.

The integration of a post-anoxic zone between the primary aerobic zones and the aerated MBR basins, coupled with a mixed liquor recycle, is an effective yet cost-effective process strategy to reliably achieve low TN limits.

PROCESS MODELING

Sizing of the biological treatment basins was optimized through the use of process modeling tools including Biotran and BioWin. Biotran is a computer model developed by Carollo for wastewater treatment plant process evaluations. BioWin is a commercially available process modeling software program for the analysis and evaluation of wastewater treatment processes. These programs utilize mass balances, and biological and physical models, to simulate the interactions between the different processes in a wastewater treatment facility. The model is used in conjunction with the wastewater characteristics and design criteria to establish treatment capacities for the different processes, and predict the characteristics of the treated effluent. The models also generate projections for biosolids production, oxygen usage, etc., that can be used to size auxiliary facilities (i.e., blowers, pumps, etc.).

Modeling Scenarios

The biological treatment basins are sized for mass loadings of the different wastewater constituents (BOD, TSS, TKN, etc.) in the plant influent. While the capacity of biological treatment basins is commonly referred to in terms of hydraulic flow (million gallons per day), the capacity is really determined by the constituent loadings (pounds per day). Therefore, the two design conditions considered in sizing the biological treatment basins are the annual average day (AADF) loadings, and the maximum month average day (MMADF) loadings.

The biological process basins were sized to meet the following criteria, based on standard practice for biological treatment basins redundancy:

- Basins sized to treat the design flow at annual average day constituent loadings with one basin out-of-service.
- Basins sized to treat the design flow at maximum month average day constituent loadings with all basins in service.
- Basins sized to achieve an initial target TN concentration of 8 mg/L, and a future target TN concentration of 4 mg/L under both AADF and MMADF loadings. The initial TN permitted limit is anticipated to be 10 mg/L, with the possibility of a future TN limit of 5 mg/L.
- Basins sized for a modular expansion between Phase 1, Phase 2, and buildout.

Process Modeling Results

Sizing of the biological process basins is driven by the wastewater loadings at maximum month average day loading conditions. The basin design incorporates sufficient swing zones to provide flexibility to adapt to future changes in influent wastewater characteristics and future regulations requiring lower effluent TN concentrations.

In order to achieve the anticipated future TN limit of 5 mg/L, a second internal mixed liquor recycle (IMLR) loop is required. In order to provide adequate flexibility for the potential future

lower TN limit without excessive capital expenditures under Phase 1, the basins will be designed such that the second set of IMLR pumps can be efficiently added in the future.

Figure 3A.2 presents the BioWin schematic of the process configuration to meet a TN limit of 10 mg/L. Table 3A.1 presents a summary of the process model simulation results for the secondary treatment process, operated to meet a TN limit of 10 mg/L. Two biological process basins are proposed for Phase 1, with a third basin added in Phase 2, each basin with a total volume of 0.381 million gallons (MG) without counting the volume in the MBR feed forward pump wet well. Two MBR basins are considered in Phase 1, with addition of membrane cassettes under Phase 2. A more detailed description of the basins is included in DIM No. 6A.

Figure 3A.2 BioWin Process Model Flow Schematic for TN Limit of 10 mg/L

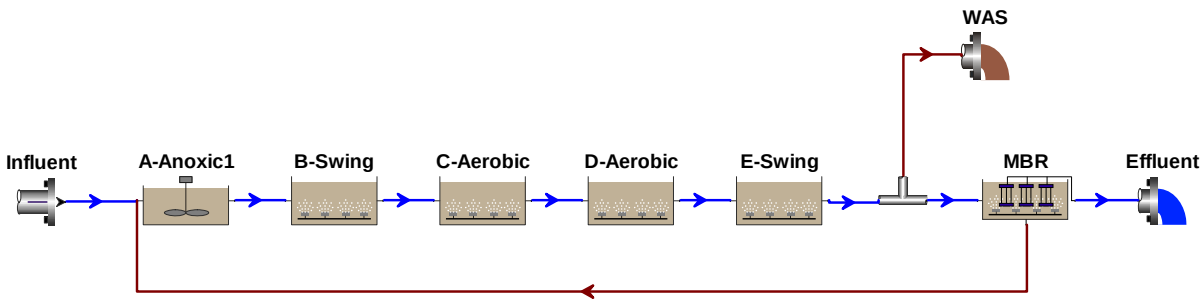

Table 3A.1 Biological Treatment System Design Criteria for TN Limit of 10 mg/L
Hesperia WRP Design Information Memoranda
Victor Valley Wastewater Reclamation Authority, California

Parameter	Unit	Phase 1 (1.0 mgd)	Phase 2 (2.0 mgd)	Buildout (4.0 mgd)
AERATION BASINS				
Type of Basins	-	Single Pass, multiple zones		
Number of Parallel Trains	-	2	3	6
Basin Side Water Depth	ft	17		
Basin Width [(1)], each	ft	20		
Zone Lengths – (Operation) [(1)]				
Zone A – Anoxic	ft	10 (Anoxic)		
Zone B – Swing	ft	10 (Aerobic)		
Zone C – Aerobic	ft	55 (Aerobic)		
Zone D – Aerobic	ft	55 (Aerobic)		
Zone E – Swing	ft	20 (Aerobic)		
Total Basin Length	ft	150		

Table 3A.1 Biological Treatment System Design Criteria for TN Limit of 10 mg/L
Hesperia WRP Design Information Memoranda
Victor Valley Wastewater Reclamation Authority, California

Parameter	Unit	Phase 1 (1.0 mgd)	Phase 2 (2.0 mgd)	Buildout (4.0 mgd)
Basin Volume, each	MG	0.381		
Total Basin Volume	MG	0.763	1.144	2.289
Anoxic Fraction of Total Volume	-	0.067		
Aerobic Fraction of Total Volume	-	0.933		
MLSS Concentration in Biological Basins	mg/L	8,000		
MLSS Concentration in MBR Basins	mg/L	10,000		
Feed Forward Flow	mgd	5.0	10.0	20.0
RAS Return Flow	mgd	4.0	8.0	16.0
Internal Mixed Liquor Return Flow	mgd	-	-	-
Total Solids Retention Time				
MMADF, all basins in service	days	11.6	7.9	7.9
AADF, all basins in service	days	19.4	13.1	13.1
AADF, one basin out-of-service	days	9.0	8.2	10.6
Aerobic Solids Retention Time				
MMADF, all basins in service	days	10.9	7.4	7.4
AADF, all basins in service	days	18.2	12.3	12.3
AADF, one basin out-of-service	days	8.4	7.6	9.9
EFFLUENT NITROGEN				
Effluent Nitrogen, MMADF all basins in service				
Ammonia Nitrogen (NH_4-N)	mg/L	0.25	0.27	0.27
Nitrate-Nitrogen (NO_3-N)	mg/L	3.88	3.10	3.10
Nitrite Nitrogen (NO_2-N)	mg/L	0.05	0.08	0.08
Organic Nitrogen	mg/L	2.61	2.58	2.57
Total Nitrogen (TN)	**mg/L**	**6.79**	**6.03**	**6.04**
Effluent Nitrogen, AADF all basins in service				
Ammonia Nitrogen (NH_4-N)	mg/L	0.18	0.18	0.18
Nitrate-Nitrogen (NO_3-N)	mg/L	4.16	3.74	3.74
Nitrite Nitrogen (NO_2-N)	mg/L	0.04	0.04	0.04
Organic Nitrogen	mg/L	2.21	2.21	2.21
Total Nitrogen (TN)	**mg/L**	**6.58**	**6.18**	**6.18**
Effluent Nitrogen, AADF one basin o.o.s.				
Ammonia Nitrogen (NH_4-N)	mg/L	0.18	0.21	0.19

Table 3A.1 Biological Treatment System Design Criteria for TN Limit of 10 mg/L
Hesperia WRP Design Information Memoranda
Victor Valley Wastewater Reclamation Authority, California

Parameter	Unit	Phase 1 (1.0 mgd)	Phase 2 (2.0 mgd)	Buildout (4.0 mgd)
Nitrate-Nitrogen (NO_3-N)	mg/L	3.30	3.14	3.49
Nitrite Nitrogen (NO_2-N)	mg/L	0.04	0.06	0.04
Organic Nitrogen	mg/L	2.23	2.23	2.21
Total Nitrogen (TN)	**mg/L**	**5.76**	**5.64**	**5.93**
AERATION				
Oxygen Demand (2)	ppd	6,700	12,900	25,700
Estimated Blower Air Requirement (3)	scfm	3,200	7,200	14,400
WASTE ACTIVATED SLUDGE				
Daily Solids at Max. Month Loading	ppd	4,800	10,200	20,300
Daily Solids at Avg. Day Loading	ppd	2,800	6,100	12,100

Notes:
(1) Inside dimensions.
(2) At maximum month average day loadings.
(3) Includes peak day peaking factor of 1.3 over MMADF.

Figure 3A.3 presents the BioWin schematic of the process configuration to meet a TN limit of 5 mg/L. Table 3A.2 presents a summary of the process model simulation results for the secondary treatment process, operated to meet a TN limit of 5 mg/L. The differences with the process configuration for a TN limit of 10 mg/L are the operation of the second swing zone under anoxic conditions, and the addition of a second internal mixed liquor recycle loop.

Figure 3A.3 BioWin Process Model Flow Schematic for TN Limit of 5 mg/L

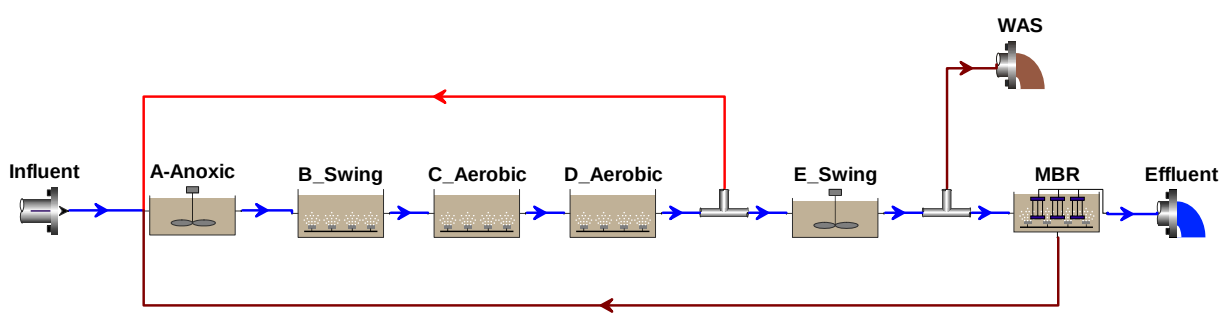

Table 3A.2 Biological Treatment System Design Criteria for TN Limit of 5 mg/L
Hesperia WRP Design Information Memoranda
Victor Valley Wastewater Reclamation Authority, California

Parameter	Unit	Phase 1 (1.0 mgd)	Phase 2 (2.0 mgd)	Buildout (4.0 mgd)
AERATION BASINS				
Type of Basins	-	Single Pass, multiple zones		
Number of Parallel Trains	-	2	3	6
Basin Side Water Depth	ft	17		
Basin Width [(1)], each	ft	20		
Zone Lengths – (Operation) [(1)]				
Zone A – Anoxic	ft	10 (Anoxic)		
Zone B – Swing	ft	10 (Aerobic)		
Zone C – Aerobic	ft	55 (Aerobic)		
Zone D – Aerobic	ft	55 (Aerobic)		
Zone E – Swing	ft	20 (Anoxic)		
Total Basin Length	ft	150		
Basin Volume, each	MG	0.381		
Total Basin Volume	MG	0.763	1.144	2.289
Anoxic Fraction of Total Volume	-	0.20		
Aerobic Fraction of Total Volume	-	0.80		
MLSS Concentration in Biological Basins	mg/L	8,000	8,000 @ AADF 9,000 @ MMADF	
MLSS Concentration in MBR Basins	mg/L	10,000	10,000 @ AADF 11,000 @ MMADF	
Feed Forward Flow	mgd	5.0	10.0	20.0
RAS Return Flow	mgd	4.0	8.0	16.0
Internal Mixed Liquor Return Flow (Zone D to Zone A)	mgd	2.0	4.0	8.0
Total Solids Retention Time				
MMADF, all basins in service	days	11.5	8.8	8.8
AADF, all basins in service	days	18.8	12.8	12.8
AADF, one basin out-of-service	days	9.0	8.1	10.5
Aerobic Solids Retention Time				
MMADF, all basins in service	days	9.4	7.1	7.1
AADF, all basins in service	days	15.2	10.4	10.4
AADF, one basin out-of-service	days	7.4	6.5	8.5

Table 3A.2 Biological Treatment System Design Criteria for TN Limit of 5 mg/L
Hesperia WRP Design Information Memoranda
Victor Valley Wastewater Reclamation Authority, California

Parameter	Unit	Phase 1 (1.0 mgd)	Phase 2 (2.0 mgd)	Buildout (4.0 mgd)
EFFLUENT NITROGEN				
Effluent Nitrogen, MMADF all basins in service				
Ammonia Nitrogen (NH_4-N)	mg/L	0.56	0.86	0.85
Nitrate-Nitrogen (NO_3-N)	mg/L	0.36	0.14	0.15
Nitrite Nitrogen (NO_2-N)	mg/L	0.08	0.08	0.08
Organic Nitrogen	mg/L	2.50	2.39	2.40
Total Nitrogen (TN)	**mg/L**	**3.51**	**3.47**	**3.47**
Effluent Nitrogen, AADF all basins in service				
Ammonia Nitrogen (NH_4-N)	mg/L	0.40	0.57	0.57
Nitrate-Nitrogen (NO_3-N)	mg/L	0.99	0.64	0.64
Nitrite Nitrogen (NO_2-N)	mg/L	0.08	0.08	0.08
Organic Nitrogen	mg/L	2.05	1.98	1.98
Total Nitrogen (TN)	**mg/L**	**3.52**	**3.27**	**3.27**
Effluent Nitrogen, AADF one basin o.o.s.				
Ammonia Nitrogen (NH_4-N)	mg/L	0.40	0.66	0.58
Nitrate-Nitrogen (NO_3-N)	mg/L	0.62	0.32	0.51
Nitrite Nitrogen (NO_2-N)	mg/L	0.08	0.09	0.08
Organic Nitrogen	mg/L	2.18	2.01	1.99
Total Nitrogen (TN)	**mg/L**	**3.20**	**3.09**	**3.17**
AERATION				
Oxygen Demand (2)	ppd	6,200	12,200	24,300
Estimated Blower Air Requirement (3)	scfm	3,000	6,900	13,800
WASTE ACTIVATED SLUDGE				
Daily Solids at Max. Month Loading	ppd	4,800	10,100	20,000
Daily Solids at Avg. Day Loading	ppd	2,900	6,200	12,400

Notes:
(1) Inside dimensions.
(2) At maximum month average day loadings.
(3) Includes peak day peaking factor of 1.3 over MMADF.

SUMMARY AND RECOMMENDATIONS

The recommended redundancy for the aeration basins should allow the plant to reliably meet the effluent quality goals with one biological treatment basin out-of-service when treating annual average day loadings, and meet the same goals when treating maximum month average day loadings with all basins in service.

The recommended MLE process design for the biological treatment process can achieve compliance with a maximum TN limit of 10 mg/L. The recommended basin design allows the inclusion of the necessary provisions to readily accommodate a post-anoxic zone and internal mixed liquor return pumping, in order to achieve compliance with a potential future TN limit of 5 mg/L.

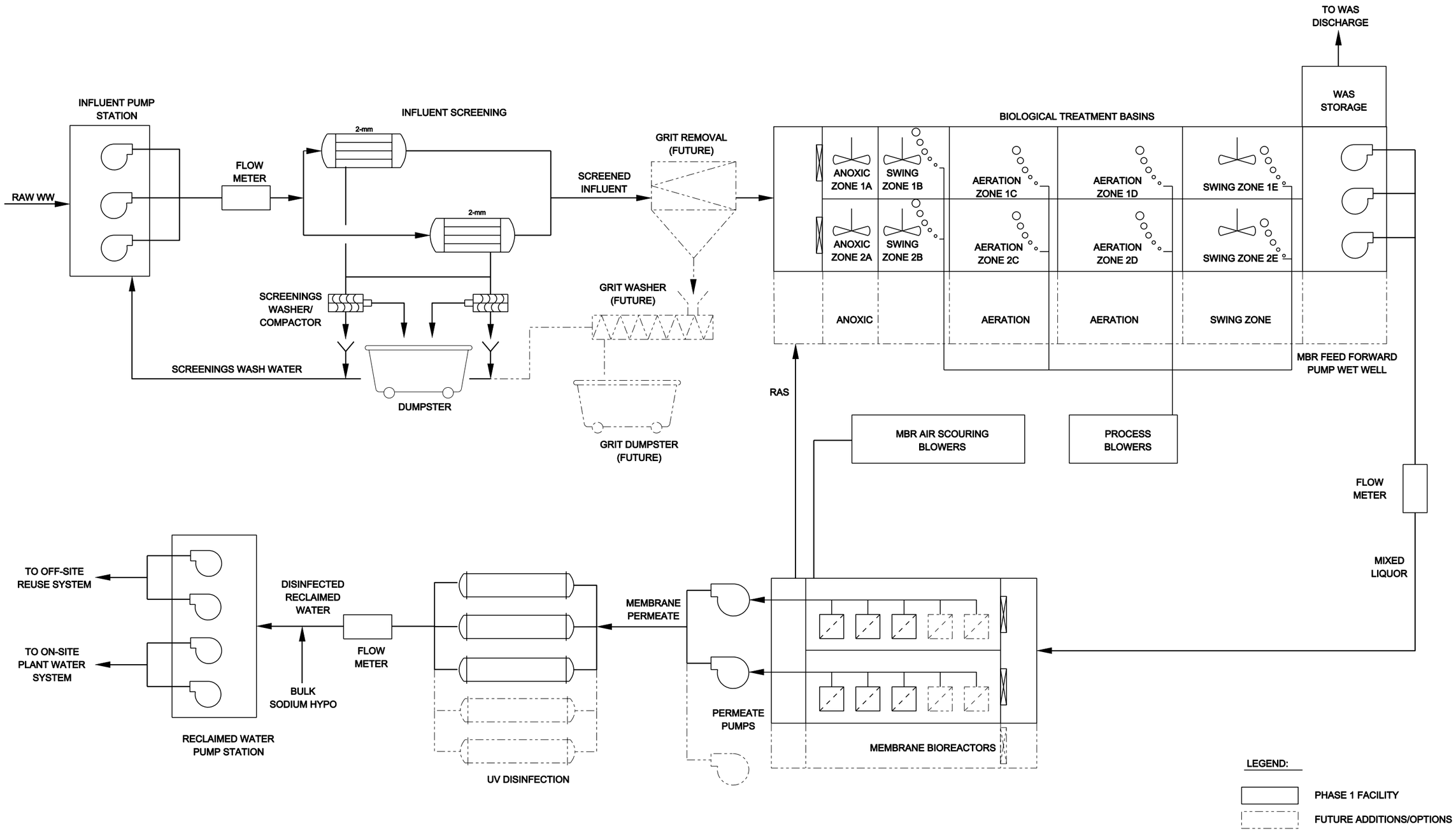

VICTOR VALLEY WASTEWATER RECLAMATION AUTHORITY
HESPERIA WRP - PRELIMINARY DESIGN REPORT

HDR

carollo

PROCESS FLOW DIAGRAM

FIG 3A.1

HESPERIA WATER RECLAMATION PLANT

DESIGN INFORMATION MEMORANDUM NO. 4A
PERMITTING AND EFFLUENT DISPOSAL

Project Name:	Hesperia and Apple Valley Scalping WRPs, Raw Sewage Pump Station and Force Mains		
Client:	Victor Valley Wastewater Reclamation Authority	**Date:**	December 2009

INTRODUCTION

This Design Information Memorandum (DIM) No. 4A describes the regulatory framework and permitting requirements for the proposed Hesperia Water Reclamation Plant (WRP) effluent disposal options. Disposal options include waste disposal with percolation ponds, indirect groundwater recharge, direct groundwater recharge, and incidental groundwater recharge.

DEFINITION OF TERMS

- **Reclaimed water** – water that, as a result of treatment of domestic wastewater, is suitable for direct beneficial use or a controlled use that would not otherwise occur (Title 22).
- **Recycled water** – "water that, as a result of treatment of waste, is suitable for direct beneficial use or a controlled use that would not otherwise occur." The act of reclaiming and using water, otherwise wasted, for beneficial purposes. Synonymous with "wastewater reclamation and reuse". Water recycling includes the process of treating wastewater, storing and distributing the recovered water, and the actual use of the reclaimed water.
- **Wastewater reclamation** – the treatment or processing of wastewater to make it reusable, normally in accordance with regulations established by the California Department of Public Health (CDPH) and the California Regional Water Quality Control Boards (RWQCB).
- **Water reuse** – the intentional or deliberate beneficial use of treated wastewater.
  - **Direct non-potable water reuse** – the use of recycled water where there is a direct link from the treatment system to the reuse application, such as landscape irrigation or other application via a dual distribution system or separate dedicated conveyance line.
  - **Direct beneficial use** (Title 22 term and definition) – use of recycled water that has been transported from the point of production to the point of use without an intervening discharge to waters of the State.
  - **Indirect reuse** – mixing, dilution and dispersion of recycled water by discharge to an impoundment, receiving water or groundwater aquifer prior to reuse, such as in groundwater recharge. Indirect reuse does not normally constitute planned (or deliberate) reuse.
  - **Unplanned (or incidental) reuse** – diversion/extraction from a surface water body or groundwater basin downstream of a treated wastewater discharge. An accepted practice throughout the world for centuries. Example: riverbed or percolation pond recharge of an underlying groundwater aquifer with a blend of runoff, natural flows

and treated wastewater, which in turn, is withdrawn by down-gradient users for domestic or industrial water supplies. In the Mojave Basin, nearly all wastewater effluent is incidentally recycled in this manner.
  - **Direct potable water reuse** – deliberate/planned/intentional use of highly treated recycled water to augment drinking water supplies, i.e. incorporation of recycled water into a potable water supply system, *without* relinquishing control over the resource (e.g., Occoquan Reservoir, Virginia).
  - **Indirect potable water reuse** – addition of an intermediate step in the hydrologic cycle whereby recycled water is mixed with surface or groundwater sources prior to drinking water treatment (e.g., Orange County Water District Project).
  - **Non-potable water reuse** – all water use applications other than drinking water supplies; the dominant mode of wastewater reuse throughout the world.
- **Intentional (artificial) groundwater recharge** – augmentation of the natural movement of surface water into underground formations either directly (e.g., injection well) or indirectly (e.g., percolation basin or infiltration gallery).
  - **Direct artificial groundwater recharge** – water introduced into an aquifer via injection wells.
  - **Indirect artificial groundwater recharge** – spreading surface water on land so that it infiltrates through vadose zone (the unsaturated layer above the water table) down to the aquifer; methods include over-irrigation, construction basins, or making artificial changes to natural conditions (e.g., modifying a stream channel such as the Santa Ana River).
- **Incidental (unintentional) groundwater recharge** – the unplanned or indirect infiltration of water to an aquifer from agricultural or landscape irrigation or discharge to a stream or river (e.g., Mojave River).

REGULATORY FRAMEWORK

The overall regulatory framework associated with wastewater reclamation and water reuse is described below. The framework is organized into three levels: federal, state, and local.

Federal

State of California recycled water regulations are influenced by federal regulatory policies and guidelines. The three federal agencies most involved in water management issues are the U.S. Environmental Protection Agency (USEPA), U.S. Army Corps of Engineers (USACOE) and U.S. Bureau of Reclamation (USBOR). The USEPA is responsible for administration of the Clean Water Act, provides National Pollutant Discharge Elimination System (NPDES) oversight, guidelines, and has advisory roles for reclamation and reuse issues. The USACOE is responsible for wetlands protection, enhancement and development using recycled water. The USBOR is responsible for water resource management improvement programs, which include identification and investigation of water reclamation and reuse opportunities in the western U.S. The USBOR also participates in the construction of identified regional water recycling projects and development of water conservation programs involving reuse.

State

The regulatory burden for wastewater reclamation and water reuse in the U.S. rests primarily with states. Regulation of water recycling in California is the responsibility of two agencies, the State Water Resources Control Board (SWRCB) and the California Department of Public Health (CDPH). Waste discharge requirements (WDR) are issued to treated wastewater dischargers by one of nine Regional Water Quality Control Boards (RWQCB). WDR can be used in conjunction with NPDES permits or water recycling requirements (WRR). WDR/WRR permits include water quality and public health protections that incorporate standards found in Title 22 (Water Recycling Criteria) of the California Code of Regulations. A single discharger may necessitate both NPDES and WRR permits to cover seasonal or continuous disposal of a portion of the effluent and water recycling of the other portion.

State recycled water use regulations can be adapted for specific applications and revised for new users. The CDPH has the authority and responsibility to establish health-related standards for production and use of recycled water. The California Water Code provides for the nine RWQCB to establish water quality control plans, which are developed to protect both surface water and groundwater, and to prescribe and enforce WRR (in conjunction with CDPH). The RWQCB has the regulatory responsibility for water recycling projects and programs in whose jurisdiction the wastewater reclamation plant and/or use sites are located.

The legal context of recycled water regulations in California involves overlapping public health, water quality, water conservation, and water rights issues. Water recycling in California is accomplished with the involvement of numerous entities at all levels of government and, in some cases, investor-owned utilities. Water supply and wastewater districts are primarily responsible for the planning, design, and implementation of local recycled water projects.

WDR/NPDES Permits

As previously stated, WDR can be used in conjunction with NPDES permits. The NPDES program developed by USEPA is a permitting program related to wastewater discharge under the Clean Water Act (CWA). Under this program, any facility discharging pollutants from any point source (including man-made conveyance structures such as a pipe or ditch) into waters of the U.S. must obtain a permit. The primary purpose of the program is to ensure that surface water discharge protects the water quality standards and anticipated and designated uses of those waters. The federal NPDES program has been delegated to California and is administered by the RWQCB; however, NPDES permits must receive federal review.

The NPDES permits are provided here for information only. NPDES permit will not be pursued for this project.

WDR/WRR Permits

The RWQCB may prescribe WDR and WRR where recycled water is used, or proposed to be used, if it determines it is necessary to protect public health, safety, or welfare (Water Code S.13523). WDR/WRR permits are not part of the NPDES program and do not receive federal review. Where recycled water criteria have been established by CDPH, no person or entity may either reclaim wastewater or use it until the RWQCB has either issued WRR or waived the necessity for such requirements (Water Code S.13524). This issuance of WRR is done in consultation with CDPH and with consideration of their recommendations.

Master Permits

The RWQCB historically issued permits with WDR for producers of recycled water (agencies) and permits with WRR for end-users. For reasons of efficiency, economy, and control, a “master permit” was developed to bring recycled water production, distribution and use under one regulatory document, typically issued to the agency that produces the recycled water. A single retail water purveying agency (with its own treatment plant) that produces and distributes recycled water to its own customers can be issued a master permit with resulting regulatory benefits.

Water Rights

Water rights are legally defined as the right to use water, which is different than ownership. A state typically retains ownership of water within its boundaries, and water rights laws govern the rights of government and private entities to use such water for recreation, irrigation and other activities. Water rights laws are of particular interest to recycled water projects because they can either promote or restrain water reuse depending on how the state views the use and return of recycled water. California law explicitly states that recycled water, where available and economically justified, must be used in lieu of potable water for meeting non-potable needs.

Most water rights issues are decided according to state law. However, in some cases, federal law may also impact planning of water reuse projects. This typically occurs when the project affects more than one state, region, or protected Native American tribe. The federal government may also claim jurisdiction in disputes between states regarding allocation of limited water supplies.

Local

Federal and state laws, regulations and policies do not prescribe requirements for implementation of water reuse programs and water recycling projects at the local level. Federal and state regulations generally acknowledge the importance of local program flexibility necessary to manage recycled water as a water resource. Local programs have the flexibility as well as broad authority needed to protect the health, welfare, and safety of their customers.

METHODS OF DISPOSAL

The primary reuse option is to supply recycled water to end-users for agriculture and landscape irrigation. This will require a recycled water program, which includes a Recycled Water Master Permit, establishment of an Ordinance, end-user letters of commitment, construction of a recycled water distribution system, and a site conversion program. The alternative disposal options described below provide for disposal of treated wastewater when distribution to end-users is not available. The selected disposal method will be relied upon during the interim period after the Hesperia WRP is constructed and when the recycled water program is established. Table 4A.1 summarizes the disposal methods described below and their respective permitting requirements.

An additional scenario becomes available after the recycled water program is established. Design of the recycled water distribution system should account for seasonal variations in recycled water demand and provide for storage to offset both diurnal and seasonal variations. A storage system that is sized to account for potential use scenarios could allow for no disposal of recycled water.

Table 4A.1 Agencies Involved in the Permitting of Recycled Water Reuse and Effluent Disposal
Hesperia WRP Design Information Memoranda
Victor Valley Wastewater Reclamation Authority, California

Item	RWQCB	CDPH	DOFG	Federal (1)
Waste Disposal (Percolation Ponds)	X			
Indirect Groundwater Recharge (Percolation Ponds)	X	X		
Direct Groundwater Recharge (Injection Wells)	X	X		
Incidental Groundwater Recharge (Mojave River)	X		X	X

Note:

(1) Federal involvement will vary based on the disposal option, but may include federal review of NPDES and NEPA documentation (USEPA), U.S. Fish and Wildlife Service, and U.S. Army Corps of Engineers.

Waste Disposal (Percolation Ponds)

Disposal of treated wastewater to percolation ponds can be accomplished by identifying percolation as a treatment process for waste disposal. This characterization would require coordination with the RWQCB and a permit (WDR).

The RWQCB have recently become more concerned with the impacts of using percolation ponds for waste disposal on the groundwater table. They have begun imposing stricter discharge standards in WDR, including requirements for nutrient removal and restrictions on disinfection by-products. The requirements are likely to be similar to recent permit revisions issued to the VVWRA Westside WRP and other inland utilities. More stringent water quality requirements would entail more advanced treatment processes and more involved monitoring.

The conceptual sizing of percolation ponds for the Hesperia WRP is approximately 16 acres and provides approximately 12 acres of usable land for percolation. Based on percolation rates established for other sites of similar soil characteristics (sandy soil), it is estimated that approximately 1 acre of percolation area will be required for the proposed 1 mgd treatment plant. See Figure 4A.1 for the proposed conceptual location and an example pond layout to maximize land use. In addition, percolation could be achieved at the WRP work site as an option in short term.

Indirect Groundwater Recharge (Percolation Ponds)

Use of percolation ponds for indirect (artificial) groundwater recharge would require coordination with the RWQCB with consultation from CDPH. Approval from the RWQCB would entail water quality requirements based on spreading area operations, soil characteristics, hydrogeology, residence time, and distance from nearest withdrawal point. It would likely require advanced treatment of tertiary effluent (such as reverse osmosis, RO), potential supplementation of injected water with potable water, environmental permitting and monitoring, and an environmental impact report (CEQA documentation).

There may be water rights issues associated with groundwater recharge if it is determined that recharge of the aquifer will impact the quantity or quality of the established users of the aquifer. The potential impacts of mitigating water rights considerations would need to be evaluated further.

Direct Groundwater Recharge (Injection Wells)

Direct groundwater recharge through the use of injection wells provide the advantage of reduced land area requirements, but impose more stringent water quality requirements. Approval and water quality requirements for indirect groundwater recharge typically assume a credit for the soil "barrier" between the percolation pond and the aquifer. Injections wells eliminate this credit, resulting in requirements for more advanced treatment and more stringent parameter compliance in addition to more complicated monitoring.

Incidental Groundwater Recharge (Mojave River)

The permitting requirements for direct discharge to the Mojave River would likely be similar to the requirements imposed on the Westside WRP. This option will require coordination with the RWQCB for an NPDES permit with review, consultation and input from USEPA and the Department of Fish and Game (DOFG). In addition, there may be water rights issues related to adding a new flow to the Mojave River, because it may impact the quantity or quality of established users.

CONCLUSIONS AND RECOMMENDATIONS

The permitting requirements for each alternative present unique challenges. Table 4A.1 provides a summary of the alternative disposal options when direct non-potable reuse is not available; they include disposal through percolation ponds, indirect groundwater recharge, direct groundwater recharge through injection wells, and incidental groundwater recharge (discharge to Mojave River). Given the permitting requirements for each option, waste disposal through percolation ponds appears to offer the greatest benefit. The increasing concern over the impact of waste disposal through percolation ponds will likely increase the water quality requirements and should be considered in the planning and design of the proposed treatment plant. The actual acreage required for the percolation ponds will be determined once the necessary geotechnical and hydrogeological investigation for the proposed disposal site is complete.

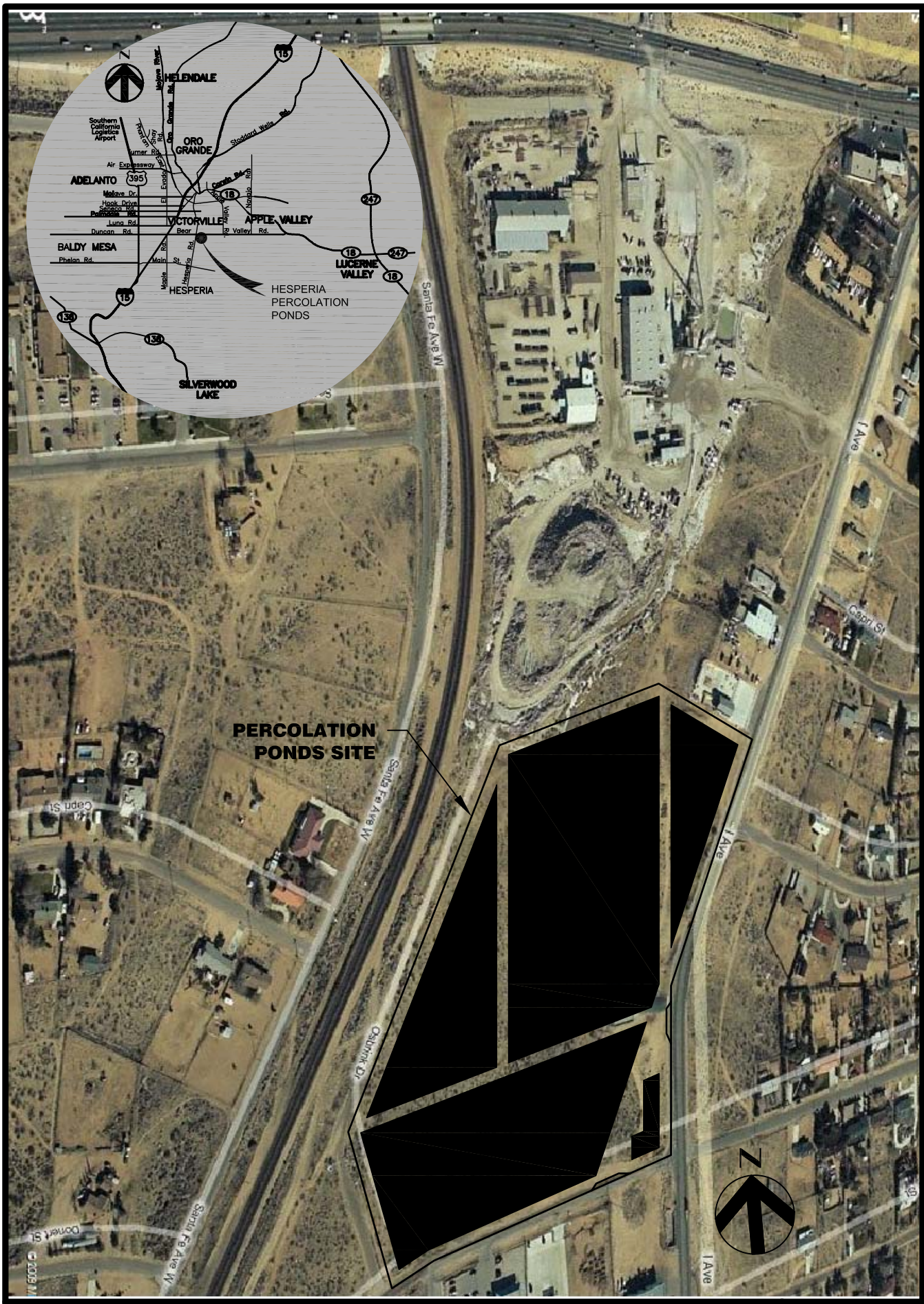

VICTOR VALLEY WASTEWATER RECLAMATION AUTHORITY
HESPERIA WRP - PRELIMINARY DESIGN REPORT

HDR

carollo

HESPERIA WATER RECLAMATION PLANT
PERCOLATION PONDS SITE

FIGURE 4A.1

HESPERIA WATER RECLAMATION PLANT

DESIGN INFORMATION MEMORANDUM NO. 5A

PRELIMINARY TREATMENT

Project Name:	Hesperia and Apple Valley Scalping WRPs, Raw Sewage Lift Station and Force Mains		
Client:	Victor Valley Wastewater Reclamation Authority	**Date:**	December 2009

INTRODUCTION

Raw wastewater from the influent pump station must be screened prior to entering the biological treatment process to remove items such as rags, fibers, and other large debris.

The Hesperia WRP will be equipped with membrane bioreactor (MBR) technology and therefore pre-membrane fine screening will be required to protect the membranes from damage by debris and to optimize membrane performance. The purpose of this DIM-5A is to summarize the proposed preliminary treatment requirements of the Hesperia WRP.

PROCESS EQUIPMENT

Influent Screening

A wide variety of coarse and fine screens is available for preliminary treatment depending on the degree of removal desired. Coarse screens generally have openings greater than 1/2 inch, and allow more rags and solids to pass through. Fine screens have openings less than 1/2 inch and generally remove a greater degree of smaller debris. Screening options typically used for wastewater pretreatment include in-channel screens, traveling band screens, and internally fed rotating drum screens.

Based on the recommendation of potential MBR manufacturer (GE/Zenon), the pre-membrane screening should be fine screen, typically internally fed rotating drum type. The fine screening should be equipped with perforated plate style drum screen (in lieu of a wedge wire and other configuration) to better screen the stringy or fibrous material that could collect in the MBR basins. These fibers could ultimately tangle around membrane fibers, affecting the operation of the system and the life span of membranes.

Based upon the information presented and decisions made at the June 11, 2009 Technical Workshop, a single stage 2-mm micro screen approach will be used. Two units (one operating, on standby) will be provided for Phase 1 (1.0 mgd) and Phase 2 (2.0 mgd).

Screenings Washer/Compactor

The screenings captured in the fine screens contain putrescible organic matters. Therefore, a screenings washer/compactor will be provided for each drum screen unit to break up and remove the organic matter in the screenings, and compress and dewater the washed screening prior to discharge to a dumpster. A screw type washer/compactor will be provided for washing and dewatering screen solids removed by the screens. Screenings wash water will be discharged to a drain for return back into the biological process.

Headworks Odor Control System

The influent screening equipment and screening dumpsters will be housed in a building. Foul air will be withdrawn and routed to an odor control facility. Typical odor control options include chemical scrubber, carbon absorber, and biofilter. Two technologies are proposed for the proposed Headworks Building odor control system:

- Low-profile wet chemical scrubber
- In-ground biofilter

Low-Profile Wet Chemical Scrubber

Wet chemical scrubbing relies on transferring vapor phase odorants from foul air to scrubbing solutions via absorption and chemical oxidation. Wet chemical scrubbers are capable of handling large air flow rates and high intensity odor, and are typically used at wastewater treatment plants. They can be single or multi-stage systems that use absorption and oxidation to remove air contaminants.

The advantages of wet chemical scrubber odor control include removal of high odor concentrations and air flows, as well as removal of a wide variety of odor-causing compounds. The disadvantages of this method include high chemical and power consumption, high maintenance costs, and potential for chlorinated compounds and bleach odor emission.

In-Ground Biofilter

Biofilter bed consists of natural media (soil, compost, peat, or mixture of variety materials) with indigenous microorganisms that can grow on the media surface and metabolize odorous compounds absorbed/adsorbed from the gas stream. Biofilter uses absorption/adsorption and biooxidation mechanisms to remove odorants from foul air. Biofilters can be modular or in-ground type, and are typically used for low to moderate odor air volumes.

The advantages of biofilter odor control include degradation of odor compounds, low energy requirements, and no chemical addition. The main disadvantage of using biofilters is the large land area for installation and the requirement of maintenance of media for moisture content.

Based on discussions with VVWRA representatives, an in-ground biofilter will be provided for the Headworks Building odor control at the Hesperia WRP. In-ground biofilters consist of a network of perforated lateral piping within a layer of drain rock, covered with a screening material and overlaid by a layer of porous filter media. The soil biofilter is usually equipped with an irrigation system to keep the bed moist, and a drainage system to remove any accumulated moisture. Foul air will pass through soil beds. Moistened soil provides contact surfaces for microbial reactions to oxidize odorants.

Based on the preliminary Headworks Building size, assuming loading rate of 2.7 cubic feet per minute per square foot (cfm/sf) of soil bed area, the preliminary in-ground biofilter size will require a land area of approximately 35 feet x 35 feet for Phase 1 (1.0 mgd) and Phase 2 (2.0 mgd).

PROCESS LAYOUT

The influent screens, screenings washer/compactors and dumpsters will be located in the upper level of the proposed Headworks Building. Preliminary headworks layout and sections are presented in Figures 5A.1 and 5A.2.

SUMMARY AND RECOMMENDATIONS

The preliminary treatment at the Hesperia WRP will consist of the following components:

- Two 2-mm rotary drum screens. To reduce long-term capital costs of expanding the WRP from 1.0 mgd to 2.0 mgd, it is proposed to install 2.0 mgd screens, rather than 1.0 mgd screens.
- One screenings washer/compactor will be provided for each screen.
- In-ground biofilter for Headworks Building odor control.

The recommended influent screening design criteria for the Hesperia WRP is summarized in Table 5A.1.

Table 5A.1 Influent Screening Recommended Design Criteria
Hesperia WRP Design Information Memoranda
Victor Valley Wastewater Reclamation Authority, California

Parameters	Phase 1 (1 mgd)	Phase 2 (2 mgd)	Buildout (4 mgd)
Screen Type	Rotary drum, perforated plate		
Stage of Screening	1 stage		
Perforation Diameter, mm	2		
Screen Capacity, mgd, each	2.0		
Number of Screens	2 (1 duty; 1 standby)		3 (2 duty; 1 standby)
Number of Washer/Compactors	2 (1 duty; 1 standby)		3 (2 duty; 1 standby)
Type of Washer/Compactors	Screw type		
Type of Odor Control	In-ground biofilter		

Grit removal is not provided in the preliminary design for Phase 1, other than what will be removed via the fine screening processes. Provisions for future grit removal (i.e. physical space on the plant as well as sufficient hydraulic head in the plant hydraulic profile) will be provided.

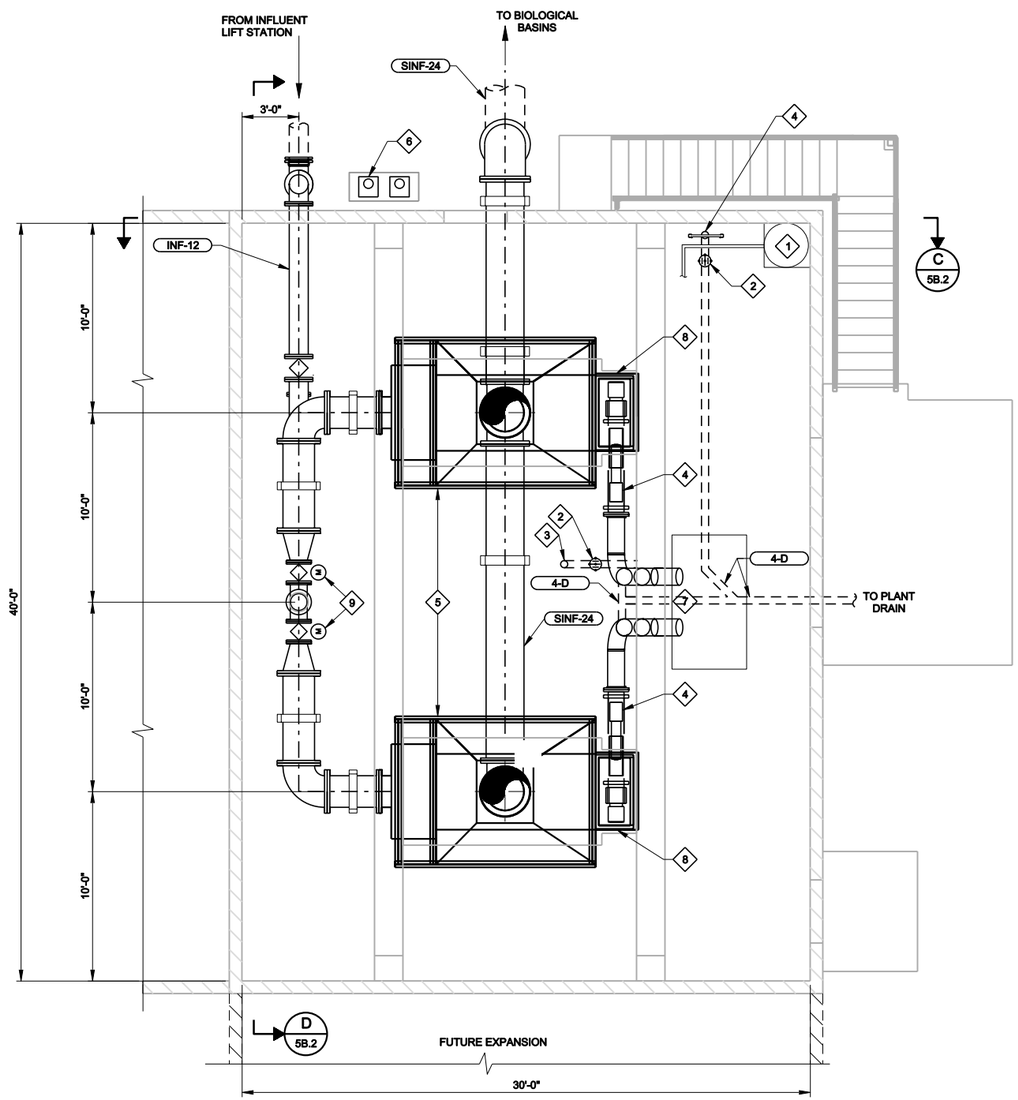

B PLAN
SCALE: 1/4" = 1'-0"
FILE: 7986A10-M-04-101

0 2' 4' 8'

NORTH

KEY NOTES:

1. ELECTRIC WATER HEATER
2. FLOOR DRAIN
3. FLOOR CLEAN OUT
4. SCREENINGS COMPACTOR
5. ROTARY DRUM FINE SCREEN(S)
6. FINE SCREENS LUBE OIL PUMPS AND MOUNTING PAD.
7. 3CY DUMPSTER
8. BARREL SCREEN DISCHARGE CHUTE FLANGE BELOW
9. MOTOR OPERATED 12" ECC PLUG VALVE

VICTOR VALLEY WASTEWATER RECLAMATION AUTHORITY
HESPERIA WRP - PRELIMINARY DESIGN REPORT

HDR

carollo

INFLUENT SCREENING PLAN

FIG 5A.1

KEY NOTES:

1. ROTARY DRUM FIRE SCREEN
2. SCREENINGS WASHER/COMPACTOR
3. COMPACTOR DISCHARGE PIPING AND COLLECTIONS DUMPSTER.
4. 316 STAINLESS STEEL SOLIDS DISCHARGE CHUTE
5. 8" MAGNETIC FLOWMETER
6. FLOOR CLEAN OUT (4"Ø)
7. 12" x 8" REDUCER

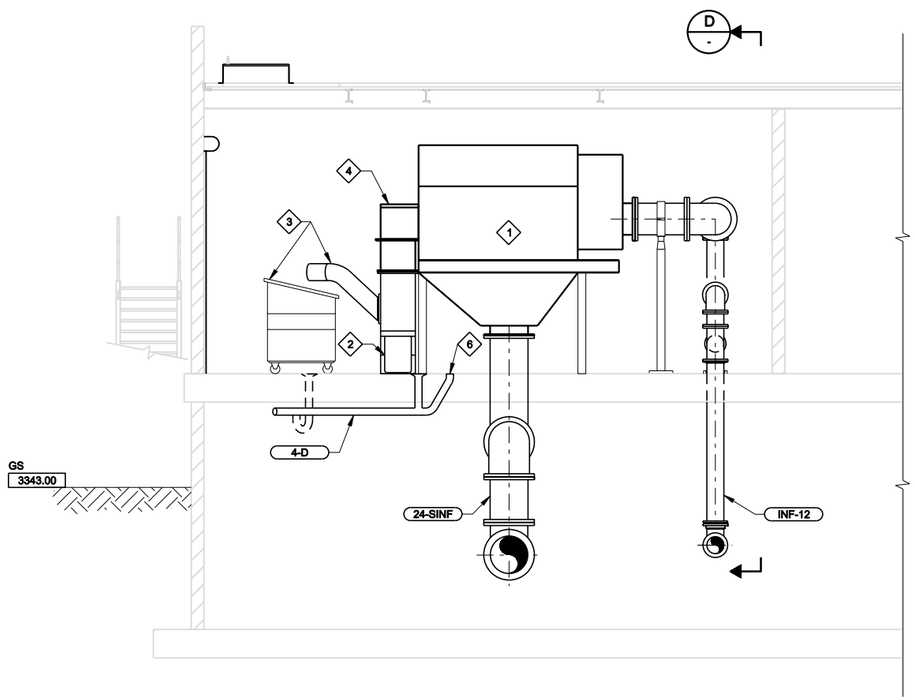

C 5B.1 **SECTION**
SCALE: 1/4" = 1'-0"
FILE: 798610-M-04-301.dgn
0 2' 4' 8'

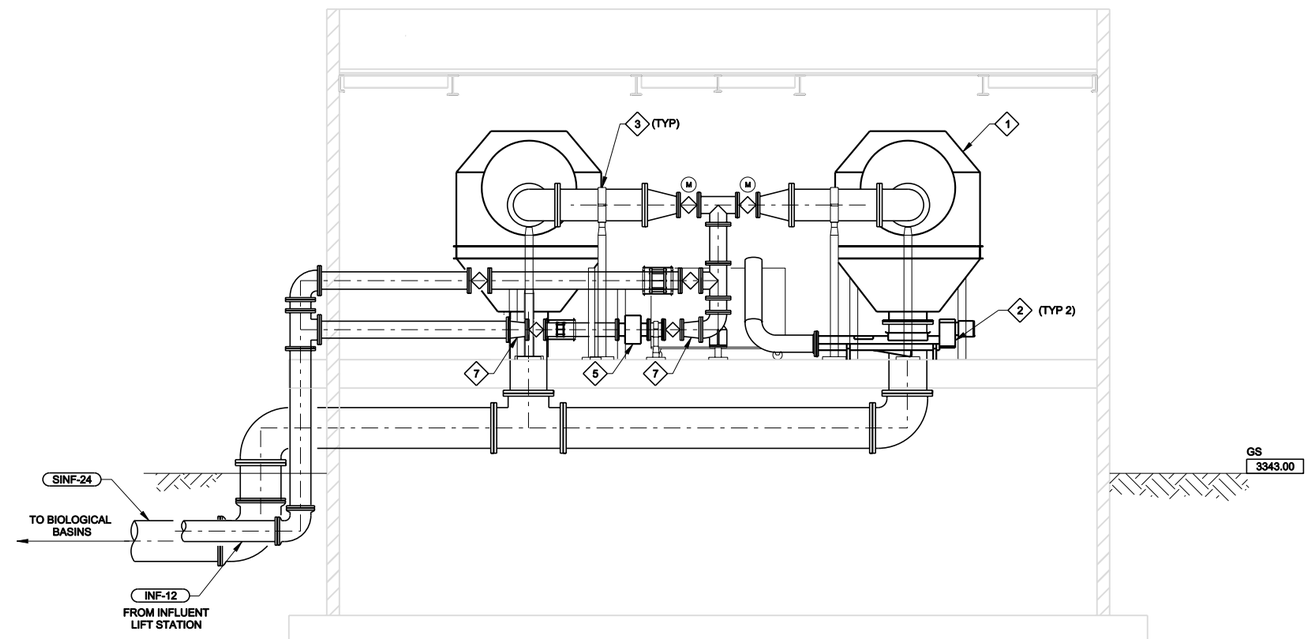

D 5B.1 **SECTION**
SCALE: 1/4" = 1'-0"
FILE: 798610-M-04-301.dgn
0 2' 4' 8'

VICTOR VALLEY WASTEWATER RECLAMATION AUTHORITY
HESPERIA WRP - PRELIMINARY DESIGN REPORT

HDR

carollo

INFLUENT SCREENING SECTIONS

FIG 5A.2

HESPERIA WATER RECLAMATION PLANT

DESIGN INFORMATION MEMORANDUM NO. 6A

SECONDARY TREATMENT AND MEMBRANE FILTRATION

Project Name:	Hesperia and Apple Valley Scalping WRPs, Raw Sewage Lift Station and Force Mains		
Client:	Victor Valley Wastewater Reclamation Authority	**Date:**	December 2009

INTRODUCTION

The biological treatment process is designed to remove biodegradable organic matter, suspended solids, and nutrients from the screened influent wastewater flow. Many different biological wastewater treatment technologies exist, and they represent a wide range of potential effluent quality, operational complexity, and capital cost.

As requested in the Request for Proposal (RFP) for this project, secondary/tertiary treatment at the Hesperia Water Reclamation Plant (WRP) will consist of an activated sludge process for biochemical oxygen demand (BOD) reduction and nutrient removal, coupled with membrane bioreactor (MBR) technology for solids-liquid separation. Design flows are 1.0 million gallons per day (mgd) for Phase 1, 2.0 mgd for Phase 2, and 4.0 mgd for buildout. Process modeling results for the proposed design are presented in DIM No. 3A, and include the basis of design for the secondary treatment process. This DIM No. 6A presents the process description and design criteria for the secondary treatment and membrane filtration facilities at the Hesperia WRP.

PROCESS DESCRIPTION

The MBR process was selected by VVWRA for the new Hesperia WRP. The MBR process combines the biological treatment process with membrane filtration to achieve secondary treatment and advanced filtration. This MBR configuration replaces the function of secondary clarifiers and granular media or cloth disk filtration in a conventional wastewater treatment process.

The biological nutrient removal (BNR) process is a critical component of the overall treatment system. As described in DIM No. 3A, a Modified Ludzack-Ettinger (MLE) process coupled with a MBR system is recommended to achieve a Total Nitrogen (TN) limit of 10 milligrams per liter (mg/L). The biological treatment process basins for the Hesperia WRP also are designed to accommodate a four-stage Bardenpho configuration with relatively minor modifications, in order to comply with a potential future TN limit of 5 mg/L.

The purpose of membrane filtration at the Hesperia WRP is to remove suspended solids in the mixed liquor from the biological treatment process and to provide a high-quality filtrate to optimize the efficiency of the UV disinfection process. Filtration is a vital component in producing reclaimed water to meet the effluent quality goals set for this project.

PROCESS DESIGN CRITERIA

Biological Treatment Basins

The biological treatment basins are configured as single pass basins, with internal baffles to separate the different anoxic (un-aerated) zones to achieve denitrification, and aerobic (aerated) zones to achieve nitrification, BOD and TSS removal. The baffles provide a physical separation between the different treatment zones within the basins, and are designed to promote serpentine flow and minimize potential short-circuiting and back-mixing between adjacent zones.

Screened wastewater and return activated sludge (RAS) from the MBR basins will be combined in a splitter structure (channel), and equally distributed between the biological treatment basins. Upward opening gates located at the bottom of the splitter channel will feed each biological treatment basin, and will also provide the ability to isolate basins for maintenance. Mixed liquor will flow through a first anoxic zone, a “swing zone”, two aerobic zones, and then a final “swing” zone. A “swing” zone is defined as a zone that can be operated either under aerated or un-aerated (mixed) conditions because it is equipped with both mixers and aeration diffusers. Provisions will be made to install an internal mixed liquor recycle pump in the second aerated zone, with a pipe running inside the basin and discharging into the first anoxic zone.

Mixed liquor will then flow over a weir and into the feed-forward pump wet well. Submersible pumps will transfer the mixed liquor from the wet well to the MBR basins. The feed-forward wet well can also provide equalization volume to compensate for differences between the plant influent flow and the effluent (permeate) flow from the membrane system. The biological process basins are designed with 2 feet of additional freeboard that can provide equalization volume to store peak flows. RAS flow will be returned by gravity from the MBR basins to the splitter channel at the head of the biological process basins.

Biological Treatment Basins Redundancy and Design Criteria

The redundancy of each unit process is defined herein as the treatment capacity as a percentage of the design flow, when operating with a basin out-of-service and while maintaining the effluent quality goals. For end-of-line plants, it is common practice to design fully redundant systems, i.e., provide standby basins for the different unit processes. However, for plants that have the ability to bypass influent flow (i.e., scalping plants) such as the Hesperia WRP, the level of redundancy required is less critical.

Table 6A.1 presents alternatives with different levels of redundancy for the biological treatment basins. The required biological treatment basins total volume is governed by the maximum month loadings presented in DIM No. 1A. Maximum month loading conditions result from increases in wastewater constituent concentrations, and not from an increase in hydraulic flow. The maximum month load peaking factors for BOD, TSS, and TKN are 1.5, 1.5, and 1.3, respectively.

Because the total required volume for biological treatment is determined by the maximum month loading conditions, the alternatives presented in Table 6A.1 require the same total basin volume at the end of Phase 2 (2.0 mgd), and at buildout (4.0 mgd). The number of basins for each alternative results in a different level of redundancy, expressed as a percentage of the design flow at annual average loadings when operating with one basin out-of-service.

Alternative C is recommended for the Hesperia WRP, Phase 1 and Phase 2. Alternative A does not provide any redundancy in Phase 1, and any maintenance performed in the biological treatment basins would result in a diversion of the entire plant flow to the interceptor system. Alternative B results in 4 basins for Phase 2 and a level of redundancy that exceeds standard practice of 100 percent redundancy at annual average day loadings. Alternative C is recommended because it provides 100 percent redundancy with one basin out-of-service under annual average day loading for both phases (1 and 2). The need for biological treatment basin volume and basin redundancy should be re-evaluated after Phase 2.

Table 6A.1 Biological Treatment Basins Redundancy Alternatives
Hesperia WRP Design Information Memoranda
Victor Valley Wastewater Reclamation Authority, California

Phase	Alternative	Redundancy, %[1]	Number of Trains	Annual Average Day Flow Capacity, mgd			Maximum Month Average Day Flow Capacity, mgd
				Each Train	One Train Out of Service (n-1)	All Trains in Service (n)	All Trains in Service (n)
1 (1.0 mgd)	A	0	1	1.5	0.0	1.5	1.0
	B	75	2	0.75	0.75	1.5	1.0
	C	**100**	**2**	**1.0**	**1.0**	**2.0**	**1.3**
2 (2.0 mgd)	A	50	2	1.5	1.5	3.0	2.0
	B	125	4	0.75	2.25	3.0	2.0
	C	**100**	**3**	**1.0**	**2.0**	**3.0**	**2.0**
Buildout (4.0 mgd)	A	112	4	1.5	4.5	6.0	4.0
	B	131	8	0.75	5.25	6.0	4.0
	C	**125**	**6**	**1.0**	**5.0**	**6.0**	**4.0**

Notes:
(1) Expressed as a percentage ratio between the capacity with one basin out-of-service and the annual average design flow and load for each phase.

Table 6A.2 presents a summary of the design criteria for the biological treatment basins, which was established through a process modeling evaluation for the proposed design (DIM No. 3A).

Table 6A.2 Biological Treatment Basins Design Criteria
Hesperia WRP Design Information Memoranda
Victor Valley Wastewater Reclamation Authority, California

Parameter	Unit	Phase 1 (1.0 mgd)	Phase 2 (2.0 mgd)
Type of Basins	-	Single Pass, multiple zones	
Number of Parallel Trains	-	2	3
Basin Volume, each	MG	0.381	
Total Basin Volume	MG	0.763	1.144
Side Water Depth	ft	17 to 19 (1)	
Basin Width (2)	ft	20	
Zone Lengths (2)			
Zone A – Anoxic	ft	10	
Zone B – Swing (Aerobic / Anoxic)	ft	10	
Zone C – Aerobic	ft	55	
Zone D – Aerobic	ft	55	
Zone E – Swing (Aerobic / Anoxic)	ft	20	
Total Basin Length	ft	150	
Feed-Forward Pump Wet Well Width (2)	mgd	20	
Feed-Forward Pump Wet Well Length (2)	mgd	40	60

Notes:

(1) Normal side water depth is 17 ft, with the ability to operate up to 19 ft during periods of flow equalization.

(2) Inside dimensions.

Anoxic Zone Mixing

Submersible propeller mixers are recommended to provide anoxic zone mixing. Submersible propeller mixers are a reliable mixing device and are commonly used in many wastewater treatment plants. To maximize mixing performance in the anoxic zone, it is beneficial to position the mixer to produce a well-defined circulation in the tank. This technique slows tank losses and evenly distributes shear forces and velocities throughout the tank. In general, the power input per unit volume of liquid is used as an indication of a mixer's effectiveness. One mixer per zone is recommended for the biological treatment basins of the Hesperia WRP.

Several variations of submersible propeller mixers are available, including the number of impellers (single vs. dual) and type of mount (deck-mounted vs. rail-mounted). Some operators have identified problems with leaking oil gearboxes for deck- or bridge-mounted mixers. One alternative to this problem is the use of submersible, rail-mounted mixers, which are recommended for this project. While they need to be retrieved from the mixed liquor for maintenance (which typically includes semi-annual grease lubrication), rail-mounted mixers are high efficiency and typically have a lower capital cost than deck- or bridge-mounted units.

Aeration System

The overall aeration system will be designed to effectively control the amount of air delivered to the process. The design will also include sufficient monitoring and control points to allow for the proper control of the activated sludge process.

The aeration system includes the aeration blowers that provide the required process air, and the aeration diffusers that distribute the air and transfer the oxygen in the air into the mixed liquor. The oxygen transfer efficiency of the aeration diffusers has a significant impact not only on the required blower capacity (capital costs), but also on the power consumption of the aeration blowers (operational costs). More efficient oxygen transfer translates to reduced blower capacities required, and reduced operational costs due to the reduced power consumption.

Fine bubble diffusers are recommended for the Hesperia WRP aeration system due to their higher oxygen transfer efficiency, as compared to coarse bubble aeration. Membrane disc type fine bubble diffusers are used in many WRP facilities, including the Westside Water Reclamation Plant.

The recommended blower type is positive displacement. The standard GE/Zenon MBR process blowers are also positive displacement. Maintaining commonality between the biological treatment blowers and the MBR blowers facilitates maintenance and training for operations staff. Other types of blowers include high-speed turbo and centrifugal blowers. While high-speed turbo blowers can be more efficient, the capital cost can be considerably higher (approximately 20 percent more per preliminary estimates). Centrifugal blowers are not recommended for this application due to the variable discharge flows under the expected range of discharge pressures, and due to the higher capital cost for the size range required.

Table 6A.3 presents the basic preliminary design criteria for the aeration system.

Table 6A.3 Aeration System Preliminary Design Criteria
Hesperia WRP Design Information Memoranda
Victor Valley Wastewater Reclamation Authority, California

Parameter	Unit	Phase 1 (1.0 mgd)	Phase 2 (2.0 mgd)
Type of Diffusers	-	Fine bubble, membrane discs	
Blower Air Requirement	scfm	3,200	7,200
Number of Blowers (Duty + Standby)	-	2 + 1	4 + 1
Blower Capacity, each	scfm	1,800	
Firm Blower Capacity, total	scfm	3,600	7,200
Estimated Discharge Pressure (1)	psig	9.4	

Notes:

(1) Estimated discharge pressure includes the additional 2 ft of side water depth provided for potential equalization. At 17 ft of SDW, the estimated discharge pressure is 8.5 psig.

Feed-Forward Pumping

The purpose of the feed-forward wet well pumps is to transfer the activated sludge from the biological process basins to the MBR basins for the final solids-liquid separation process via the membrane filtration system. The wet well can provide some equalization volume to handle variations in the influent flows that are beyond the production capacity of the membranes. In addition, the feed-forward pump station allows the accurate control of the flow from the aeration basins to the membrane zones. While other approaches use downward-opening weir gates to control flow into membrane zones, and equalize in the aeration zones, weirs are water level control devices which do not accurately control flow. The feed-forward pump station approach is superior in its ability to control both flow and level in an accurate fashion. The available flow equalization is discussed later in this memorandum. The feed-forward wet well will be located at the end of the biological process basins.

The proposed feed-forward pumps are non-clog, submersible, wet pit centrifugal pumps with variable speed control via variable frequency drives. The pumps will be provided with guide rails for easy retrieval from the wet well.

Table 6A.4 presents the design criteria for the feed-forward wet well. Three feed-forward pumps equipped with VFD drives will be provided at Phase 1 - two duty and one standby pump. At Phase 2, one of the pumps will require replacement with a larger capacity unit, and an additional pump will be required.

Table 6A.4 Feed-Forward Wet Well Design Criteria
Hesperia WRP Design Information Memoranda
Victor Valley Wastewater Reclamation Authority, California

Parameter	Phase 1 (1.0 mgd)	Phase 2 (2.0 mgd)
Solids Content, %	0.8 (range between 0.7 and 1.0)	
Pump Type	Submersible, Centrifugal, Wet Pit	
Pump Motor Control	VFD	
Design Flow, mgd	5.0	10.0
Number of Pumps (Duty + Standby)	2 + 1	3 + 1
Pump Capacity	2 @ 2,350 gpm (3.4 mgd) 1 @ 1,100 gpm (1.6 mgd)	4 @ 2,350 gpm (3.4 mgd)
Firm Capacity, mgd	5.0	10.2
Total Capacity, mgd	8.4	13.5

Figure 6A.1 presents a preliminary plan and section of the biological treatment basins and feed-forward wet well.

Scum Control

Scum control can be a significant issue in MBR operation, and a positive means to waste scum from the surface of the liquid level in the mixed liquor should be provided in MBR plants. Therefore, the feed-forward wet well will be equipped with a downward-opening slide gate to remove floating scum and waste activated sludge (WAS) from the surface of the mixed liquor. In this manner, the scum and WAS can be simultaneously discharged to the WAS holding wet well, from where the submersible WAS pumps can send the wasted sludge and scum back to the interceptor. At buildout, each end of the feed-forward pump station will include downward-opening weir gates that allow the surface wasting of scum and WAS into each WAS pump station.

MBR System

MBRs consist of proprietary membrane filtration systems combined with a biological activated sludge treatment process. Because of the proprietary nature of the membrane system and its implications for design of the overall wastewater treatment process, the VVWRA selected a membrane system manufacturer at the beginning of the design process. The ZeeWeed® MBR system, manufactured by GE Water & Process Technologies, was selected as the membrane supplier for the new Hesperia WRP MBR system.

The ZeeWeed® MBR system consists of membranes that are immersed in open tanks of aerated mixed liquor. The membranes are hollow fibers with fixed pore sizes to prevent suspended solids from passing through. Permeate pumps create a vacuum in the membrane fibers, which drives flow from the outside of the membrane fiber to the inside of the fiber, filtering the flow through the membrane.

The basic component of the ZeeWeed® membranes is a bundle of hollow membrane fibers called a membrane module. Each module consists of approximately 340 square feet of membrane area. Modules are grouped together into membrane cassettes, and multiple cassettes are configured into a membrane train. Each membrane train is equipped with a dedicated permeate pump.

There are two important design criteria determine the membrane area required in the system. One of these criteria is redundancy. Based on standard practice, a fully redundant MBR train is recommended for the Hesperia WRP. Operating with one of the membrane trains out-of-service is known as the “n-1” condition. Designing the MBR system with the ability to reliably maintain water production at the design flow for the “n-1” condition provides a robust treatment process, capable of operating with an entire membrane train out-of-service. Several conditions result in the MBR system frequently operating with a membrane train out-of-service:

- Backpulsing or maintenance cleaning;
- Recovery cleaning; or
- Maintenance or repair.

Another key design criterion for the design of the MBR system is the flux through the membranes. Flux describes the rate of water filtered through the membrane measured in gallons per day per square foot of membrane area (gfd). Design fluxes need to be evaluated when the MBR system it is operating with all trains in service, and with one train out-of-service. A maximum design flux for these two operating conditions was established, so that the membranes are not subjected to excessive vacuum pressure from the permeate pumps. The maximum design fluxes for the Hesperia WRP were selected as 14 gfd when all membrane trains are in service, and 18 gfd when one membrane train is out-of-service.

MBR System Redundancy and Design Criteria

Table 6A.5 presents alternatives with different levels of redundancy for the membrane filtration trains. The capacity of a given configuration of membrane trains, cassettes, and modules is determined by the net permeate flux through the membranes. The alternatives presented are based on producing the Phase 1 and Phase 2 design flows with all MBR trains in service. The number of MBR trains for each alternative results in a different level of redundancy, expressed as a percentage of the design average day flow.

Alternative D is recommended for Phase 1 and Phase 2 of the Hesperia WRP. Alternative F does not provide any redundancy in Phase 1, and any maintenance performed in the MBR trains would result in a diversion of the entire plant flow to the interceptor system. Alternative E results in a level of redundancy that would exceed standard practice for a scalping plant. Alternative D is recommended because it provides 50 percent redundancy with one MBR train out-of-service under Phase 1 and Phase 2 flows, yet it provides the flexibility to re-evaluate redundancy needs after Phase 2, as expansions to either Alternative D or Alternative E are feasible for Phase 2. The recommended alternative requires that during periods when an MBR train is out-of-service, only 50 percent of the design influent flow can be pumped to the treatment system.

Table 6A.5 MBR Basins Redundancy Alternatives
Hesperia WRP Design Information Memoranda
Victor Valley Wastewater Reclamation Authority, California

Phase	Alternative	Redundancy, % (1)	Number of Trains / Modules / Cassettes	Average Day Flow Capacity, mgd	
				One Train Out of Service (n-1)	All Trains in Service (n)
1 (1.0 mgd)	**D**	**50**	**2 / 3 / 42**	**0.5**	**1.0**
	E	100	3 / 2 / 42	1.0	1.0
	F	0	1 / 5 / 42	0.0	1.0
2 (2.0 mgd)	**D**	**50**	**2 / 5 / 42**	**1.0**	**2.0**
	E	100	3 / 4 / 42	2.0	2.0
	F	n/a	n/a	n/a	n/a
Buildout (4.0 mgd)	D	88	4 / 5 / 42	3.5	4.0
	E	100	5 / 4 / 42	4.0	4.0
	F	n/a	n/a	n/a	n/a

Notes:
(1) Expressed as a percentage ratio between the capacity with one basin out-of-service and the annual average design flow and load for each phase.

The recommended design criteria for the MBR system is presented in Table 6A.6. Membrane fluxes will be maintained below the established maximum design criteria for the “n” and “n-1” conditions by constructing two membrane trains. For the initial Phase 1 construction, each membrane train will be equipped with three membrane cassettes. To expand to the Phase 2 treatment capacity and maintain the same level of redundancy, two additional membrane cassettes will be added to each membrane train. Another alternative at Phase 2, if more redundancy is required, is to construct a third membrane train and install four cassettes per

train. Both options are feasible by constructing the Phase 1 membrane trains with space for 5 cassettes per train. Alternatively, additional redundancy is provided for moving membranes from an out-of-service membrane train, by using the bridge crane, and installing into the operating train. Since the buildout operation is not known at this time, a recommendation on buildout redundancy is not provided.

Table 6A.6 Membrane Filtration Design Criteria
Hesperia WRP Design Information Memoranda
Victor Valley Wastewater Reclamation Authority, California

Parameter	Phase 1	Phase 2
Number of membrane trains	2	2
Number of membrane cassettes per train	3	5
Number of cassette spaces per train	5	5
Number of membrane modules per cassette (1)	42	42
Total membrane area, “n” condition, ft^2	85,680	142,800
Total membrane area, “n-1” condition, ft^2	42,840	71,400
Design membrane flux, “n” condition, gfd	11.7	14.0
Design Flow, “n” condition, mgd	1.0	2.0
Design Flow, “n-1” condition, mgd	0.5	1.0

Notes:
(1) Maximum number of modules per cassette is 48.

The proposed membrane basins layout is illustrated in Figure 6A.2. In addition, ancillary equipment associated with the MBR process includes blowers, air compressors, and chemical feed systems. The MBR process blowers distribute air into the MBR basins to provide air scouring of the membrane fibers, and assist with the treatment process. Air compressors provide air to operate pneumatic valves associated with the MBR process. The chemical feed systems associated with the MBR process include bulk (12.5 percent) sodium hypochlorite and citric acid to assist with cleaning the membrane fibers. A back pulse tank is also provided to serve as the water source for membrane back pulsing and cleaning operations. The ancillary equipment associated with the MBR process is located in areas adjacent to the MBR basins.

Flow Equalization

Flow equalization is required when the influent flow to the WRP exceeds the membrane production capacity (plant effluent). Because the Hesperia WRP is being designed as a scalping plant, it is not expected that significant hydraulic peaks need to be dealt with at the plant. However, Carollo recommends adding flexibility to the design, in order to include some degree of flow equalization to equalize minor fluctuations in the flow, and also in case future design conditions change and the plant needs to operate as an “end-of-the-line” plant.

The proposed secondary system provides two locations for flow equalization. One of these locations is the feed-forward wet well, which can provide equalization volume that depends on the operating side water depth of the wet well. As a conservative approach, the side water depth of the feed-forward wet well is designed 2 feet below the side water depth in the biological treatment basins. Once this volume is used up, the water level rises, submerging the final weir of the biological treatment basins, making the water level in the feed-forward wet well and the

water level in the biological treatment basins equal. Should equalization requirements increase in the future, the level in the wet well can be operated lower in order to increase the available equalization volume.

The biological process basins are designed with a total freeboard of 3 feet. Leaving a freeboard of approximately 1 feet at all times, the remaining 2 feet above the normal operating level can be used for equalization of peak flows.

To determine the system capability to equalize flows, a maximum water production from the MBR system needs to be determined. For the purposes of calculating equalization capabilities, the maximum allowable flux through the membranes was established at 20 gfd.

Table 6A.7 presents the design criteria as it relates to flow equalization within the proposed system. The most critical conditions for equalization occur when one biological process basin is out-of-service. The analysis presented herein does not consider MBR trains out-of-service (under such conditions, the plant flow is limited to 50 percent of the plant capacity). Under these conditions, the maximum peak flow (with a duration of 4 hours) that the system can equalize is 2.0 mgd (Phase 1) and 3.3 mgd (Phase 2) or a peaking factor of 2 and 1.65, respectively, with one aeration basin out-of-service.

Table 6A.7 Flow Equalization Analysis
Hesperia WRP Design Information Memoranda
Victor Valley Wastewater Reclamation Authority, California

Parameter	Unit	Phase 1	Phase 2
Influent Average Flow	mgd	1.0	2.0
Maximum Influent Peak Flow (1)	mgd	2.0	3.3
Maximum Flux through MBR System	gfd	20.0	
Number of MBR Basins in Service	-	2	
MBR System Capacity (n-1)	mgd	1.71	2.86
Equalization Flow	mgd	0.29	0.44
Peak Flow Duration	hr	4.0	4.0
Equalization Volume (1)	gal	47,733	74,000
Number of Biological Treatment Basins in Service	-	1	2
Side Water Depth Used for Equalization (1)	ft	1.9	1.8
Total Available Freeboard	ft	3.0	3.0
Freeboard Below Top of Basin During Equalization	ft	1.1	1.2

Notes:

(1) Calculations assume that 2 feet of side water depth in the feed-forward wet well is available for flow equalization.

Equalization is required to compensate flows smaller than the target design capacity of 1.0 mgd. The proposed biological treatment basins and feed-forward pump station provide sufficient available volume to equalize influent flows and consistently produce 1.0 mgd of treated effluent Figure 6A.3 presents an analysis of the equalization volume used assuming an average day flow (ADF) of 2.3 mgd available in the interceptor. As presented in DIM No. 1A, the ADF of 2.3 mgd and the diurnal flow profile were obtained from the predicted flow according to the Wastewater Master Plan (Carollo Engineers, 2008). The required equalization volume can be obtained from the feed forward wet well, as shown in the level fluctuations presented in Figure 6A.4. The calculations assume that one aeration basin and one section of the feed-forward wet well are in service.

Because of the uncertainty of the actual ADF available in the interceptor at plant startup, an additional scenario with an ADF of 1.0 mgd was considered in the equalization volume analysis. This is the most critical scenario for the purposes of evaluating equalization volume requirements. Figure 6A.5 presents an analysis of the equalization volume used assuming an average day flow (ADF) of 1.0 mgd available in the interceptor. For this scenario, both biological treatment basins and both sections of the feed-forward wet well need to be in service in order to provide sufficient equalization volume to consistently produce 1.0 mgd of treated effluent. Figure 6A.6 presents the estimated level fluctuations in the biological treatment basins and the feed-forward wet well for this scenario.

SUMMARY AND RECOMMENDATIONS

- Two biological treatment basins are recommended for Phase 1. One additional basin is recommended for Phase 2. Basins are sized to reliably treat the design flow under average constituent loadings with one basin out-of-service, and to treat maximum month loadings with all units in service. The maximum month load peaking factors for BOD, TSS, and TKN are 1.5, 1.5, and 1.3, respectively.
- Each basin contains anoxic and aerobic zones separated by baffles that promote serpentine flow. The last zone of each basin is designed as a “swing” zone with the ability to operate under anoxic or aerobic conditions. We recommend making provisions to readily install an internal mixed liquor return pump in Zone D of each basin, which will discharge into Zone A.
- A feed-forward configuration is recommended for the biological process / MBR system to improve process control and equalization. Mixed liquor will be pumped from the feed-forward wet well to the MBR basins. RAS flow back to the biological treatment basins is achieved via gravity. The recommended feed-forward pumping system is based on wet pit submersible pumps with variable speed control.
- The recommended MBR system configuration is based on two trains for Phases 1. At Phase 2, the water production capacity of the MBR system is increased by adding either two more cassettes in each MBR train (2 trains, 5 cassettes per train), or by adding one more train with one more cassette per train (3 trains, 4 cassettes per train). Membrane trains will be designed to hold 5 cassettes to allow either expansion option at Phase 2.
- Propeller-type submersible mixers are recommended for anoxic mixing.
- Fine bubble membrane disc aeration diffusers are recommended due to the higher transfer efficiency compared to coarse bubble diffuser systems. Positive displacement blowers are recommended for the aeration system, based on commonality with MBR blowers and lower capital cost.
- A downward-opening gate is recommended as part of the sludge wasting system, in order to achieve a positive mean to eliminate scum from the surface.

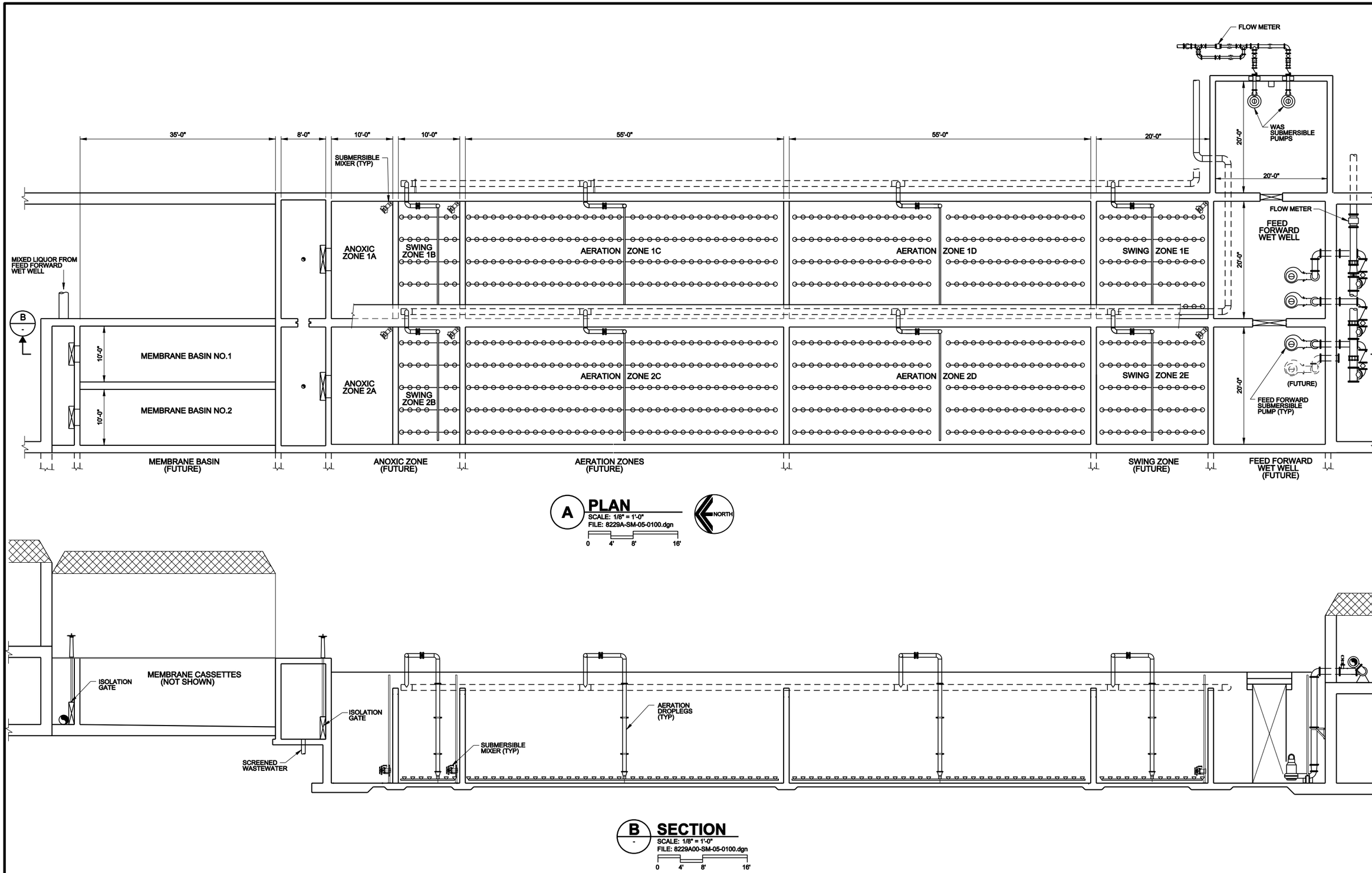

VICTOR VALLEY WASTEWATER RECLAMATION AUTHORITY
HESPERIA WRP - PRELIMINARY DESIGN REPORT

HDR

carollo

AERATION/MEMBRANE FACILITIES - PLAN & SECTION

FIGURE 6A.1

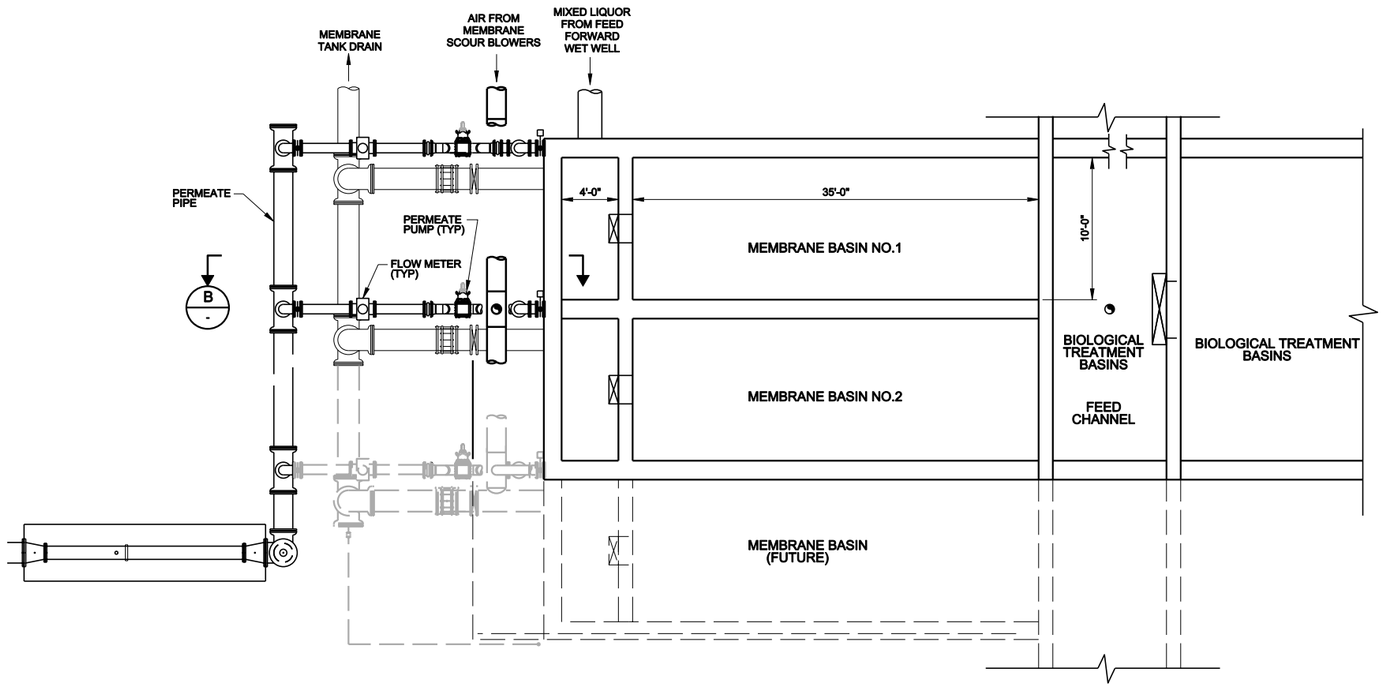

A PLAN
SCALE: 3/16" = 1'-0"
0 2' 4' 6' 12'

NORTH

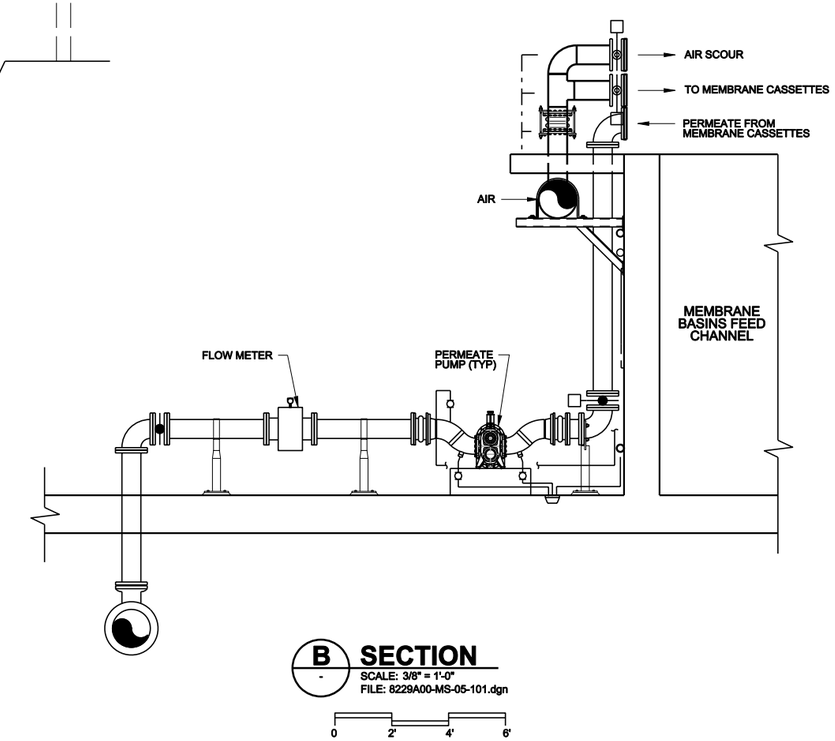

B SECTION
SCALE: 3/8" = 1'-0"
FILE: 8229A00-MS-05-101.dgn
0 2' 4' 6'

VICTOR VALLEY WASTEWATER RECLAMATION AUTHORITY
HESPERIA WRP - PRELIMINARY DESIGN REPORT

HDR

carollo

MBR FACILITIES - PLAN & SECTION

FIGURE 6A.2

V:\V:\Client 20 (OCO)\Reports\8229a00 100\Fig_6a-3.ai

EQUALIZATION VOLUME ANALYSIS,
ADF = 2.3 MGD

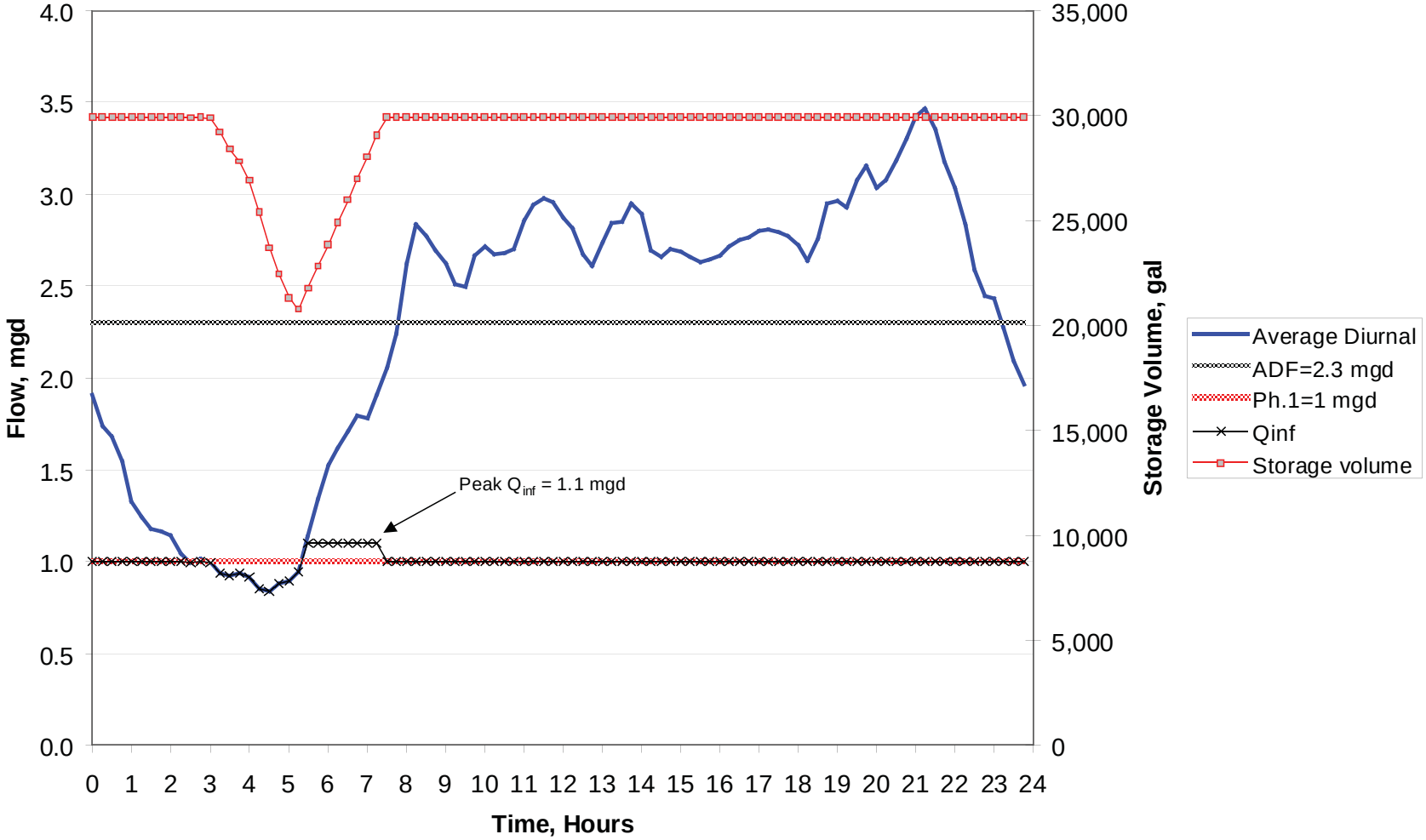

FIG 6A.3

carollo HDR

VICTOR VALLEY WATER RECLAMATION AUTHORITY -
HESPERIA WRP - PRELIMINARY DESIGN REPORT

V:\V:\Client 20 (OCO)\Reports\8229a00 100\Fig_6a-4.ai

BASIN LEVEL FLUCTUATIONS,
ADF = 2.3 MGD

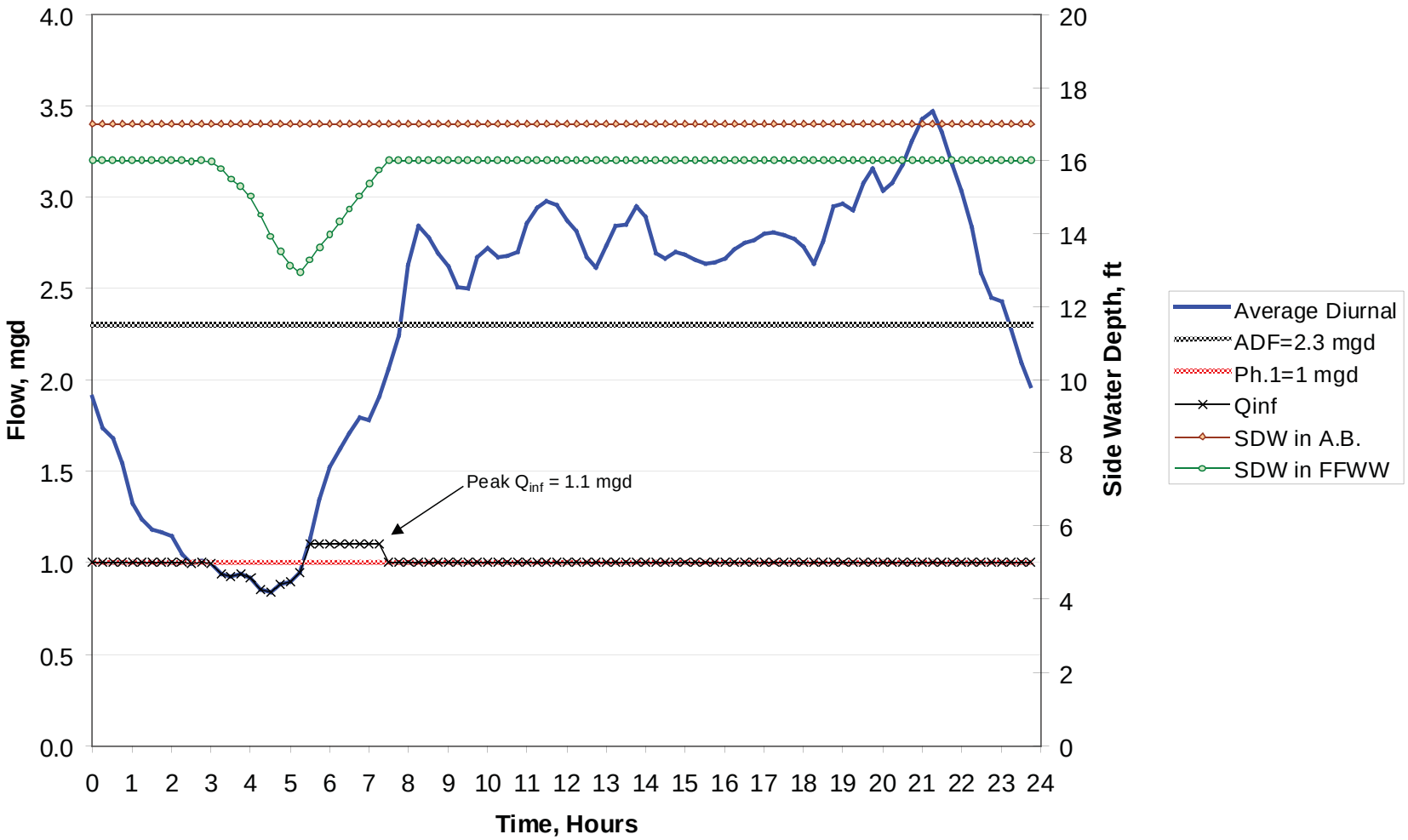

FIG 6A.4

carollo HDR

VICTOR VALLEY WATER RECLAMATION AUTHORITY -
HESPERIA WRP - PRELIMINARY DESIGN REPORT

V:\V:\Client 20 (OCO)\Reports\8229a00 100\Fig_6a-5.ai

EQUALIZATION VOLUME ANALYSIS,
ADF = 1.0 MGD

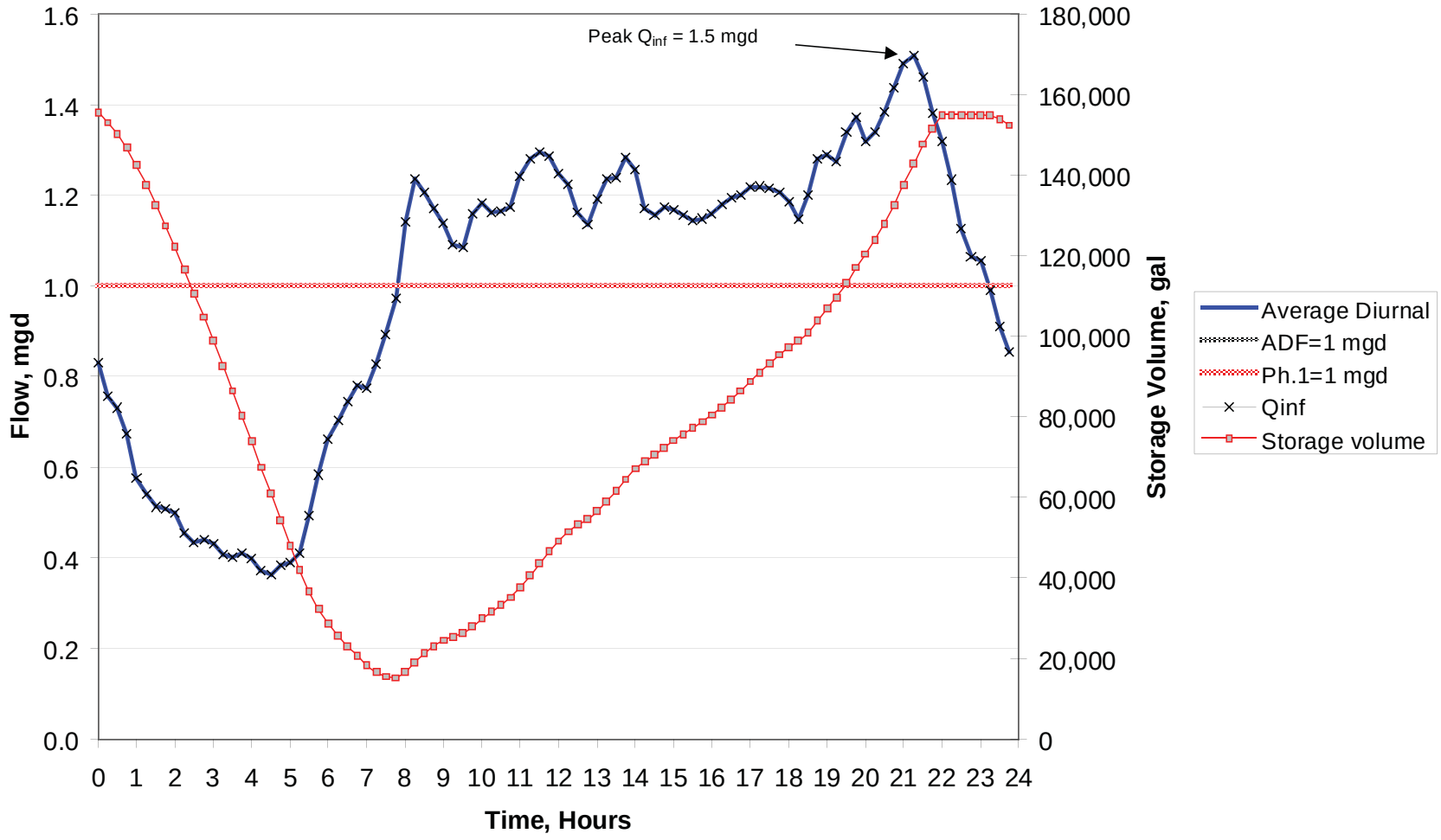

FIG 6A.5

carollo HDR

VICTOR VALLEY WATER RECLAMATION AUTHORITY -
HESPERIA WRP - PRELIMINARY DESIGN REPORT

V:\V:\Client 20 (OCO)\Reports\8229a00 100\Fig_6a-6.ai

BASIN LEVEL FLUCTUATIONS,
ADF = 1.0 MGD

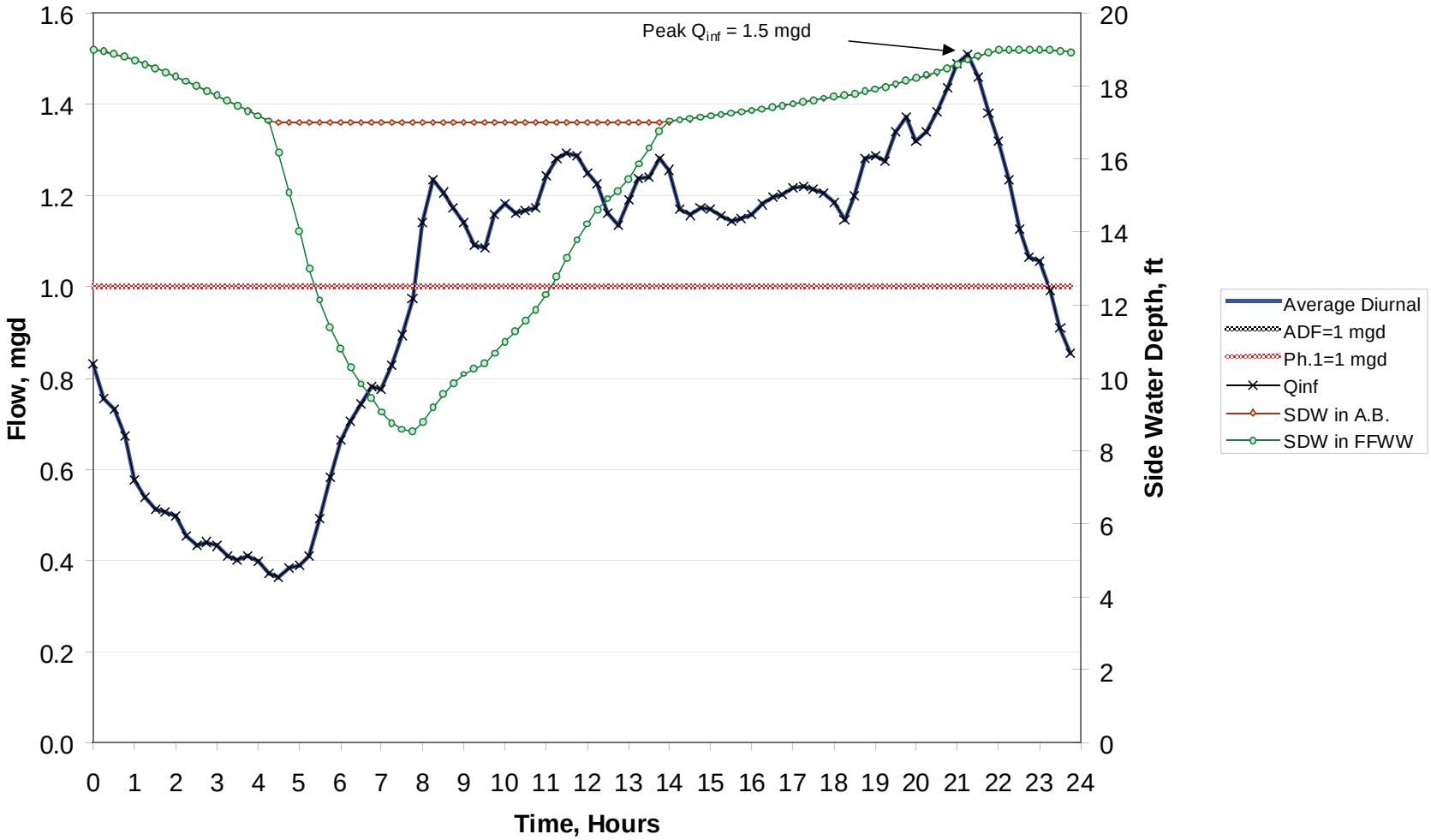

FIG 6A.6

carollo HDR

VICTOR VALLEY WATER RECLAMATION AUTHORITY - HESPERIA WRP - PRELIMINARY DESIGN REPORT

HESPERIA WATER RECLAMATION PLANT

DESIGN INFORMATION MEMORANDUM NO. 7A

DISINFECTION

Project Name:	Hesperia and Apple Valley Scalping WRPs, Raw Sewage Lift Station and Force Mains		
Client:	Victor Valley Wastewater Reclamation Authority	**Date:**	December 2009

INTRODUCTION

The goal of the disinfection process is to significantly reduce or eliminate pathogenic microorganisms prior to discharging the treated effluent (reclaimed water). Multiple unit treatment processes may be used to achieve this requirement. As for the Hesperia WRP, ultraviolet light (UV) disinfection was pre-selected by VVWRA, to be consistent with the Westside Water Reclamation Plant (WRP) disinfection process.

The level of disinfection at Hesperia WRP is dictated by the desired end-use (reuse and recharge) of the reclaimed water. Effluent quality requirements and recommended effluent design criteria are discussed in detail in DIM-1A. The recommended reclaimed water disinfection design criteria is intended to meet the definition of “filtered wastewater” in California’s Water Recycling Criteria, Title 22, Division 4, Chapter 3.

PROCESS EQUIPMENT

UV disinfection uses UV light rays to inactivate pathogens in water. UV systems can be provided in open channel or closed-vessel configurations. Open channel UV systems flow by gravity through an open channel, which is often covered to discourage algal growth. Closed-vessel UV systems are pressurized vessels in which water must be pumped through the unit. At the Hesperia WRP, a closed-vessel UV system would take advantage of the permeate pumps associated with the MBR system (to pump the water through the UV vessels) and would provide a more compact system orientation.

UV light can be produced by UV lamps of low-pressure (LP), medium-pressure (MP) or low-pressure/high-output (LP/HO). Low-pressure UV systems require a large number of low-wattage lamps. Medium pressure UV systems use high-wattage lamps and therefore require fewer lamps than low-pressure systems to achieve similar disinfection. Low pressure/high output UV systems require an intermediate number of lamps (i.e. between their low and medium pressure counterparts) and also have an intermediate UV output. Based on considerations of competitive bid, both LP/HO and MP UV system are suitable for installation at the Hesperia WRP.

Based on preliminary discussions with Southern California Edison, they recommended using lower power equipment when practical; which will likely result in a final design recommendation to select LP/HO high output over MP UV reactors.

Using UV light for disinfection does not cause any disinfection byproduct (DBP) formation, requires no in-stream chemicals for primary disinfection, and eliminates on-site dechlorination requirements. UV disinfection also has the benefits of compact footprint, ease of upgradeability, future use in treating emerging contaminants, compatibility with MBR technology, and short treatment (i.e. exposure or contact time).

On the other hand, UV process has a relatively high electrical power consumption and can be used to achieve only primary disinfection. A secondary disinfection is typically required to maintain a disinfectant residual in reclaimed water storage and distribution systems.

PROCESS LAYOUT

Based on the recommended equipment, a preliminary closed-vessel UV disinfection configuration is presented in Figure 7A.1. The UV disinfection system at Hesperia WRP will be installed in the lower level of the facility building at the north end of MBR basins.

SUMMARY AND RECOMMENDATIONS

In summary, the recommended disinfection system for the Hesperia WRP include:

- The use of closed-vessel UV reactor.
- Low-pressure/high-output (LP/HO) or medium pressure (MP) UV lamps.
- NWRI (2003) requires designed UV dose of at least 80 mJ/cm^2 for water reuse disinfection downstream of membrane filtration. Based on Carollo's experience with UV validation testing, a UV design dose of 88 mJ/cm^2 is recommended to ensure the actual delivered UV dose in reclaimed water no lower than 80 mJ/cm^2.
- While UV light will be used to achieve primary disinfection of the WRP effluent, bulk sodium hypochlorite will be used for secondary disinfection to provide chlorine residual in the reclaimed water storage and distribution systems.

The recommended UV disinfection design criteria are listed in Table 7A.1 for the three UV manufacturers we evaluated.

Table 7A.1 UV Disinfection System Recommended Design Criteria
Hesperia WRP Design Information Memoranda
Victor Valley Wastewater Reclamation Authority, California

Parameters	Phase 1 (1 mgd)	Phase 2 (2 mgd)
Design Maximum Flow, mgd	1.0	2.0
Maximum Total Suspended Solids, mg/L	5	
Type of UV Reactor	Closed-vessel	
Type of UV Lamp		
Wedeco LBX1000	Low-pressure/high-output	
Trojan UVFit - 32AL50	Low-pressure/high-output	
Aquionics Inline 4500+	Medium pressure	
Minimum UV Transmittance, %	65	
Design Dose, mJ/cm^2	88	
Number of UV Units		
Wedeco LBX1000	2 duty + 1 standby	3 duty + 1 standby
Trojan UVFit - 32AL50	2 duty + 1 standby	4 duty + 1 standby
Aquionics Inline 4500+	4 duty + 2 standby	8 duty + 2 standby
Type of Cleaning	Automatic chemical/mechanical	
End of Lamp Life		
Wedeco LBX1000	0.88	
Trojan UVFit - 32AL50	0.90	
Aquionics Inline 4500+	0.80	
Lamp Fouling Factor		
Wedeco LBX1000	0.90	
Trojan UVFit - 32AL50	0.80	
Aquionics Inline 4500+	0.90	

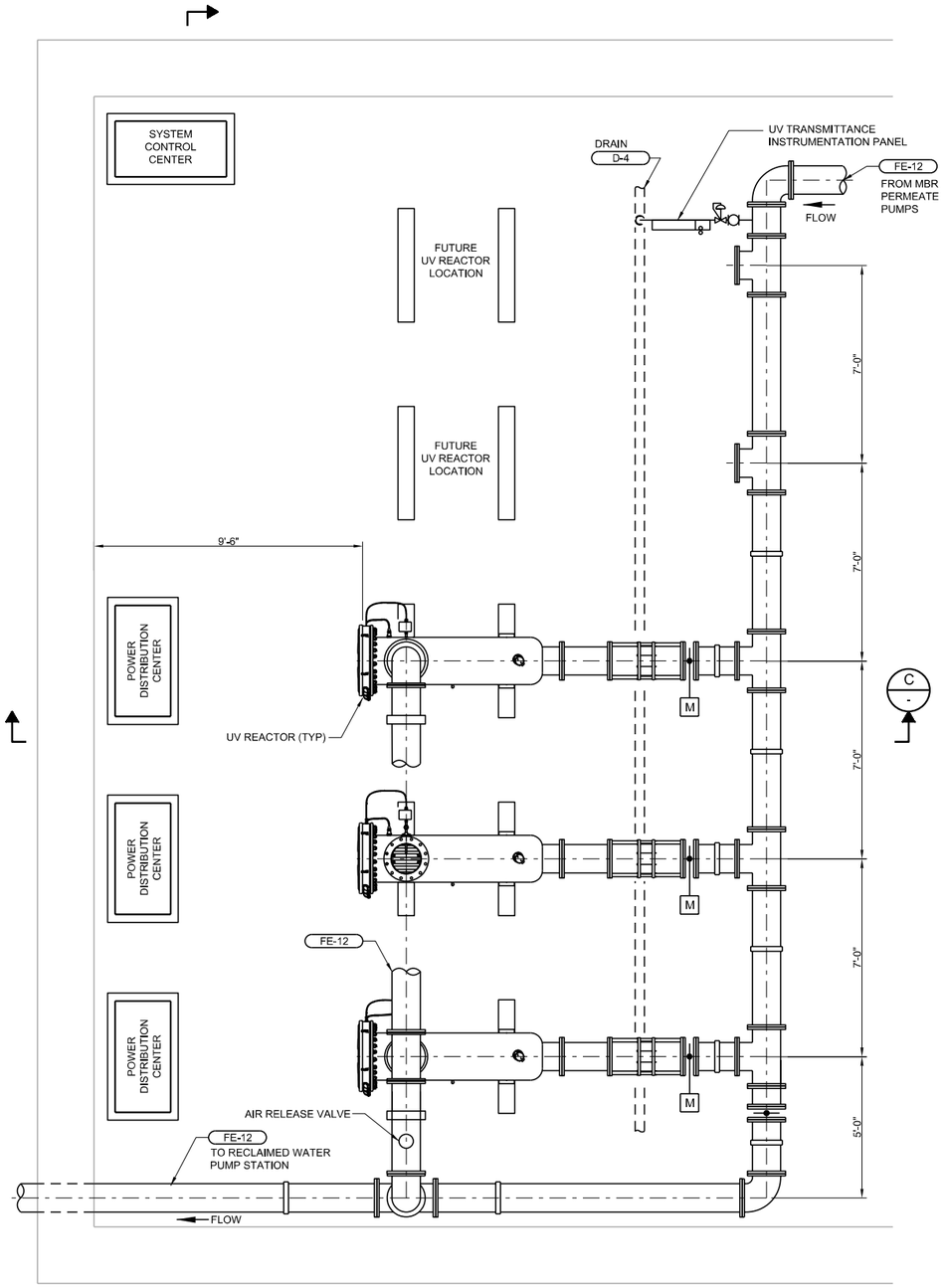

A PLAN
SCALE: 3/8" = 1'-0"
FILE: 7528B10-M-07-100
0 2' 4' 6'

NORTH

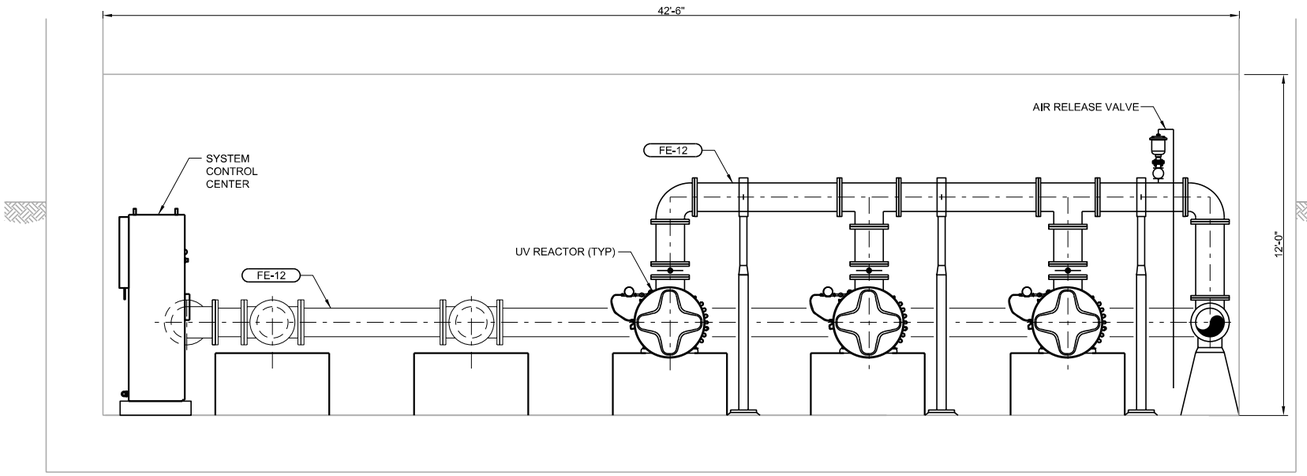

B SECTION
SCALE: 3/8" = 1'-0"
FILE: -
0 2' 4' 6'

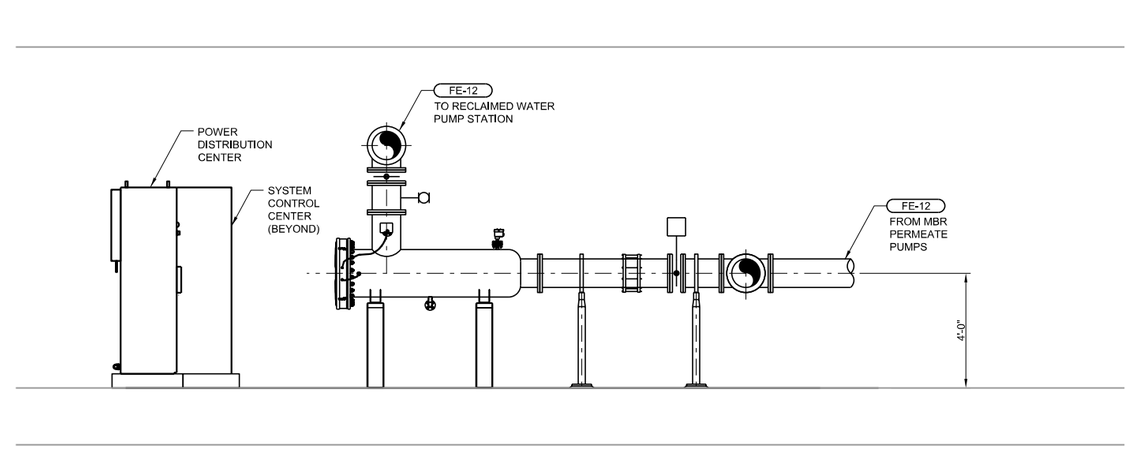

C SECTION
SCALE: 3/8" = 1'-0"
FILE: -
0 2' 4' 6'

VICTOR VALLEY WASTEWATER RECLAMATION AUTHORITY
HESPERIA WRP - PRELIMINARY DESIGN REPORT

HDR

carollo

UV DISINFECTION SYSTEM - PLAN & SECTIONS

FIGURE 7A.1

HESPERIA WATER RECLAMATION PLANT

DESIGN INFORMATION MEMORANDUM NO. 8A

RECLAIMED WATER PUMP STATION

Project Name:	Hesperia and Apple Valley Scalping WRPs, Raw Sewage Lift Station and Force Mains		
Client:	Victor Valley Wastewater Reclamation Authority	**Date:**	December 2009

INTRODUCTION

A reclaimed water pump station will be provided to convey the reclaimed water for off-site uses and on-site reclaimed water uses. The pump station will be situated after the UV disinfection system. The purpose of this DIM-8A is to summarize the proposed reclaimed water pump station requirements for the Hesperia WRP.

PROCESS EQUIPMENT

The reclaimed water pump station will be comprised of a concrete clear well with vertical turbine pumps supplied with VFDs to provide pumping flexibility. Surge relief valves will be included on the reclaimed water force main that supplies off-site uses. The on-site plant water system will include a hydropneumatic tank to maintain pressure in the system. Chlorine feed will be provided to the clear well to provide for residual chlorination of the reclaimed water.

Phase 1 will include two vertical turbine pumps capable of pumping 1.0 mgd each, thereby providing a 1+1 configuration. Phase 2 will include a third 1.0 mgd pump to provide a 2+1 configuration. Phase 3 expansion will need to add two additional 1.0 mgd pumps to provide a 4+1 configuration. The plant water supply will be fed by two vertical turbine pumps in a 1+1 configuration.

The sizing of the effluent pumps, horsepower and total dynamic head requirements, are contingent upon the final selection of reuse sites by the City of Hesperia.

A back pulse tank will be provided as part of the membrane system requirements. This tank will hold reclaimed water for use in back pulsing the membranes.

The preliminary layout and sections of the reclaimed water pump station are shown in Figure 8A.1.

CONTROL DESCRIPTION

The pump station will be operated based upon the water level in the clear well. Since the WRP is typically run with a constant influent feed (Phase 1 at 1 mgd), the pump station will also typically pump a consistent flow of approximately 1 mgd (minus plant water uses, evaporative loses, WAS discharge, etc.).

Plant water uses will be augmented by potable water for periods when the WRP production is not sufficient to meet the in plant water uses.

An ultrasonic water level sensor, high water level float, reclaimed water flowmeter, and potable water flowmeter will be provided at the pump station.

The recommended reclaimed water pump station design criteria are listed in Table 8A.1.

Table 8A.1 Reclaimed Water Pump Station Recommended Design Criteria Hesperia WRP Design Information Memoranda Victor Valley Wastewater Reclamation Authority, California

Parameters	Phase 1 (1 mgd)	Phase 2 (2 mgd)	Phase 3 (4 mgd)
Type of Reclaimed Water Wet Well	Concrete clear well		
Type of Reclaimed Water Pump	Vertical turbine		
Pump Capacity, mgd, each	1.0		
Number of Reuse Water Pumps	1 duty + 1 standby	2 duty + 1 standby	4 duty + 1 standby
Number of Plant Water Pumps	1 duty + 1 standby		

SUMMARY AND RECOMMENDATIONS

In summary, the recommended reclaimed water pump station for the Hesperia WRP includes:

- Concrete clear well pump station.
- The use of vertical turbine pump for off-site reuse and on-site plant water system.
- Hydropneumatic tank to maintain plant water system pressure.
- Back pulse tank to store reclaimed water for membrane back pulsing.
- Chlorine feed to the clear well to provide residual chlorination of the reclaimed water.

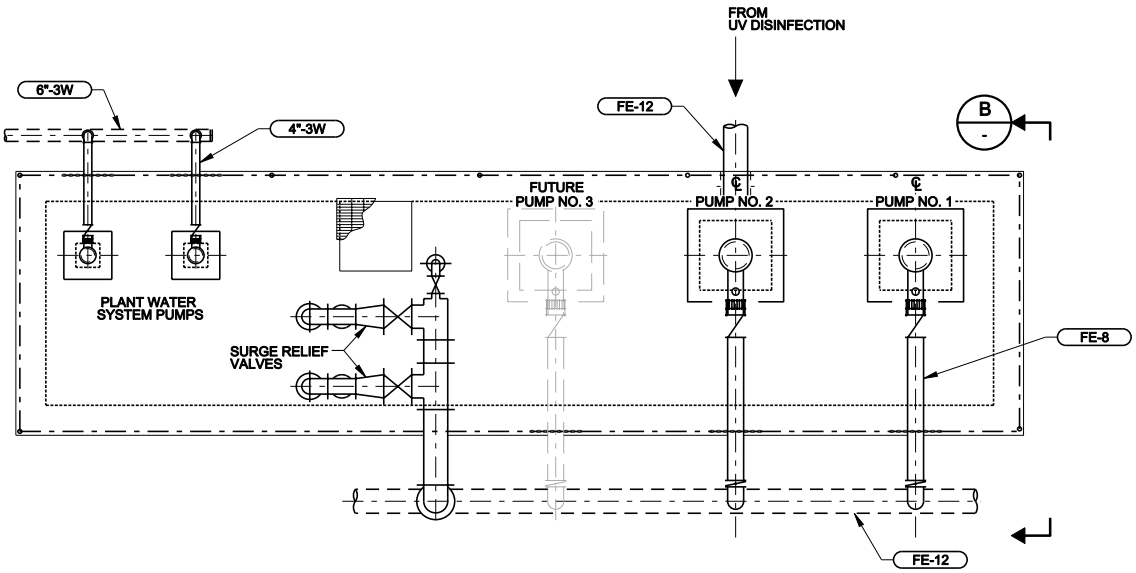

A PLAN
SCALE: 1/4" = 1'-0"
FILE: -

0 2' 4' 8'

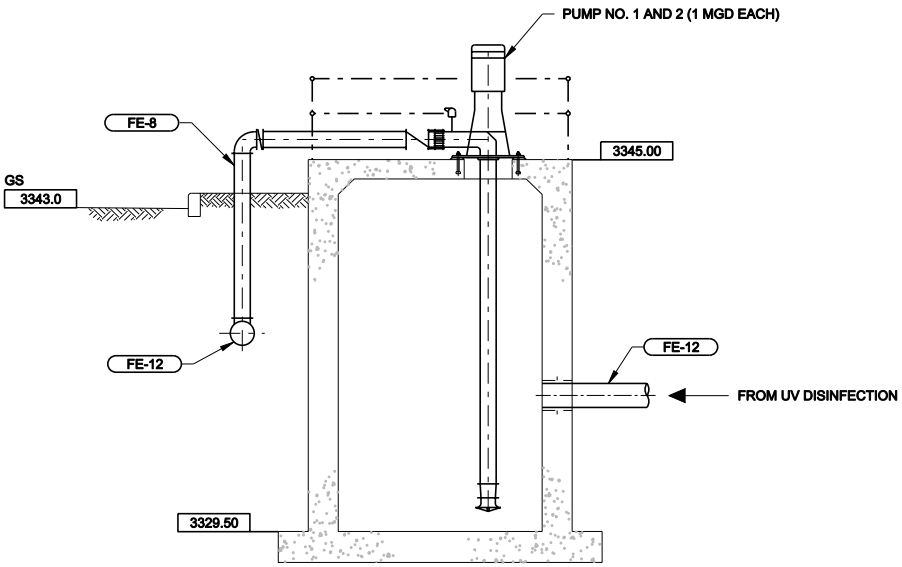

B - SECTION
SCALE: 1/4" = 1'-0"
FILE: -

0 2' 4' 8'

VICTOR VALLEY WASTEWATER RECLAMATION AUTHORITY
HESPERIA WRP - PRELIMINARY DESIGN REPORT

HDR

carollo

RECLAIMED WATER PUMP STATION - PLAN & SECTION

FIG 8A.1

HESPERIA WATER RECLAMATION PLANT

DESIGN INFORMATION MEMORANDUM NO. 9A

RESIDUALS HANDLING AND DISPOSAL

Project Name:	Hesperia and Apple Valley Scalping WRPs, Raw Sewage Lift Station and Force Mains		
Client:	Victor Valley Wastewater Reclamation Authority	**Date:**	December 2009

INTRODUCTION

The Hesperia WRP will be designed to treat incoming wastewater, but it will not include facilities for treatment of the residuals solids generated at the WRP. Waste activated sludge will be generated at the WRP as part of the biological wastewater treatment process. The solids stream generated at the Hesperia WRP will be sent to the Westside WRP for further treatment. The purpose of this DIM No. 9A is to summarize the residuals handling and disposal requirements for the Hesperia WRP.

PROCESS DESCRIPTION

Waste activated sludge (WAS) needs to be removed from the secondary process on a regular basis in order to maintain a target mixed liquor suspended solids (MLSS) concentration and a target solids retention time (SRT) in the biological treatment system. There are two optional locations from which WAS can be removed from the secondary treatment system. One option is to waste solids from the biological treatment basins, and a second option is to waste solids from the membrane basins.

The proposed location for solids wasting is at the feed-forward pump station located at the end of the biological treatment basins, upstream of the membrane basins. The main advantage of this location is that WAS and scum wasting can be achieved simultaneously. Removing scum that accumulates at the mixed liquor water surface is an important issue in the operation of MBR systems, where a surface wasting mechanism needs to be provided to selectively remove scum.

Wasted solids will be discharged to the interceptor for treatment at the Westside WRP. The WAS discharge point in the interceptor will be downstream of the intake to the influent pump station to avoid solids recycling and accumulation in the treatment process.

PROCESS EQUIPMENT

The feed-forward wet well will be equipped with a downward-opening slide gate to remove floating scum and waste activated sludge (WAS) from the surface of the mixed liquor. In this manner, the scum and WAS will be simultaneously discharged to a WAS holding wet well.

Non-clog submersible centrifugal pumps will send the wasted sludge and scum from the holding wet well to the interceptor. The WAS and scum flow will be metered using a magnetic flowmeter.

The WAS pump station will be operated based upon the water level in the wet well. The pumps will be constant speed pumps. Periodically, the pumps will be run down (operator local control) to clean out the wet well. A hose bib will be provided near the wet well to allow operators to wash

down any scum accumulation in the wet well. An ultrasonic water level sensor, low and high water level floats, and a WAS/Scum flowmeter will be provided at the pump station.

Table 9A.1 summarizes the design criteria for the WAS and scum wasting system.

Table 9A.1 WAS and Scum Wasting Design Criteria
Hesperia WRP Design Information Memoranda
Victor Valley Wastewater Reclamation Authority, California

Parameter	Phase 1 (1.0 mgd)	Phase 2 (2.0 mgd)	Buildout (4.0 mgd)
Daily Solids at Max. Month Loading, ppd	4,800	10,200	20,300
Daily Solids at Avg. Day Loading, ppd	2,800	6,100	12,100
Design WAS Solids Concentration, mg/L	8,000		
Daily Flow at Max. Month Loading, gpd	71,940	152,880	304,260
Daily Flow at Avg. Day Loading, gpd	41,970	91,430	181,350
WAS/Scum Pump Design Flow, gpm	450	450	450
Pump Operating Schedule			
Days per week	5	5	5
Hours per day at Max. Month Loading	3.7	7.9	7.9
Hours per day at Avg. Day Loading	2.2	4.7	4.7
Pump Type	Non-clog Centrifugal Submersible, Wet Pit		
Pump Motor Control	Constant Speed		
Number of Pumps (Duty + Standby)	1 + 1	1 + 1	2 + 1
Firm Capacity, gpm	450	450	900
Total Capacity, gpm	900	900	1,350
WAS Flowmeter Type	Magnetic		

SUMMARY AND RECOMMENDATIONS

WAS will be pumped from the Hesperia WRP into the collection system force main to allow conveyance to the downstream portion of the collection and ultimate treatment at the Westside WRP. The WAS holding wet well will be common-walled with the feed forward pump station to allow for surface wasting of WAS and scum. The wet well will consist of two submersible pumps in a 1+1 configuration for Phases 1 and 2. For buildout, one additional duty pump will be required.

DESIGN INFORMATION MEMORANDUM NO. 10A

SITE AESTHETICS

Project Name:	Hesperia and Apple Valley Scalping WRPs, Raw Sewage Lift Station and Force Mains		
Client:	Victor Valley Wastewater Reclamation Authority	**Date:**	December 2009

INTRODUCTION

The Hesperia WRP will be located near existing residential homes and as such will be constructed to reduce aesthetics impacts. This DIM-10A focuses on the site aesthetics for the Hesperia WRP.

ARCHITECTURAL CONCEPT

The selected building façades provide an urban gesture that is respective and friendly to the community. The tones and movements are subtle as the California desert. The split face block incorporates accent block and two tones respective to a native palette. The buildings interact with the horizon with the use of sloped roofs and variation of building heights. The roof incorporates dormers to add natural light into the interior spaces and to break the large span of the roof. Natural and ambient day lighting will be incorporated where possible and practical. The architectural variations are integrated structurally into these facilities to maintain integrity. Preliminary elevations are provided in Figure 10A.1.

Summary of Architectural Concept

- Roof: Standing seam roof
- Façade: CMU split face
- Site fencing: Chain link fence (entrance feature at the plant site)
- Screening: Small berms and landscaping where appropriate
- Codes: Hesperia, California Municipal Code, Title 16 Development Code, Chapter 16.16, Article XII, Industrial Districts

NOISE ABATEMENT

The major equipment that produce noise are pumps and blowers. The process and membrane air scour blowers will be located inside a building with noise attenuation panels. The potential to enclose the blowers in a noise enclosure within the building will be explored to reduce the impact to operational personnel to the noise.

Motors not located within buildings will be further evaluated during the design phase to determine the appropriate speed to reduce noise potential.

LANDSCAPING AND SITE SCREENING

The site will be buffered with a native landscape incorporating the use of small berms and the site fence will be varied with pilasters where appropriate. This perimeter screening will reduce the line of site of the WRP and increase the overall aesthetic acceptability of the project.

SITE SECURITY

The perimeter fence will maintain security along the boundary of the facility. A gate with keycard and fire department access will be included. Other security features, such as cameras and alarms, are discussed in DIM 12A.

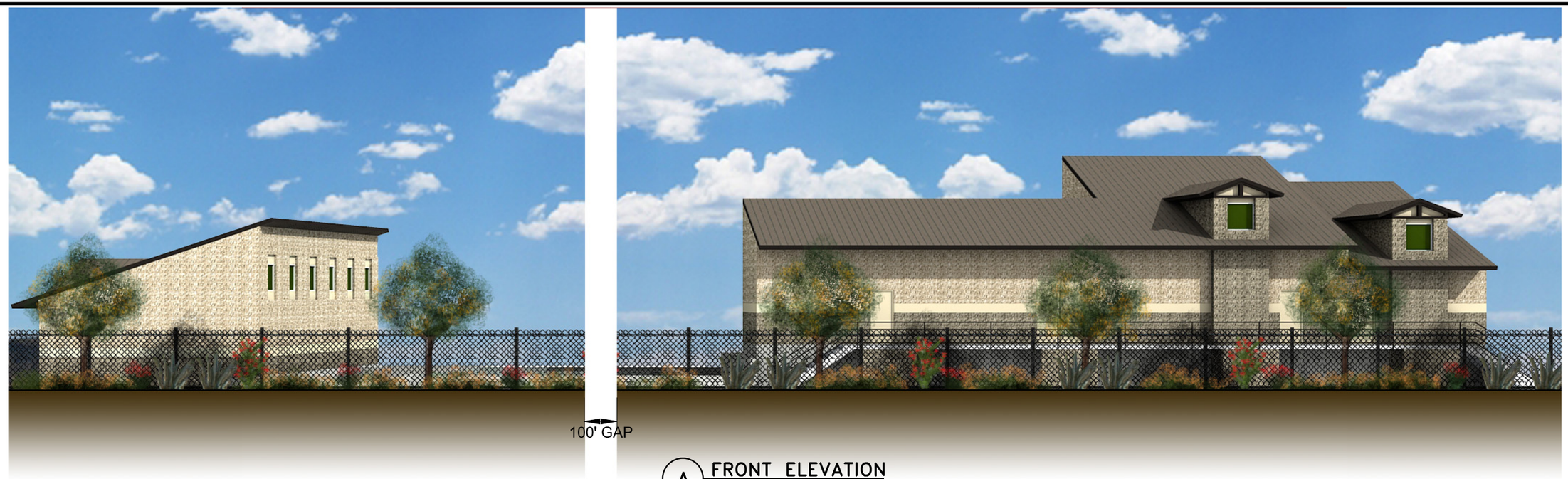

A FRONT ELEVATION
VIEW FROM THE WEST

B REAR ELEVATION
VIEW FROM THE EAST

VICTOR VALLEY WASTEWATER RECLAMATION AUTHORITY
HESPERIA WRP - PRELIMINARY DESIGN REPORT

HDR

carollo

CONCEPTUAL ARCHITECTURAL ELEVATIONS

FIGURE 10A.1

HESPERIA WATER RECLAMATION PLANT

DESIGN INFORMATION MEMORANDUM NO. 11A

ELECTRICAL POWER AND DISTRIBUTION

Project Name:	Hesperia and Apple Valley Scalping WRPs, Raw Sewage Lift Station and Force Mains		
Client:	Victor Valley Wastewater Reclamation Authority	**Date:**	December 2009

INTRODUCTION

The purpose of this Design Information Memorandum (DIM) No. 11A is to describe the preliminary basis of design for the electrical equipment for the Hesperia Water Reclamation Plant (WRP).

ELECTRICAL DESIGN LOADS

Table 11A.1 summarizes the anticipated new plant loads and the planned capacity at each electrical feed.

Table 11A.1 Electrical Loads
Hesperia WRP Design Information Memoranda
Victor Valley Wastewater Reclamation Authority, California

Item	Connected Load	Demand Load	MCC/MSB
Main Switchgear	1082A	1082A	MSB (1600A) bus
MCC	490	490	MCC (600A) bus

ELECTRICAL SYSTEM

Electrical Design Criteria

Site Power

480 VAC power to the site will be provided by an underground feed from Southern California Edison (SCE).

Main Switch Board (MSB) / Motor Control Center (MCC)

The MSB/MCC will be installed in an electrical room. The design will be based on 2008 National Electrical Code (NEC). The details are as follows:

- The MSB will be rated: 277/480 volt, 3-phase, 3-wire, 60K amps, interrupting and have a standby generator system dedicated to it. The generator will be switched to the system with an Automatic Transfer Switch (ATS). The switch will be interlocked with the Utility power feed so that the ATS will not switch back until Utility power is restored.
- The MCC will be rated: 277/480 volt, 3-phase, 3-wire, 60K amps.
- The MCC will be sub-fed from the MSB.

- MSB / MCC construction: NEMA 1 Gasketed, 21" Depth, Tin plated copper buses.
- Lighting panels will be served by dry transformers, will be wall-mounted and grounded per NEC 250 for separately derived system.

Motor Control

- Fixed speed motors up to 40 HP: Across the line starters.
- Fixed speed motors over 40 HP: Reduced voltage soft starter (RVSS).
- Variable frequency drives (VFDs) will be used where variable speed control is needed.
- VFD Criteria: for motors 75 HP and above, 18-pulse. For motors less than 75 HP, 6 pulse with input and output reactors.

Conduit

- Dry areas: Galvanized rigid steel.
- Outdoors, wet areas and corrosive areas: PVC-coated galvanized rigid steel.
- Underground ducts: PVC schedule 40 encased in red slurry.

Wire

- Power; Thermoplastic type THHN/THWN.
- Instrument; Twisted shielded pair, 600 volt, Type TC; 16 gauge minimum.
- Data Cables; as required.

Lighting

- Indoor Areas: Fluorescent, electronic ballast, T8 lamp. Lighting levels appropriate for each occupancy or process area.
- Outdoor lighting for safety and process access. High Intensity Discharge (HID) Metal Halide lamp.

Standby Generator

A standby generator and Automatic Transfer Switch (ATS) will be installed to provide automatic standby power for the Hesperia WRP.

Design Criteria

- Voltage: To match utility power, 277/480 volt, 3 phase, 3 wire, 60 Hz.
- Fuel: Diesel.
- Capacity: The standby generator will be capable of serving the Hesperia WRP maximum demand; 350 kW.
- Location: Hesperia WRP exterior.
- Day tank sized for 8-hour runtime.
- Sound attenuating outdoor enclosure.
- Critical exhaust silencer.

Equipment Description

The standby generator will be a diesel-fueled, concrete-pad mounted type with an external diesel fuel storage tank. Fuel capacity will be sized for 8 hours of operation at normal load. The generator will be connected to the Hesperia WRP MCC through an ATS. When in automatic mode, the ATS will sense a utility power failure, start the standby generator, transfer load to the generator, and then will return the load to the utility service when utility power has become available and is stable. The ATS also provides automatic exercise programming for the generator.

Construction Materials

The standby generator will be specified with the necessary components needed for the application, such as an external fuel tank, a critical grade exhaust silencer, outdoor sound attenuated enclosure, and a block heater. Equipment will be standard manufacturer's models. The unit will meet all applicable local emissions requirements, including those for particulate emissions. The standby generator will be installed on a mass concrete pad outdoors.

Control Description

The standby generator will be controlled by a solid state configurable controller in the ATS. There will be a number of configurable points, but the major points are four time delays as follows:

- Time delay to start generator after loss of Utility power, typically 30 seconds.
- Time delay to transfer load to generator, typically 30 seconds.
- Time delay to transfer back to Utility, typically 15 minutes.
- Time delay to stop generator for cool down, typically five minutes.

In addition, it will be possible to configure various exercise and test options for the standby generator such as weekly, bi-weekly, or monthly start-and-run with or without load transfer.

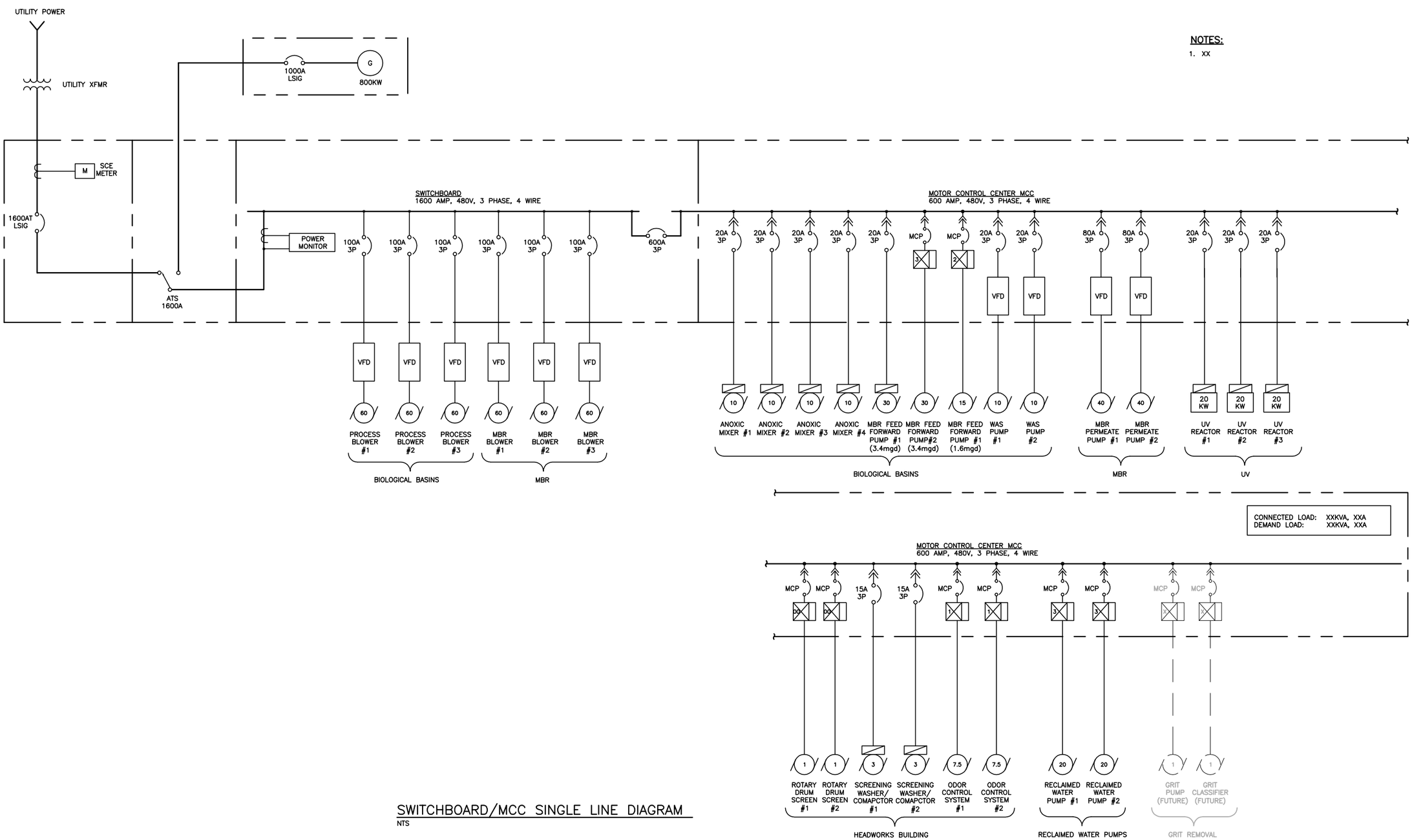

SWITCHBOARD/MCC SINGLE LINE DIAGRAM
NTS

VICTOR VALLEY WASTEWATER RECLAMATION AUTHORITY
HESPERIA WRP - PRELIMINARY DESIGN REPORT

HDR

carollo

HESPERIA WRP - SINGLE LINE

FIG.11A-E001

NOTES:

1. XX

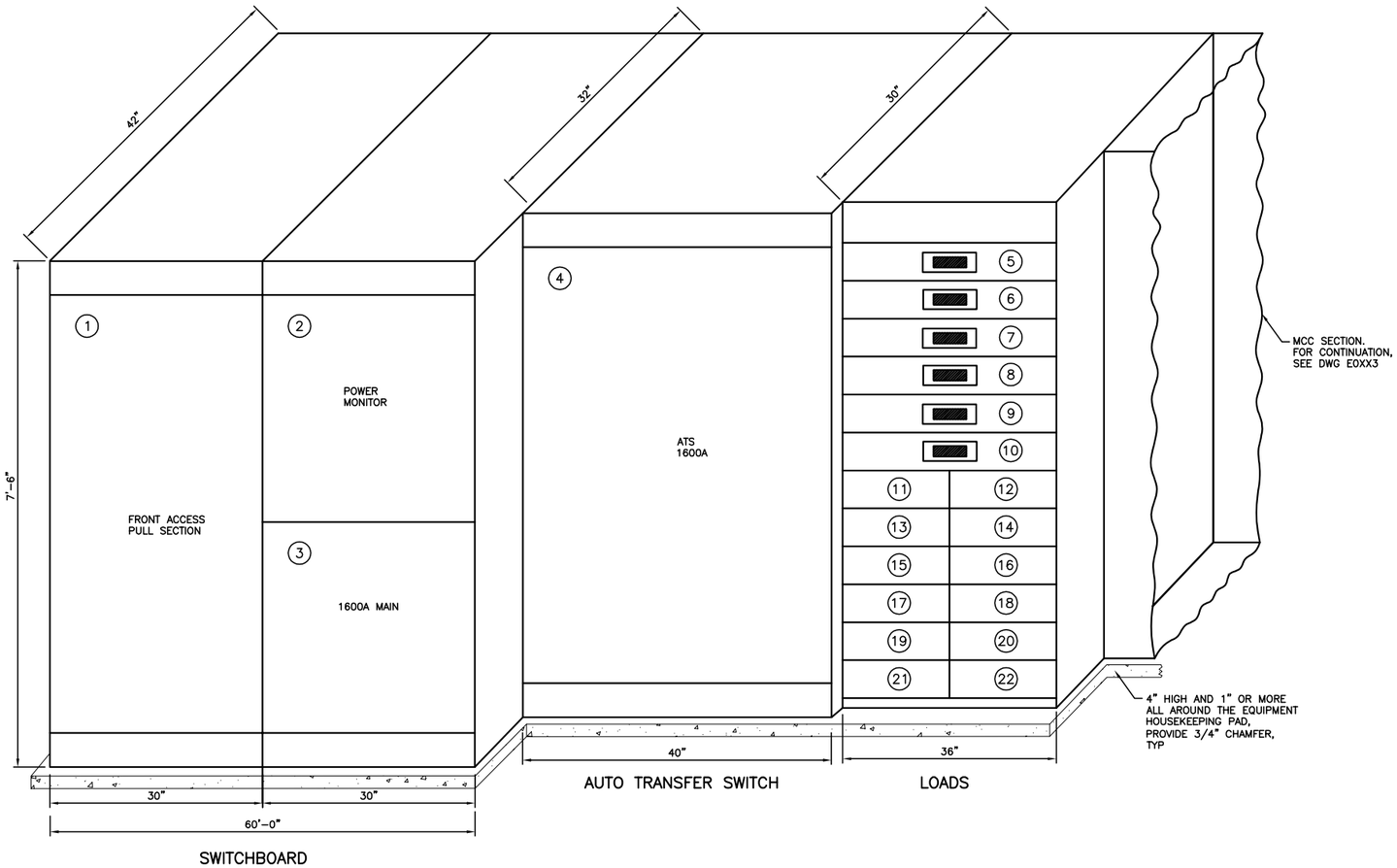

SWITCHBOARD ELEVATION

NTS

SWITCBOARD		
ITEM	DESCRIPTION	REMARK
1	PULL SECTION	
2	POWER MONITOR	50A, 3P BREAKER
3	MAIN BREAKER	1600A, 3P BREAKER
4	AUO TRANSFER SWITCH (ATS)	1600 AMP RATIMG
5	PROCESS BLOWER #1	VFD
6	PROCESS BLOWER #2	VFD
7	PROCESS BLOWER #3	VFD
8	MBR BLOWER #1	VFD
9	MBR BLOWER #2	VFD
10	MBR BLOWER #3	VFD
11	SPACE	
12	SPACE	
13	SPACE	
14	SPACE	
15	SPACE	
16	SPACE	
17	SPACE	
13	SPACE	
14	SPACE	
15	SPACE	
16	SPACE	
17	SPACE	

VICTOR VALLEY WASTEWATER RECLAMATION AUTHORITY
HESPERIA WRP - PRELIMINARY DESIGN REPORT

HDR

carollo

HESPERIA WRP - SWITCHGEAR ELEVATION

FIG.11A-E002

NOTES:

1. XX

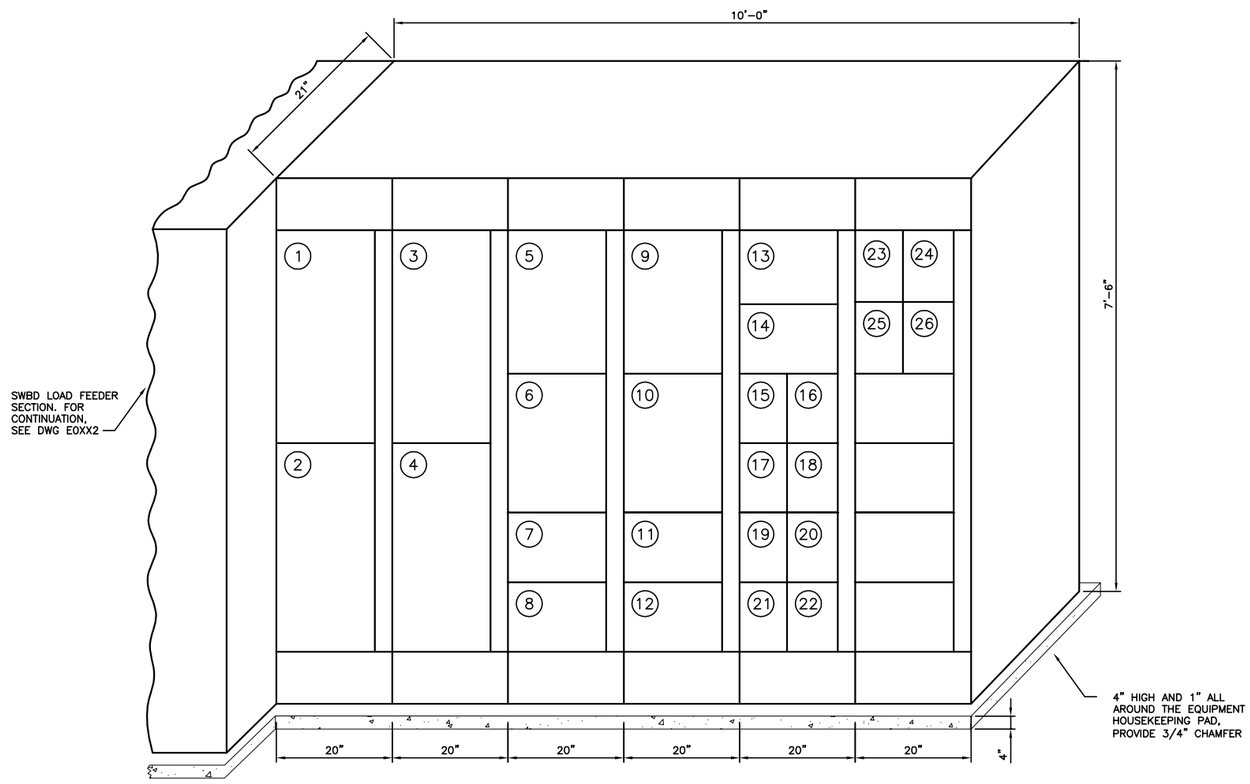

MCC ELEVATION

NTS

MCC		
ITEM	DESCRIPTION	REMARK
1	WAS PUMP #1	VFD
2	WAS PUMP #2	VFD
3	MBR PERMEATE PUMP #1	VFD
4	MBR PERMEATE PUMP #2	VFD
5	MBR FEED FORWARD PUMP #1	SIZE 3 STARTER (3.4 mgd)
6	MBR FEED FORWARD PUMP #2	SIZE 3 STARTER (3.4 mgd)
7	MBR FEED FORWARD PUMP #1	SIZE 2 STARTER (1.6 mgd)
8	SPACE	
9	RECLAIMED WATER PUMP #1	SIZE 3 STARTER
10	RECLAIMED WATER PUMP #2	SIZE 3 STARTER
11	ODOR CONTROL SYSTEM #1	SIZE 1 STARTER
12	ODOR CONTROL SYSTEM #12	SIZE 1 STARTER
13	ROTARY DRUM SCREEN #1	SIZE 00 STARTER
14	ROTARY DRUM SCREEN #2	SIZE 00 STARTER
15	SCREENING WASHER/COMPACTOR #1	15A, 3P BREAKER
16	SCREENING WASHER/COMPACTOR #2	15A, 3P BREAKER
17	ANOXIC MIXER #1	20A, 3P BREAKER
18	ANOXIC MIXER #2	20A, 3P BREAKER
19	ANOXIC MIXER #3	20A, 3P BREAKER
20	ANOXIC MIXER #4	20A, 3P BREAKER
21	UV REACTOR #1	20A, 3P BREAKER
22	UV REACTOR #2	20A, 3P BREAKER
23	UV REACTOR #3	20A, 3P BREAKER
24	SPACE	
25	GRIT PUMP (FUTURE)	SIZE XX STARTER
26	GRIT CLASSIFIER (FUTURE)	SIZE XX STARTER

VICTOR VALLEY WASTEWATER RECLAMATION AUTHORITY
HESPERIA WRP - PRELIMINARY DESIGN REPORT

HDR

carollo

HESPERIA WRP - MCC ELEVATION

FIG.11A-E003

DESIGN INFORMATION MEMORANDUM NO. 12A

INSTRUMENTATION AND CONTROLS

Project Name:	Hesperia and Apple Valley Scalping WRPs, Raw Sewage Pump Station and Force Mains		
Client:	Victor Valley Wastewater Reclamation Authority	**Date:**	December 2009

INTRODUCTION

The purpose of this Design Information Memorandum (DIM) No. 12A is to describe the preliminary instrumentation and controls (I&C) basis of design for the Hesperia Water Reclamation Plant (WRP).

INSTRUMENTATION AND CONTROLS (I&C) BASIS OF DESIGN

System Overview

The VVWRA employs a combination of Allen Bradley PLC 5/20E and SLC500 series Programmable Logic Controllers (PLCs) to monitor and control their Westside WRP. The PLCs communicate using Ethernet over a fiber optic backbone. A similar strategy is proposed for the Hesperia WRP.

Within a proposed control room, the operators will interface with the system using the Wonderware Human Machine Interface (HMI). At key locations in the plant, an Industrial Personal Computer (IPC) will be loaded with the Wonderware screens, and would also serve as remote HMIs.

Instrumentation and Control

Purpose and Intent

The instrumentation and control (I&C) system will be designed to monitor and control the Hesperia WRP.

Design Criteria

- The PLC that will be used to monitor and control the Hesperia WRP various systems will be the Allen Bradley (AB) PLC Model 5/20 E. VVWRA has standardized around this model PLC for all remote stations and in-plant controls. In addition, the existing Westside WRP operators and Information Technology (IT) staff have been trained in the maintenance, operation, and programming of the AB PLC 5/20E. Finally, the VVWRA keeps PLC 5/20 E spare Central Processing Units (CPUs) and input and output modules, both analog and digital. The software that will be used to program the AB PLC 5/20 E will be the RS LOGIX 5.
  - Allen Bradley 1771-A4B, 16-slot chassis

  - Allen Bradley 1785-L20B, PLC 5/20E controller, 16k RAM, supporting TCP/IP Ethernet communications
  - Allen Bradley 1771-IL, Analog Input Module, 8 Isolated Inputs, 4-20 mA
  - Allen Bradley 177-OFE2, Analog Output Module, 4 / 4-20 mA Outputs
  - Allen Bradley 1771-IA16, 16 channel AC Input Module
  - Allen Bradley 1771-OAD, 16 channel AC Output Module
  - Allen Bradley 1771-P7, Power Supply, Rack Mount, 2.88 A @ 24 VDC
- The HMI will provide the operator with the ability to monitor and control local processes at the field PLCs using the Allen Bradley Panelview Plus 1000s. Similar to the AB PLC 5/20 E, the VVWRA has standardized around this model of local HMI and use them in conjunction with the AB PLC 5/20 E at the field PLC cabinets. The operations and IT staff own a copy of RS View, the Panelview software tool, and can program and configure the Panelview.
  - Allen Bradley 2711-K10C4B2 Panel View 1000+, Ethernet and RS 232(DH-485), Communication & RS-232 port
- The HMI providing supervisory control and data acquisition (SCADA) of the entire treatment plant processes will be Wonderware. VVWRA staff is already trained in the programming and configuration of the Wonderware System. VVWRA need only to purchase additional client licenses to expand their system for the Hesperia WRP.
- The PLCs will communicate with the central control room using Ethernet protocol over fiber. Typically, the PLC and local HMI will connect to an Ethernet switch. A 10/100 MBPS Ethernet to fiber optic converter will also connect to the switch and allows the PLC to be placed on the network.
  - Ethernet to Fiber Optic Converter: (N-TRON 509FX)
  - Ethernet Switch: HP Procurve 1700-8
- The design will include the following instruments (and proposed manufacturer):
  - Electromagnetic flowmeters: Sparling, Siemens.
  - Thermal mass flowmeters: FCI with Vortab
  - Pressure indicating transmitters: Rosemount, Siemens
  - Gauges, and non-mercury filled switches: Dwyer
  - Ultrasonic level indicating transmitters: Siemens (Milltronics Hydroranger)
  - Hydrostatic level indicating transmitters: KPSI, Rosemount, Siemens
  - Non-Mercury filled level switches
  - Water quality analyzers including pH, turbidity, conductivity, chlorine residual, and dissolved oxygen: HACH
  - Samplers: HACH

Preliminary Control Strategies

Influent Pump Station

The proposed off-site Hesperia lift station will pump raw wastewater to the screening facility. Pump operation will be automatic based on level sensors and level switches provided in the pump station wet well. A flowmeter will measure the pump station discharge to the screening facility.

Screening

Operation of fine screens will be automatic, based on the water level differential across the screen. The water level upstream and downstream of the screens will be determined by two ultrasonic level sensors. When head loss across the screen reaches an operator-selected level, the screen will start a cleaning cycle, and the cleaning will continue until the levels equalize. Alternatively, the screens may be activated with operator-defined timers.

Screenings from the fine screens will be discharged to the screenings washer/compactor. Operation of each washer/compactor is tied to operation of the corresponding screens. The screenings washer/compactor and wash water valve will start/open on a signal from the screen. The washer/compactor will continue to operate for an adjustable period of time after the screen cleaning cycle is complete.

Aeration Basins

Centrifugal blowers will supply process air to the aeration basins. The blower operation will be automatically controlled based on operator selection of either DO control or air rate flow to the aeration tanks.

The Membrane Bioreactor (MBR) Feed Pump Station will pump mixed liquor to the MBR basins. Operation of the pumps will be automatic based on level sensors and level switches provided in the pump station wet well provided a permissive system ready signal is received from MBR system control. A flowmeter on common pump discharge header pipe will monitor flow rate and the signal will be used to control operation of the MBR system.

Membrane Bioreactor (MBR)

All valves and control devices of the MBR system will be interlocked through the MBR system PLC to allow smooth and continuous automatic operation. Valves will open, close and/or modulate, depending on signals from the PLC. These signals will be predetermined through PLC programming and allow the system to operate at optimal conditions. Variable speed pumps will also be controlled by the PLC and vary their vacuum/flow output based on signals from the PLC.

All operating parameters will be continuously monitored by the PLC. If an alarm or emergency condition occurs, the PLC signal will instruct the various components to change operation conditions and/or shut down the system and alert the operator for attention of the problem. In the event of an alarm condition that is detrimental to the equipment, PLC will have ability to shut down either one train or the whole system.

The modes of operation for the MBR system are as follows: off, production, relax, backpulse, standby, sludge wasting, maintenance clean, recovery clean, and manual. Other than the off and the manual mode, all modes of operation will be automatically controlled based on the PLC programming and operator input. Operation of the various automatic modes of the MBR system is described below.

- *Production*

  The MBR system will treat mixed liquor based on a dynamic hydraulic reference level in the system. As the MBR tank level increases indicating increase in plant flow, the permeate pump speeds up automatically and vice versa. Trans-membrane pressure (TMP) across the membrane will be monitored and initiate membrane cleaning cycle when the TMP value exceeds a preset value. Air scouring through coarse bubble

diffusers will keep the membrane clean and its operation will be controlled by the PLC.

- *Relax*
  In relax mode, the PLC will stop permeating and the membrane will be relaxed for predetermined time set by the operator. Operator will select relax frequency and duration.
- *Backpulse*
  If required, treated water can be periodically reversed back through the membranes using the permeate pumps to keep the membranes clean. The PLC will control all stages of this operation automatically based on PLC program and operator input. Operator will select backpulse frequency, duration, set flow rate, and TMP.
- *Standby*
  Several triggers such as low MBR tank level, low permeate demand, etc. may cause a train to go to standby mode rather than shutting it down. PLC program automatically switch between production mode and standby mode.
- *Sludge Wasting*
  To achieve desired solids retention time (SRT), sludge from the MBR tanks will be wasted periodically. Operator will set duration, frequency and flow of sludge.
- *Maintenance and Recovery Cleaning*
  Membrane cleaning will be fully automated and controlled by the PLC program. In addition to maintenance cleaning and recovery cleaning when the membrane stops production and uses chemicals for cleaning, continuous air scouring during production and relaxation will also keep the membranes clean.

UV Disinfection System

Permeate from membrane bioreactor (MBR effluent) will enter three UV disinfection reactors designed to work in parallel. A flow control valve and a flowmeter on each UV reactor inlet pipe will control permeate flow to the reactor. Depending on the permeate flow rate at any time, UV system PLC will allow permeate to enter one or more UV reactors.

The UV disinfection system operation will be automatically controlled by the UV system PLC to achieve a specific level of disinfection in the MBR effluent. In addition, based on operator selection, the system can be operated in manual or off mode. The three modes of operation are described below.

- *Automatic Mode*
  The UV system PLC will control the operation of all UV reactors by ensuring that the expected disinfection level is met. To achieve the expected disinfection level, the following parameters will be taken into account:
  - Actual flow to each UV reactor will come from the flowmeter installed on MBR permeate influent pipe to the UV reactor.
  - Target UV dose will be defined during the design stage as a preset value which is field adjustable, typically 15 percent above the required or minimum dose.
  - The UV PLC calculates the current UV dose and adjusts the number of UV reactors in operation as well as varying the lamp power to keep the current UV dose higher than or equal to the target UV dose. The average UV intensity will be measured by a UV intensity sensor. This signal will be used by the UV system control to “dose pace” in order to optimize energy consumption and achieve a specific level of disinfection.

- *Manual Mode*
  - The UV system reactors can be turned ON and OFF independent of the PLC. Each reactor will have a manual override to allow the operator to individually turn each reactor ON or OFF. When the reactor is on via manual mode, the lamp power will always be 100 percent.
- *Off Mode*
  - In the off mode, the UV reactor lamps are off. However, the lamp cleaning wiper sequence continues to operate in order to keep the quartz sleeves clean. In the off mode, MBR effluent will not be permitted to flow through the UV reactors as the effluent will exit the reactor without disinfection.

Reclaimed Water Pump Station

Reclaimed water pump station will pump reclaimed water to the proposed reclaimed (recycled) water distribution system and/or effluent disposal sites. Variable speed pumps will operate automatically based on level sensors and level switches provided in the pump station wet well. A flowmeter on the common pump discharge header will measure the pump station discharge to the reclaimed water system.

Other Miscellaneous Treatment Processes

The final design will likely include provisions for sodium hypochlorite addition to maintain chlorine residual in the recycled water distribution system.

Instrumentation and process Diagrams

The preliminary process and instrumentation diagrams are included at the end of this DIM No. 12A.

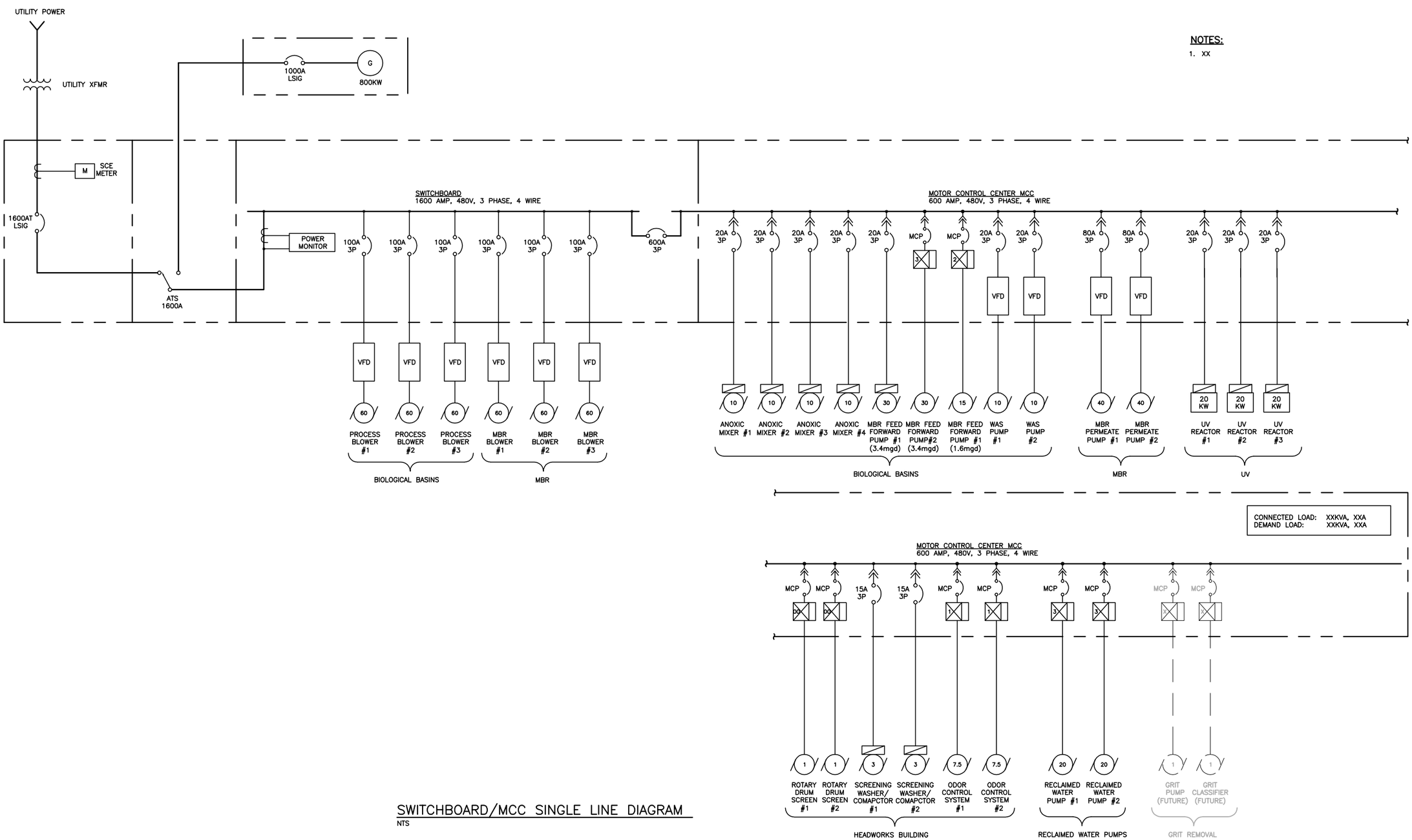

NOTES:

1. XX

SWITCHBOARD/MCC SINGLE LINE DIAGRAM

NTS

VICTOR VALLEY WASTEWATER RECLAMATION AUTHORITY
HESPERIA WRP - PRELIMINARY DESIGN REPORT

HDR

carollo

E001

NOTES:

1. XX

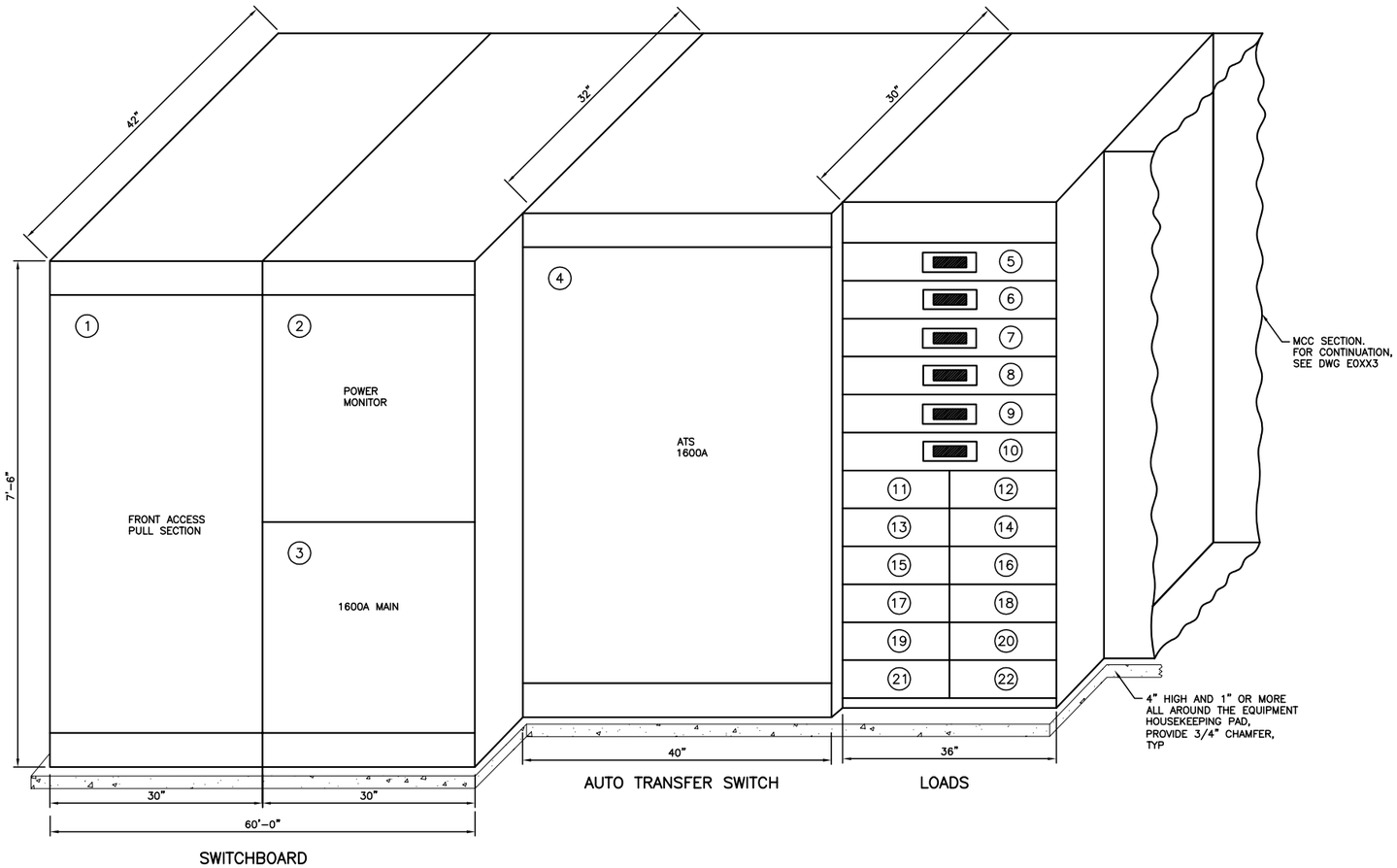

SWITCHBOARD ELEVATION

NTS

SWITCBOARD		
ITEM	DESCRIPTION	REMARK
1	PULL SECTION	
2	POWER MONITOR	50A, 3P BREAKER
3	MAIN BREAKER	1600A, 3P BREAKER
4	AUO TRANSFER SWITCH (ATS)	1600 AMP RATIMG
5	PROCESS BLOWER #1	VFD
6	PROCESS BLOWER #2	VFD
7	PROCESS BLOWER #3	VFD
8	MBR BLOWER #1	VFD
9	MBR BLOWER #2	VFD
10	MBR BLOWER #3	VFD
11	SPACE	
12	SPACE	
13	SPACE	
14	SPACE	
15	SPACE	
16	SPACE	
17	SPACE	
13	SPACE	
14	SPACE	
15	SPACE	
16	SPACE	
17	SPACE	

VICTOR VALLEY WASTEWATER RECLAMATION AUTHORITY
HESPERIA WRP - PRELIMINARY DESIGN REPORT

HDR

carollo

NOTES:

1. XX

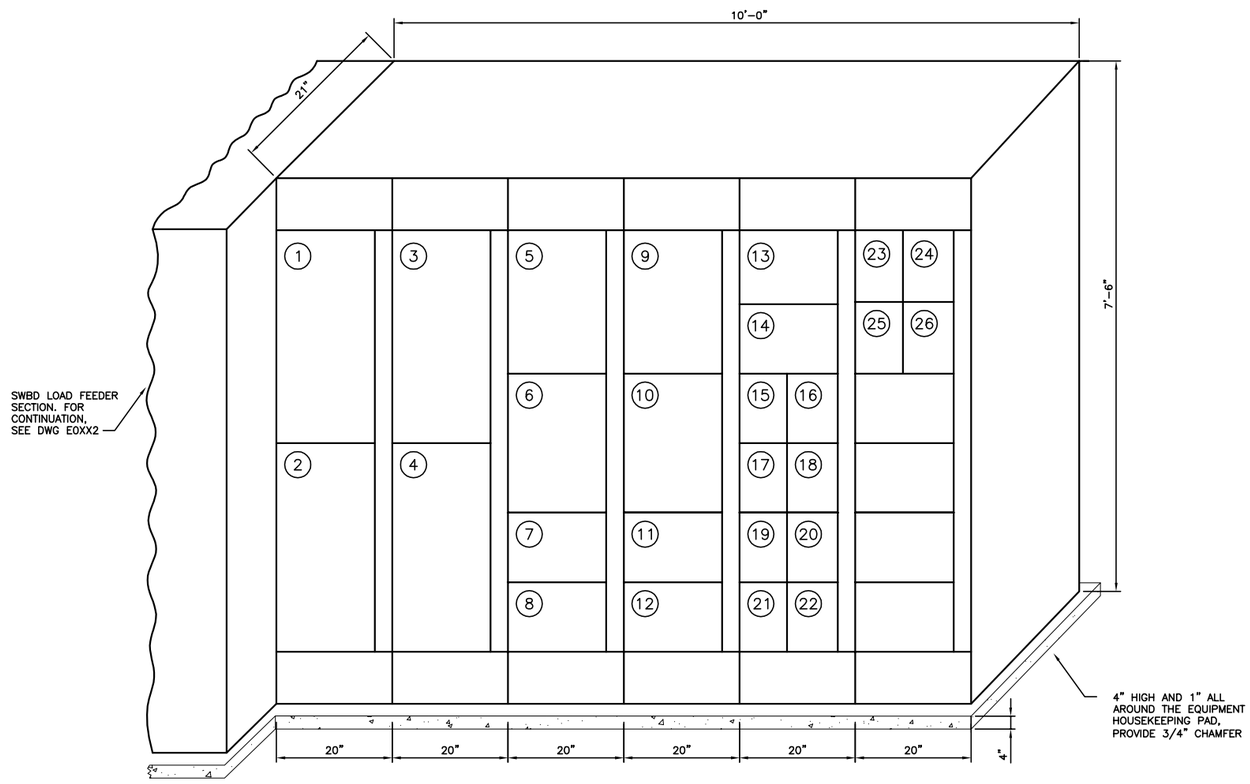

MCC ELEVATION

NTS

MCC		
ITEM	DESCRIPTION	REMARK
1	WAS PUMP #1	VFD
2	WAS PUMP #2	VFD
3	MBR PERMEATE PUMP #1	VFD
4	MBR PERMEATE PUMP #2	VFD
5	MBR FEED FORWARD PUMP #1	SIZE 3 STARTER (3.4 mgd)
6	MBR FEED FORWARD PUMP #2	SIZE 3 STARTER (3.4 mgd)
7	MBR FEED FORWARD PUMP #1	SIZE 2 STARTER (1.6 mgd)
8	SPACE	
9	RECLAIMED WATER PUMP #1	SIZE 3 STARTER
10	RECLAIMED WATER PUMP #2	SIZE 3 STARTER
11	ODOR CONTROL SYSTEM #1	SIZE 1 STARTER
12	ODOR CONTROL SYSTEM #12	SIZE 1 STARTER
13	ROTARY DRUM SCREEN #1	SIZE 00 STARTER
14	ROTARY DRUM SCREEN #2	SIZE 00 STARTER
15	SCREENING WASHER/COMPACTOR #1	15A, 3P BREAKER
16	SCREENING WASHER/COMPACTOR #2	15A, 3P BREAKER
17	ANOXIC MIXER #1	20A, 3P BREAKER
18	ANOXIC MIXER #2	20A, 3P BREAKER
19	ANOXIC MIXER #3	20A, 3P BREAKER
20	ANOXIC MIXER #4	20A, 3P BREAKER
21	UV REACTOR #1	20A, 3P BREAKER
22	UV REACTOR #2	20A, 3P BREAKER
23	UV REACTOR #3	20A, 3P BREAKER
24	SPACE	
25	GRIT PUMP (FUTURE)	SIZE XX STARTER
26	GRIT CLASSIFIER (FUTURE)	SIZE XX STARTER

VICTOR VALLEY WASTEWATER RECLAMATION AUTHORITY
HESPERIA WRP - PRELIMINARY DESIGN REPORT

HDR

carollo

E003

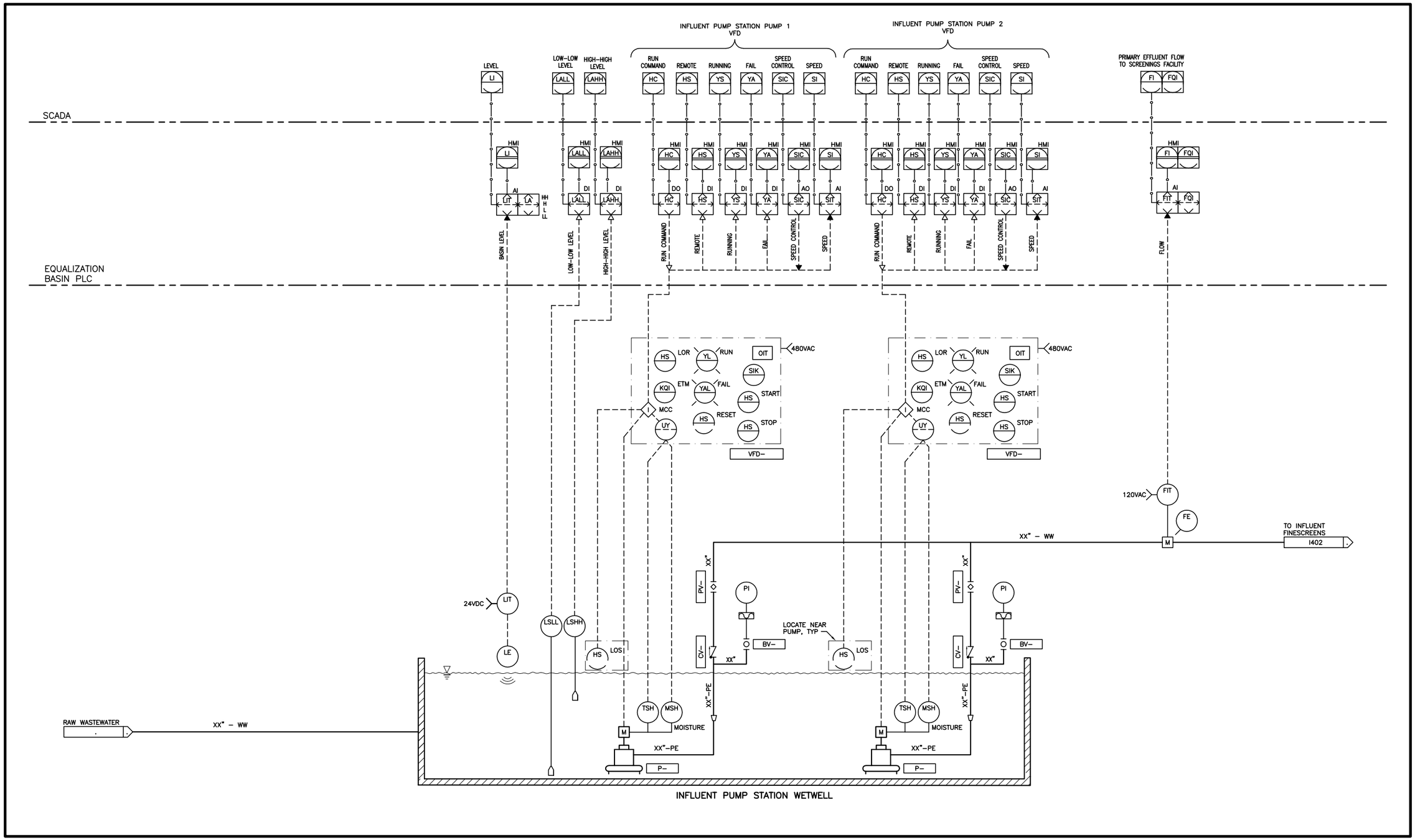

VICTOR VALLEY WASTEWATER RECLAMATION AUTHORITY
HESPERIA WRP - PRELIMINARY DESIGN REPORT

HDR

carollo

I401

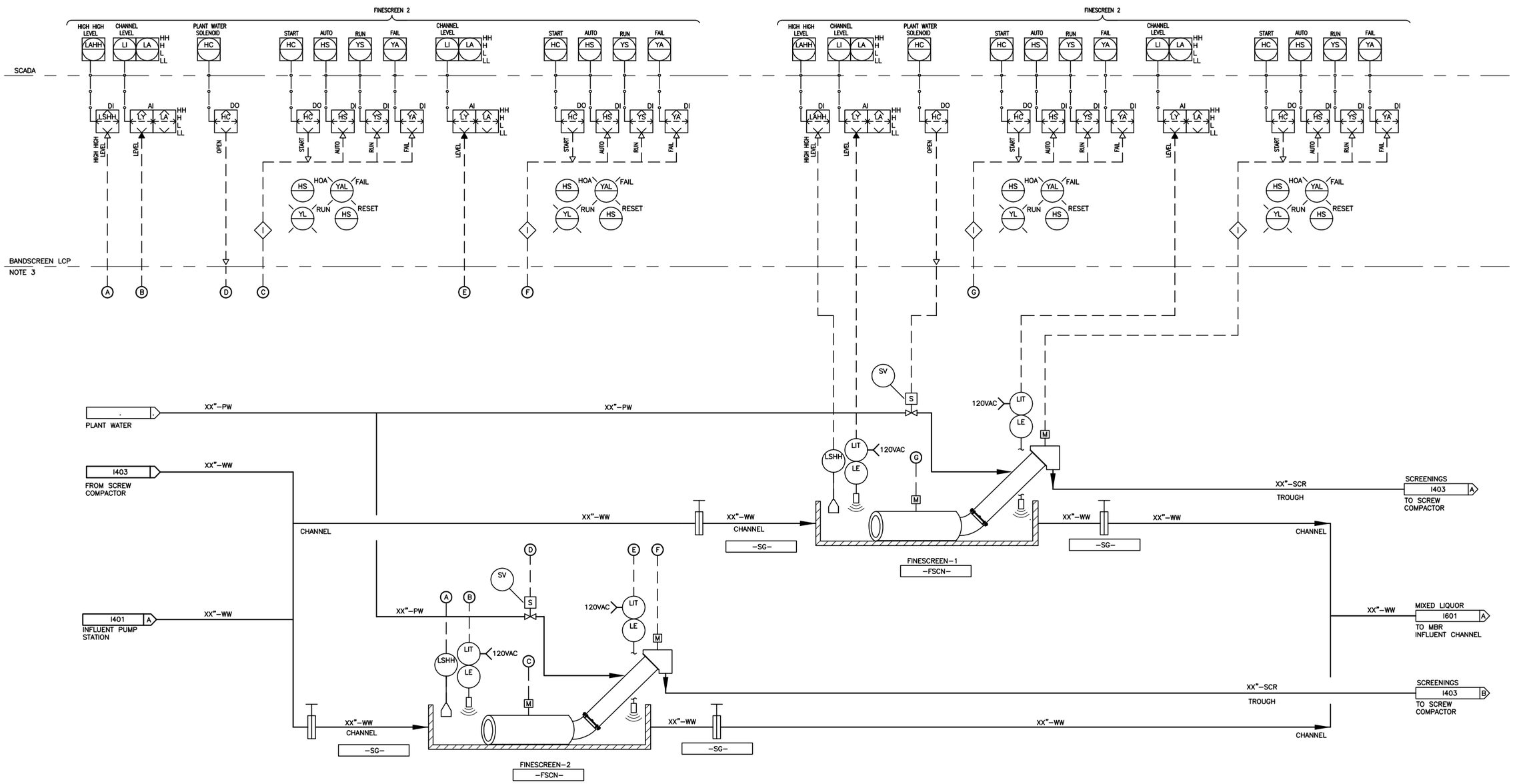

VICTOR VALLEY WASTEWATER RECLAMATION AUTHORITY
HESPERIA WRP - PRELIMINARY DESIGN REPORT

HDR

carollo

I402

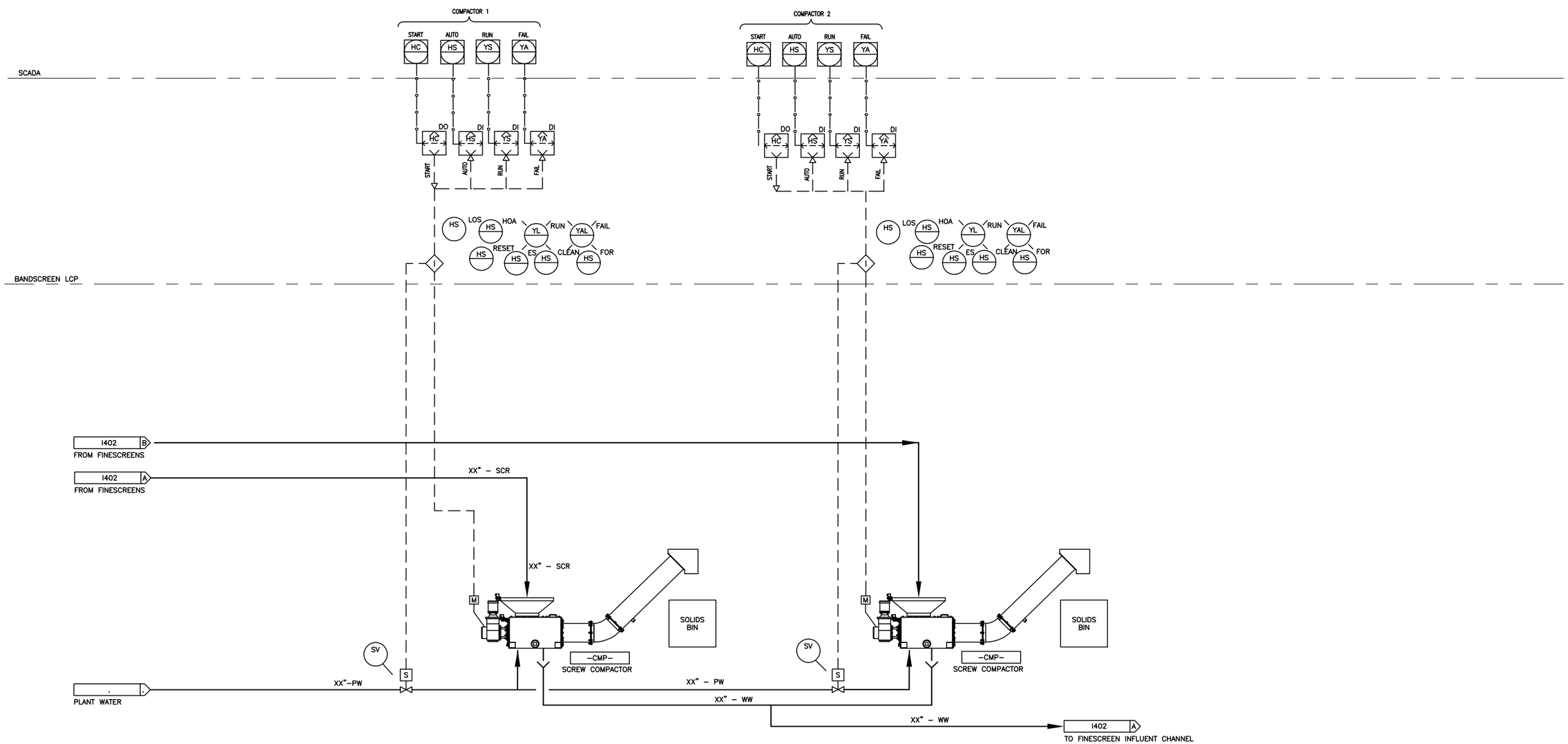

VICTOR VALLEY WASTEWATER RECLAMATION AUTHORITY
HESPERIA WRP - PRELIMINARY DESIGN REPORT

HDR

carollo

I403

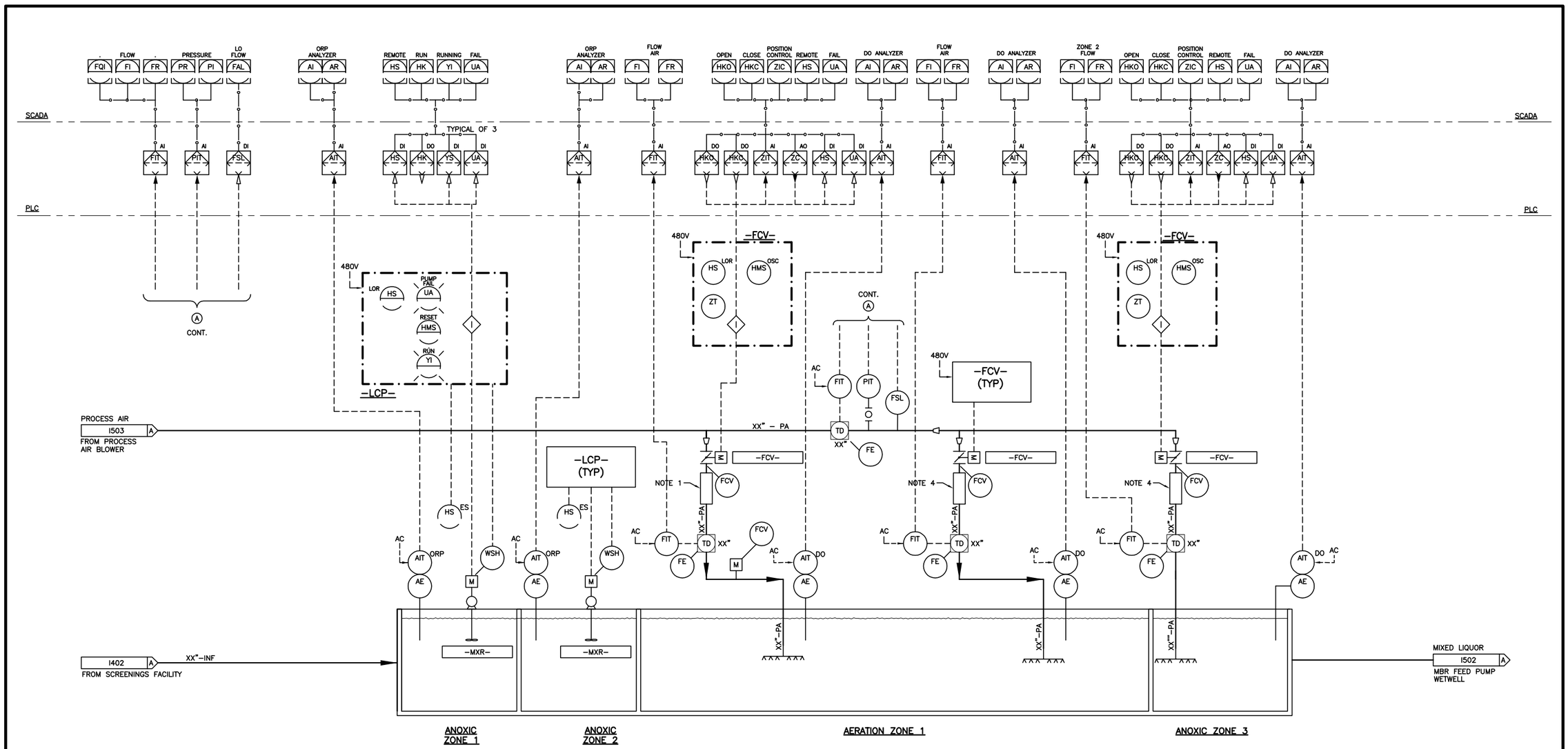

NOTES:

1. VORTAB AIRFLOW CONDITIONER.

VICTOR VALLEY WASTEWATER RECLAMATION AUTHORITY
HESPERIA WRP - PRELIMINARY DESIGN REPORT

HDR

carollo

I501

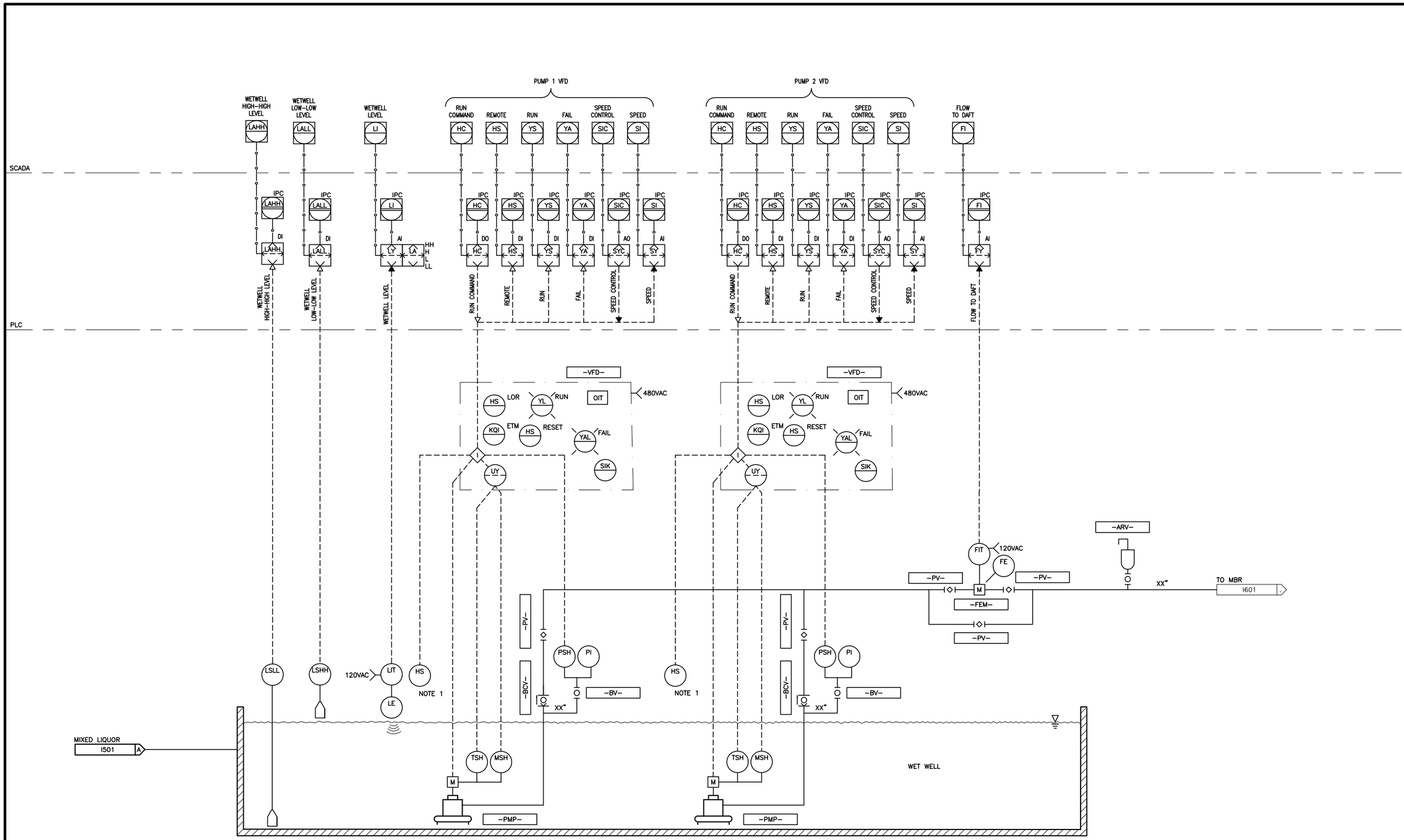

NOTES:

1. LOCATE NEAR PUMP.

VICTOR VALLEY WASTEWATER RECLAMATION AUTHORITY
HESPERIA WRP - PRELIMINARY DESIGN REPORT

HDR

carollo

I502

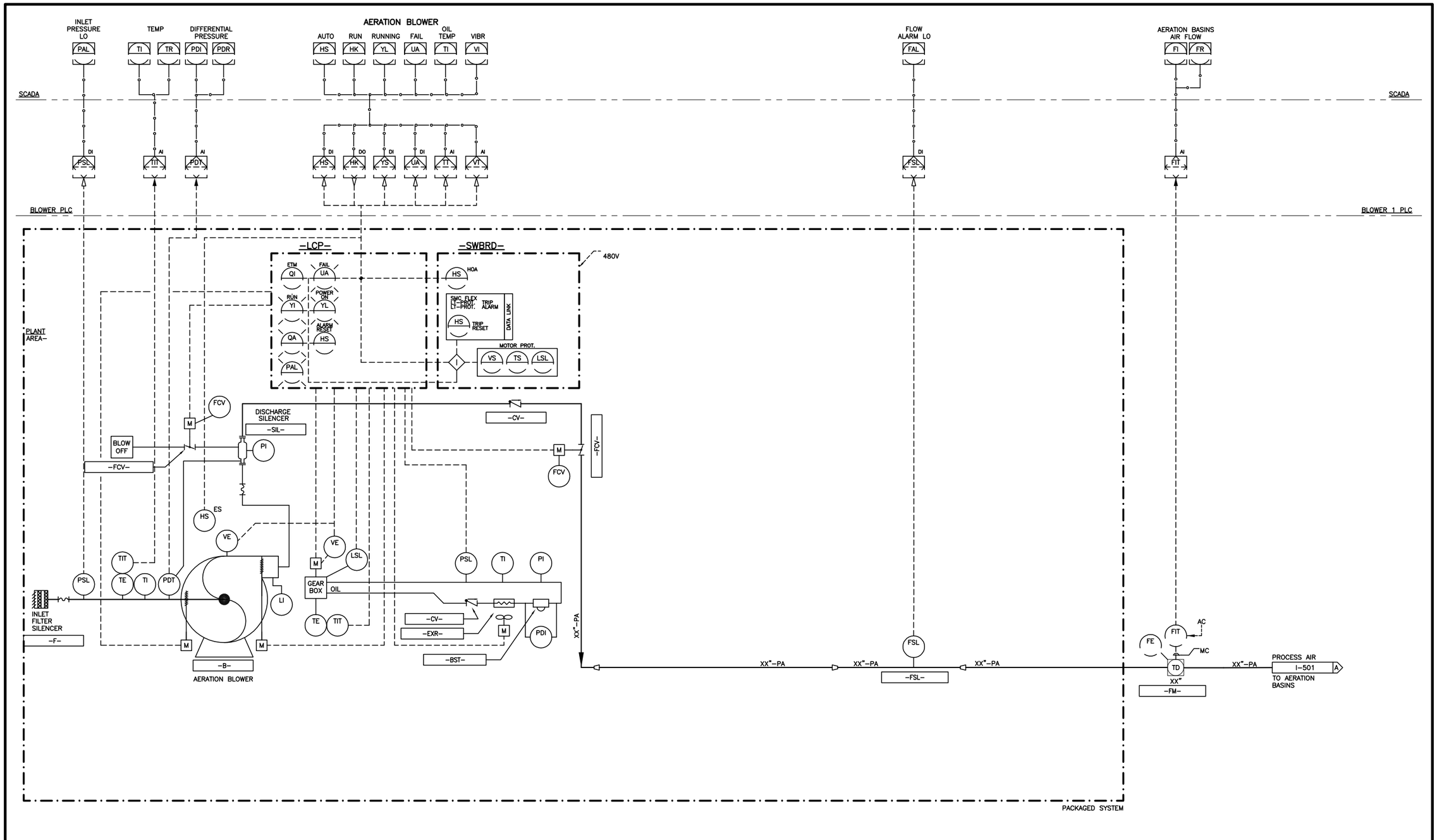

VICTOR VALLEY WASTEWATER RECLAMATION AUTHORITY
HESPERIA WRP - PRELIMINARY DESIGN REPORT

HDR

carollo

I503

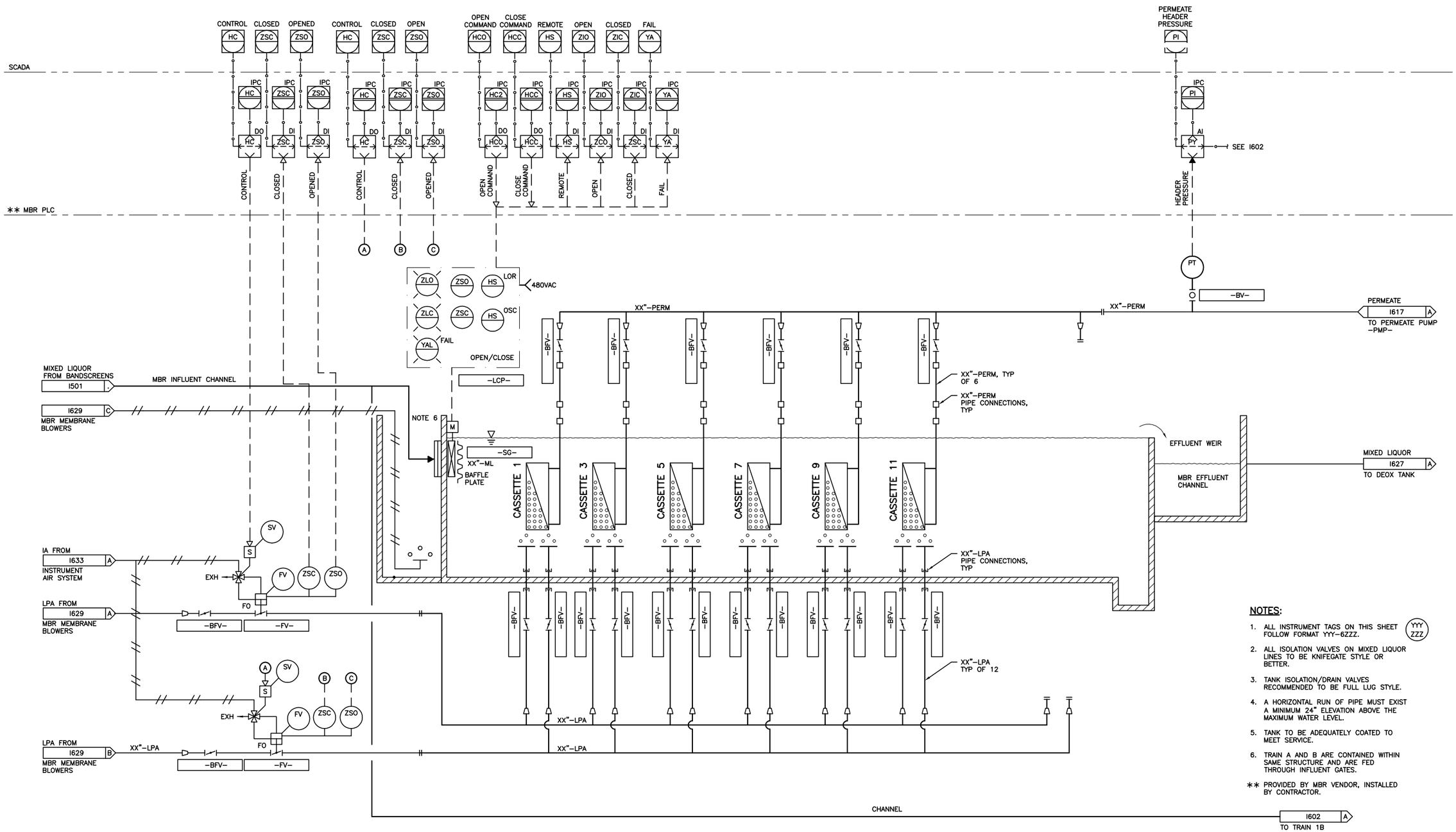

NOTES:

1. ALL INSTRUMENT TAGS ON THIS SHEET FOLLOW FORMAT YYY-6ZZZ.
2. ALL ISOLATION VALVES ON MIXED LIQUOR LINES TO BE KNIFEGATE STYLE OR BETTER.
3. TANK ISOLATION/DRAIN VALVES RECOMMENDED TO BE FULL LUG STYLE.
4. A HORIZONTAL RUN OF PIPE MUST EXIST A MINIMUM 24" ELEVATION ABOVE THE MAXIMUM WATER LEVEL.
5. TANK TO BE ADEQUATELY COATED TO MEET SERVICE.
6. TRAIN A AND B ARE CONTAINED WITHIN SAME STRUCTURE AND ARE FED THROUGH INFLUENT GATES.

** PROVIDED BY MBR VENDOR, INSTALLED BY CONTRACTOR.

VICTOR VALLEY WASTEWATER RECLAMATION AUTHORITY
HESPERIA WRP - PRELIMINARY DESIGN REPORT

HDR

carollo

I601

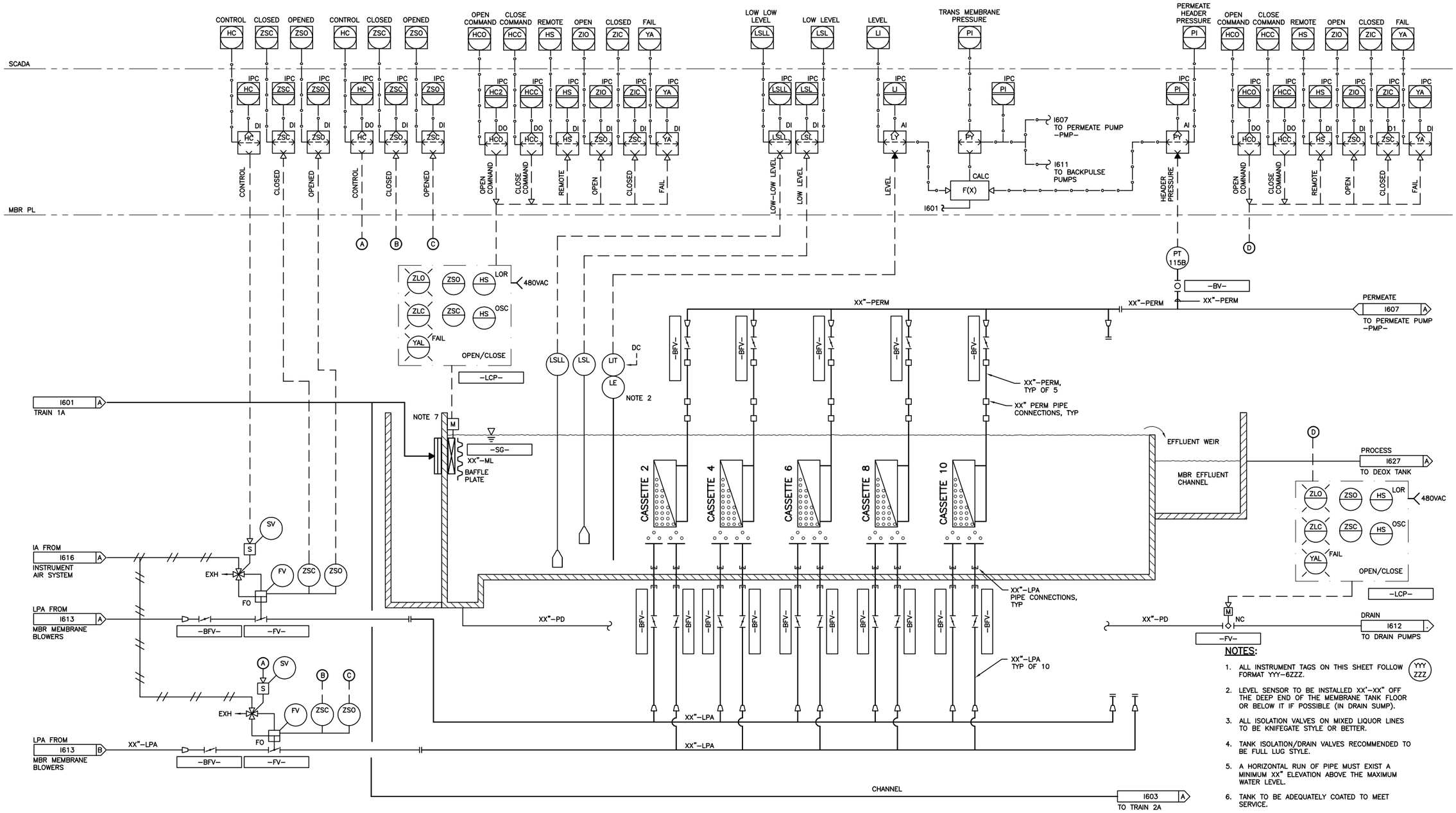

NOTES:

1. ALL INSTRUMENT TAGS ON THIS SHEET FOLLOW FORMAT YYY-6ZZZ.
2. LEVEL SENSOR TO BE INSTALLED XX'-XX" OFF THE DEEP END OF THE MEMBRANE TANK FLOOR OR BELOW IT IF POSSIBLE (IN DRAIN SUMP).
3. ALL ISOLATION VALVES ON MIXED LIQUOR LINES TO BE KNIFEGATE STYLE OR BETTER.
4. TANK ISOLATION/DRAIN VALVES RECOMMENDED TO BE FULL LUG STYLE.
5. A HORIZONTAL RUN OF PIPE MUST EXIST A MINIMUM XX" ELEVATION ABOVE THE MAXIMUM WATER LEVEL.
6. TANK TO BE ADEQUATELY COATED TO MEET SERVICE.
7. MEMBRANE TRAIN B IS CONTAINED IN SAME STRUCTURE AS TRAIN A AND FED THROUGH INFLUENT GATES AS SHOWN ON I601.

VICTOR VALLEY WASTEWATER RECLAMATION AUTHORITY
HESPERIA WRP - PRELIMINARY DESIGN REPORT

HDR

carollo

I602

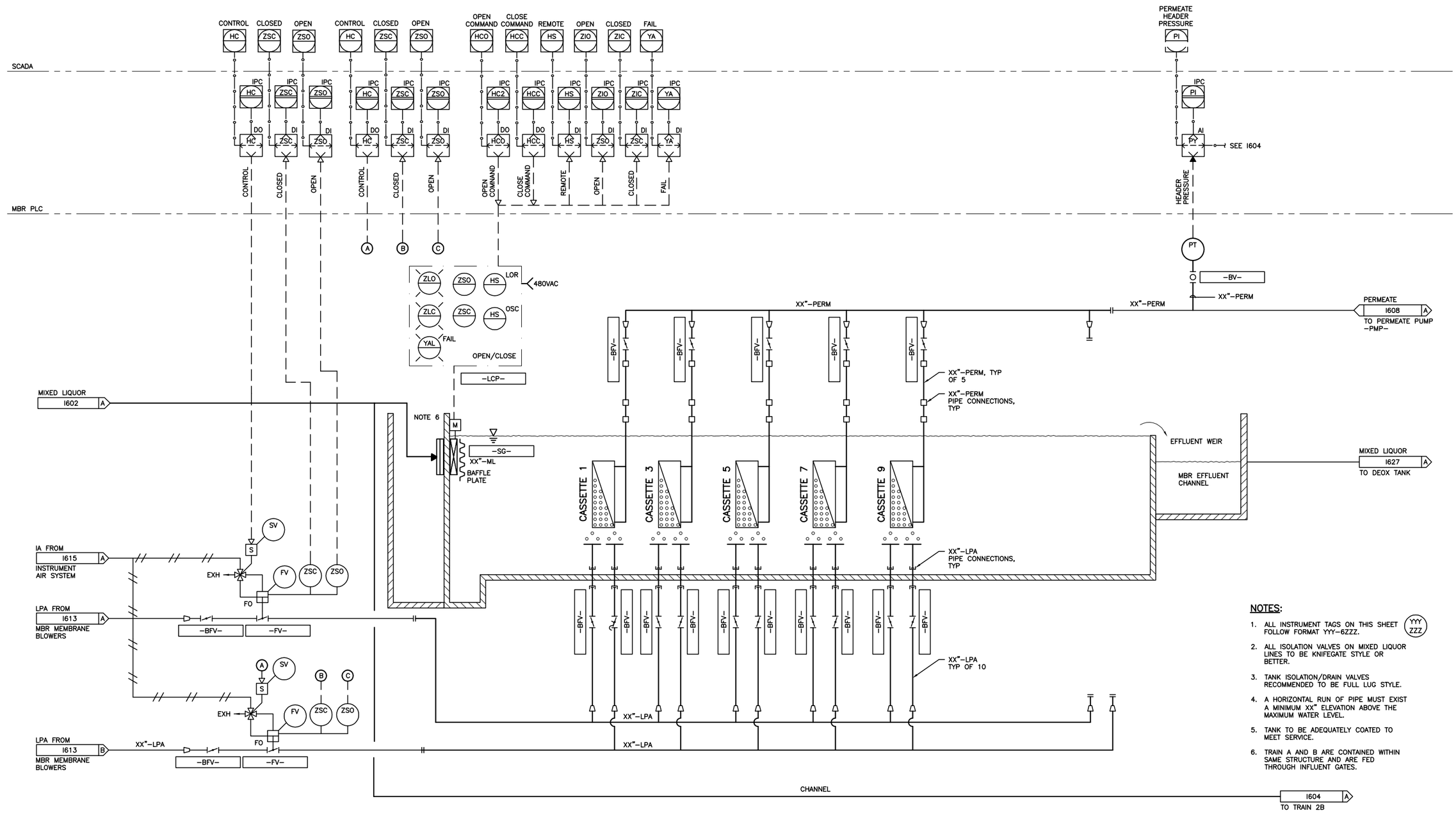

NOTES:

1. ALL INSTRUMENT TAGS ON THIS SHEET FOLLOW FORMAT YYY-6ZZZ. (YYY ZZZ)
2. ALL ISOLATION VALVES ON MIXED LIQUOR LINES TO BE KNIFEGATE STYLE OR BETTER.
3. TANK ISOLATION/DRAIN VALVES RECOMMENDED TO BE FULL LUG STYLE.
4. A HORIZONTAL RUN OF PIPE MUST EXIST A MINIMUM XX" ELEVATION ABOVE THE MAXIMUM WATER LEVEL.
5. TANK TO BE ADEQUATELY COATED TO MEET SERVICE.
6. TRAIN A AND B ARE CONTAINED WITHIN SAME STRUCTURE AND ARE FED THROUGH INFLUENT GATES.

VICTOR VALLEY WASTEWATER RECLAMATION AUTHORITY
HESPERIA WRP - PRELIMINARY DESIGN REPORT

HDR

carollo

I603

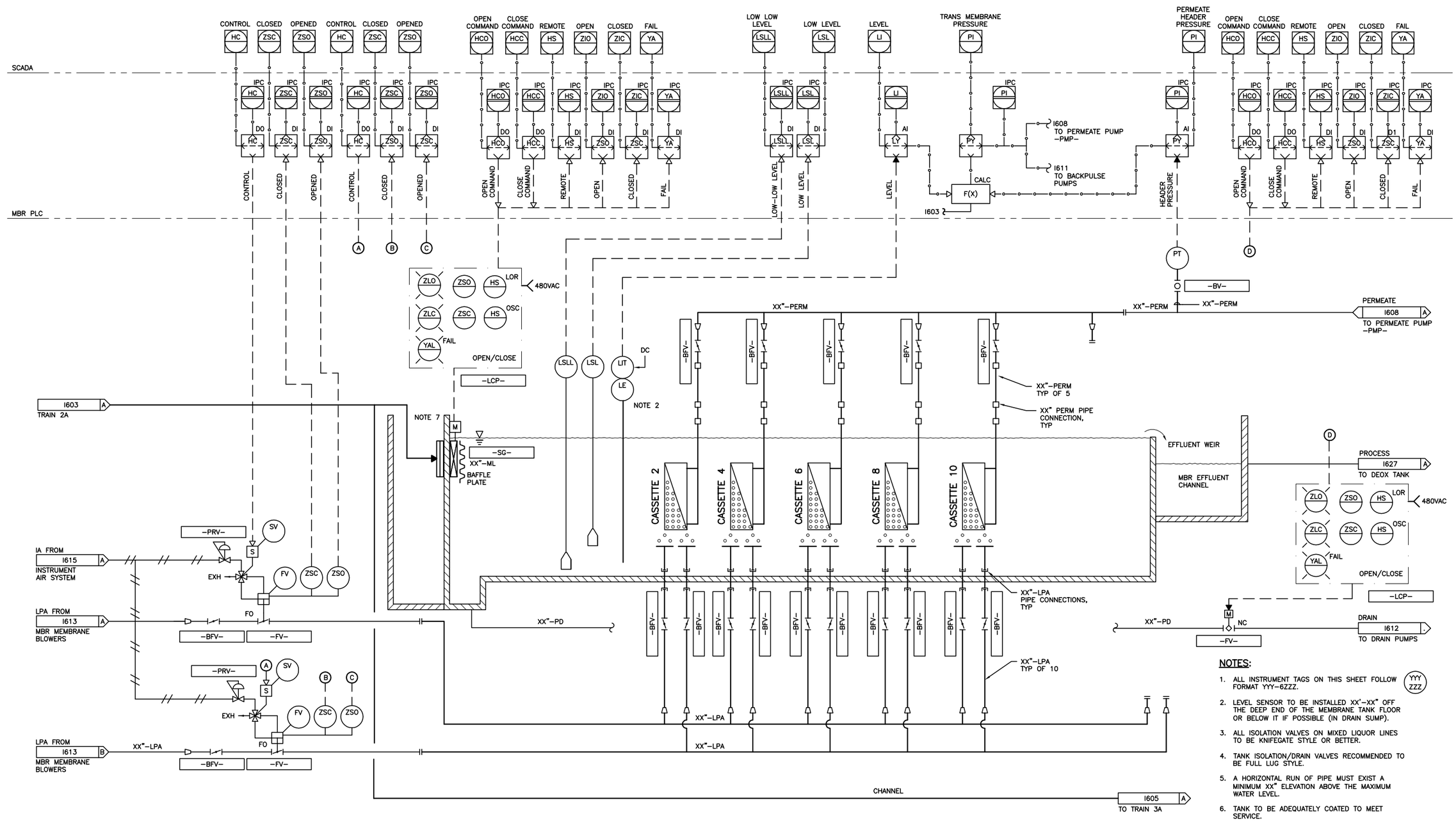

NOTES:

1. ALL INSTRUMENT TAGS ON THIS SHEET FOLLOW FORMAT YYY-6ZZZ.
2. LEVEL SENSOR TO BE INSTALLED XX'-XX" OFF THE DEEP END OF THE MEMBRANE TANK FLOOR OR BELOW IT IF POSSIBLE (IN DRAIN SUMP).
3. ALL ISOLATION VALVES ON MIXED LIQUOR LINES TO BE KNIFEGATE STYLE OR BETTER.
4. TANK ISOLATION/DRAIN VALVES RECOMMENDED TO BE FULL LUG STYLE.
5. A HORIZONTAL RUN OF PIPE MUST EXIST A MINIMUM XX" ELEVATION ABOVE THE MAXIMUM WATER LEVEL.
6. TANK TO BE ADEQUATELY COATED TO MEET SERVICE.
7. MEMBRANE TRAIN B IS CONTAINED IN SAME STRUCTURE AS TRAIN A AND FED THROUGH INFLUENT GATES AS SHOWN ON I601.

VICTOR VALLEY WASTEWATER RECLAMATION AUTHORITY
HESPERIA WRP - PRELIMINARY DESIGN REPORT

HDR

carollo

I604

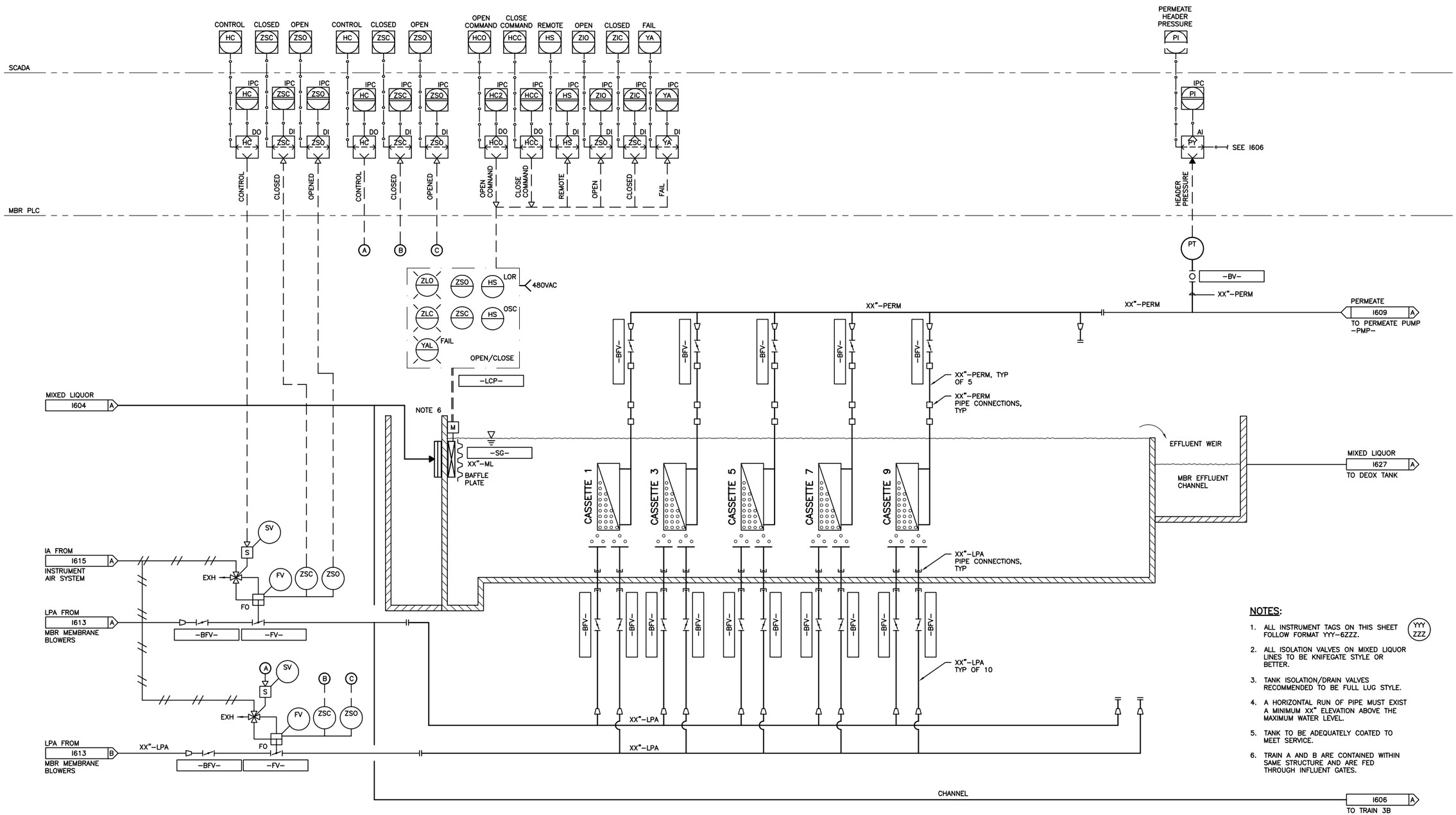

NOTES:

1. ALL INSTRUMENT TAGS ON THIS SHEET FOLLOW FORMAT YYY-6ZZZ. (YYY ZZZ)
2. ALL ISOLATION VALVES ON MIXED LIQUOR LINES TO BE KNIFEGATE STYLE OR BETTER.
3. TANK ISOLATION/DRAIN VALVES RECOMMENDED TO BE FULL LUG STYLE.
4. A HORIZONTAL RUN OF PIPE MUST EXIST A MINIMUM XX" ELEVATION ABOVE THE MAXIMUM WATER LEVEL.
5. TANK TO BE ADEQUATELY COATED TO MEET SERVICE.
6. TRAIN A AND B ARE CONTAINED WITHIN SAME STRUCTURE AND ARE FED THROUGH INFLUENT GATES.

VICTOR VALLEY WASTEWATER RECLAMATION AUTHORITY
HESPERIA WRP - PRELIMINARY DESIGN REPORT

HDR

carollo

I605

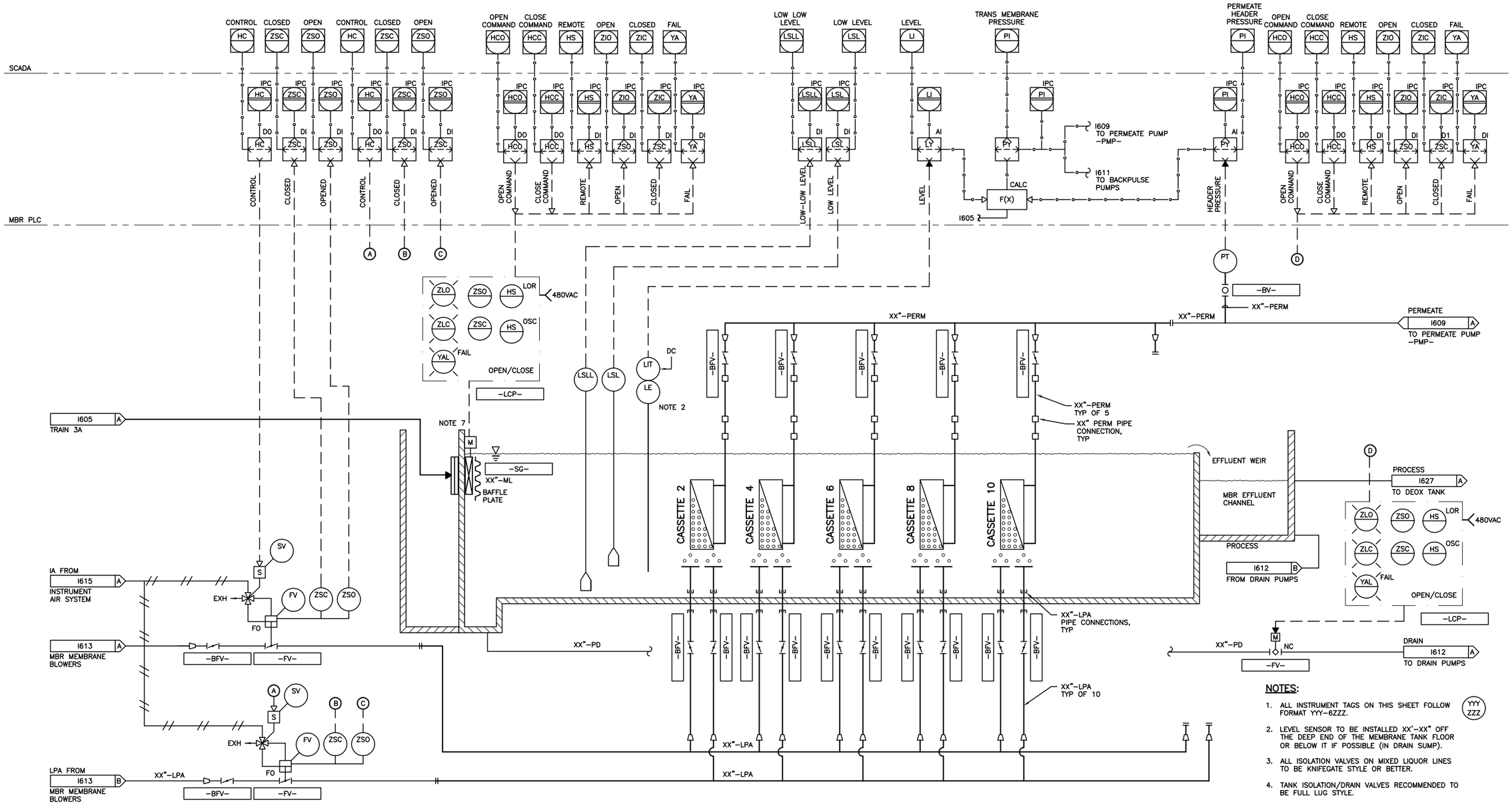

NOTES:

1. ALL INSTRUMENT TAGS ON THIS SHEET FOLLOW FORMAT YYY-6ZZZ.
2. LEVEL SENSOR TO BE INSTALLED XX'-XX" OFF THE DEEP END OF THE MEMBRANE TANK FLOOR OR BELOW IT IF POSSIBLE (IN DRAIN SUMP).
3. ALL ISOLATION VALVES ON MIXED LIQUOR LINES TO BE KNIFEGATE STYLE OR BETTER.
4. TANK ISOLATION/DRAIN VALVES RECOMMENDED TO BE FULL LUG STYLE.
5. A HORIZONTAL RUN OF PIPE MUST EXIST A MINIMUM XX" ELEVATION ABOVE THE MAXIMUM WATER LEVEL.
6. TANK TO BE ADEQUATELY COATED TO MEET SERVICE.
7. MEMBRANE TRAIN B IS CONTAINED IN SAME STRUCTURE AS TRAIN A AND FED THROUGH INFLUENT GATES AS SHOWN ON I601.

YYY ZZZ

VICTOR VALLEY WASTEWATER RECLAMATION AUTHORITY
HESPERIA WRP - PRELIMINARY DESIGN REPORT

HDR

carollo

I606

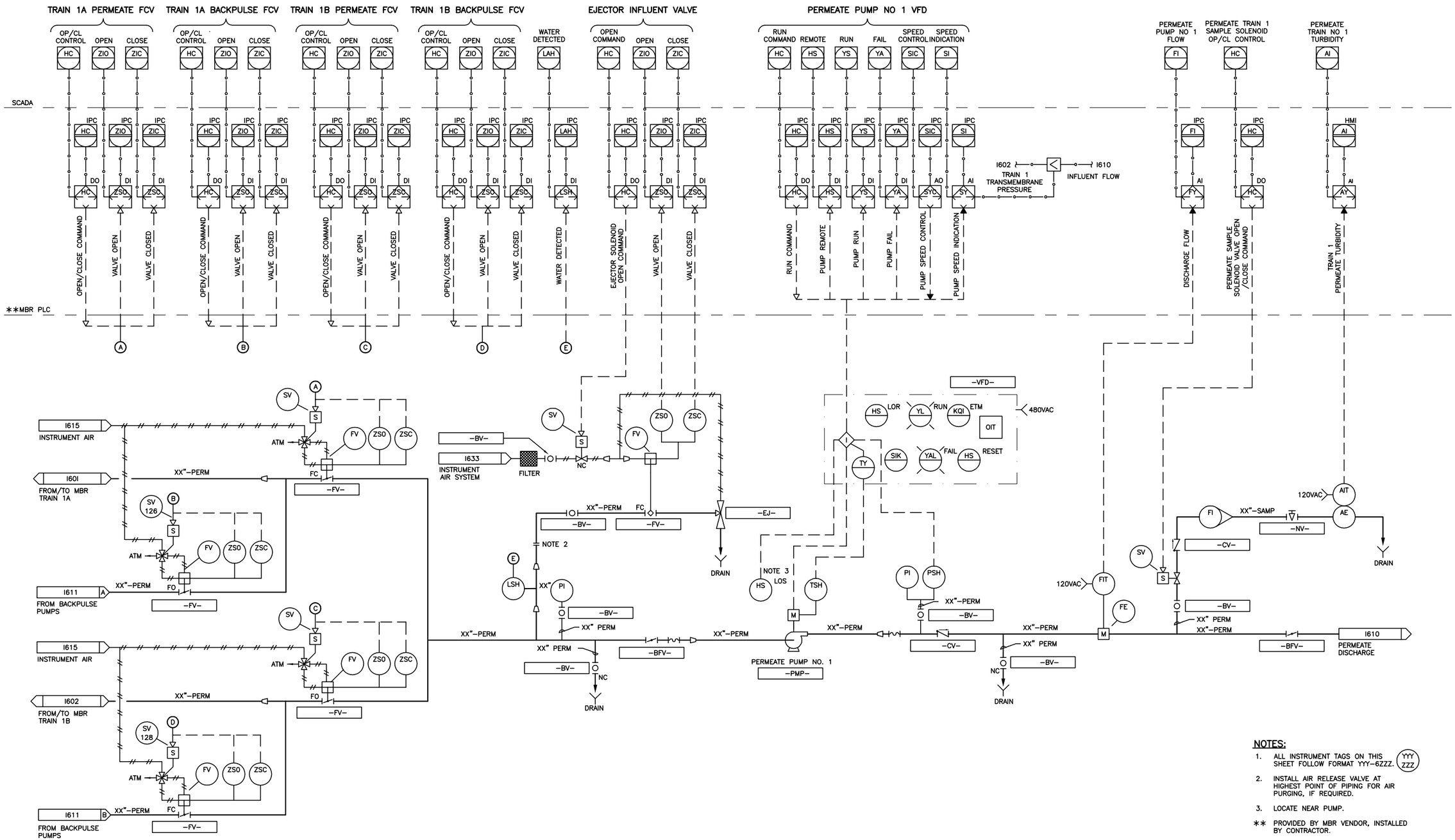

VICTOR VALLEY WASTEWATER RECLAMATION AUTHORITY
HESPERIA WRP - PRELIMINARY DESIGN REPORT

HDR

carollo

I607

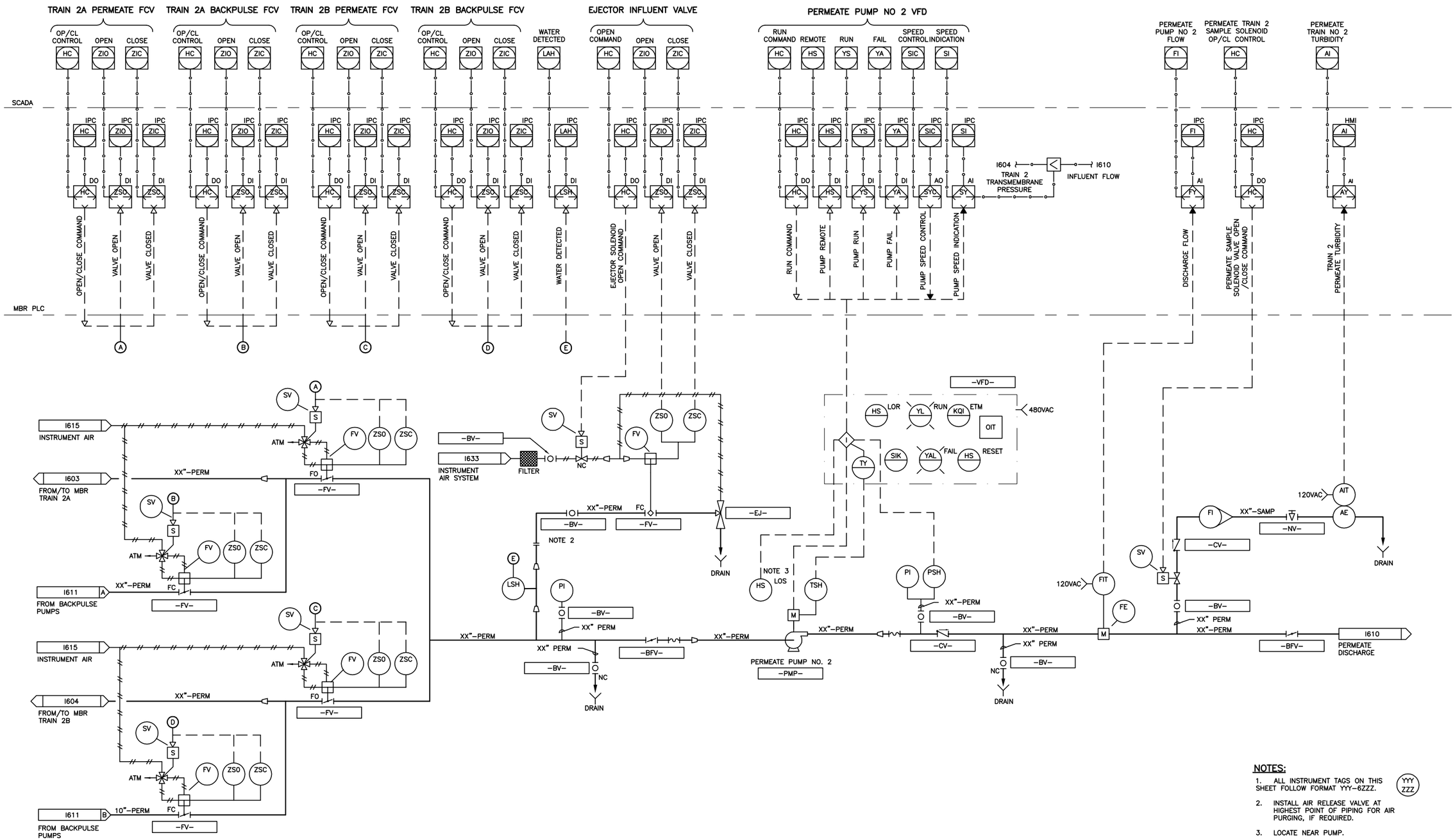

NOTES:

1. ALL INSTRUMENT TAGS ON THIS SHEET FOLLOW FORMAT YYY-6ZZZ.
2. INSTALL AIR RELEASE VALVE AT HIGHEST POINT OF PIPING FOR AIR PURGING, IF REQUIRED.
3. LOCATE NEAR PUMP.

VICTOR VALLEY WASTEWATER RECLAMATION AUTHORITY
HESPERIA WRP - PRELIMINARY DESIGN REPORT

HDR

carollo

I608

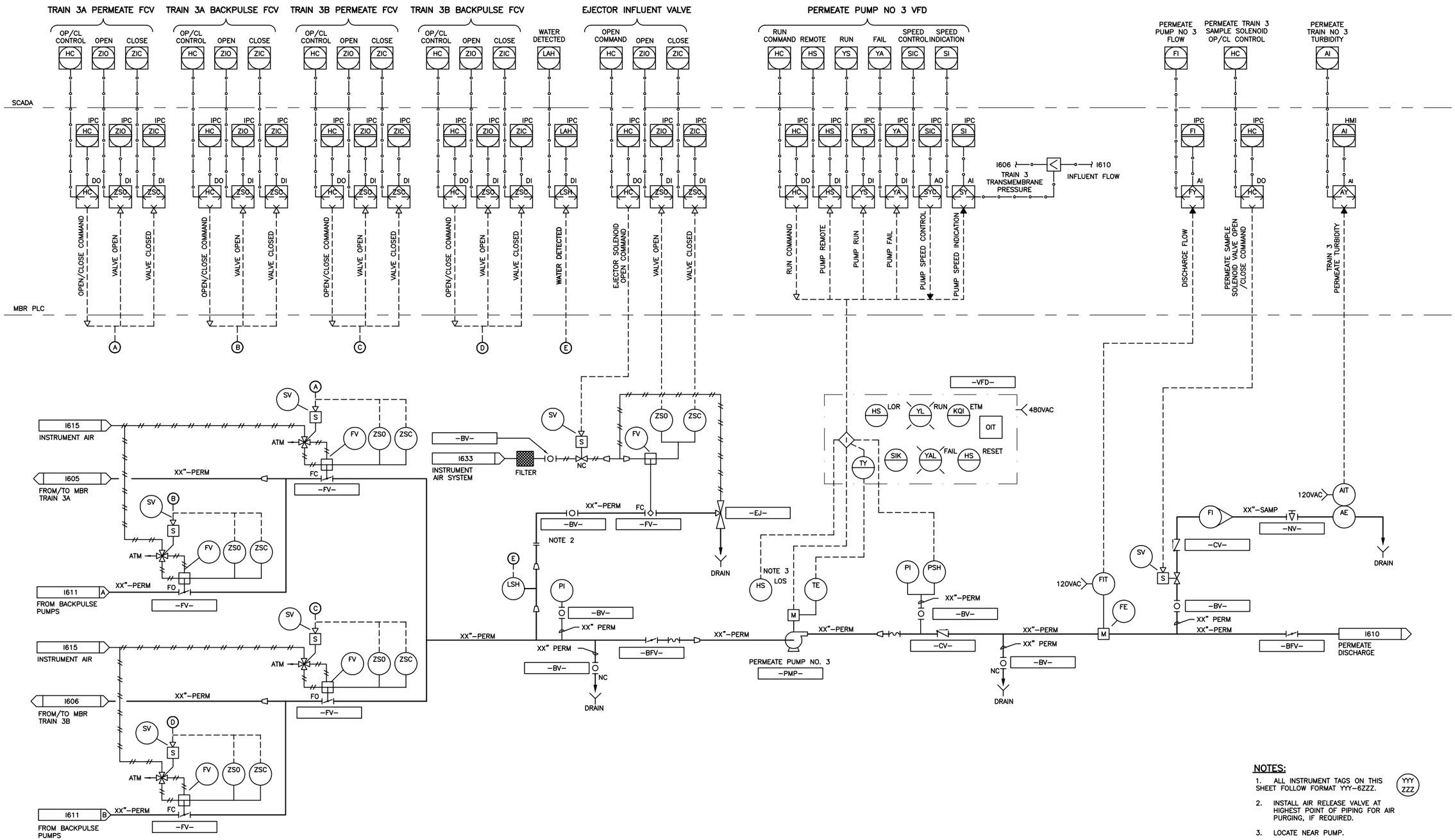

NOTES:

1. ALL INSTRUMENT TAGS ON THIS SHEET FOLLOW FORMAT YYY-6ZZZ.
2. INSTALL AIR RELEASE VALVE AT HIGHEST POINT OF PIPING FOR AIR PURGING, IF REQUIRED.
3. LOCATE NEAR PUMP.

VICTOR VALLEY WASTEWATER RECLAMATION AUTHORITY
HESPERIA WRP - PRELIMINARY DESIGN REPORT

HDR

carollo

I609

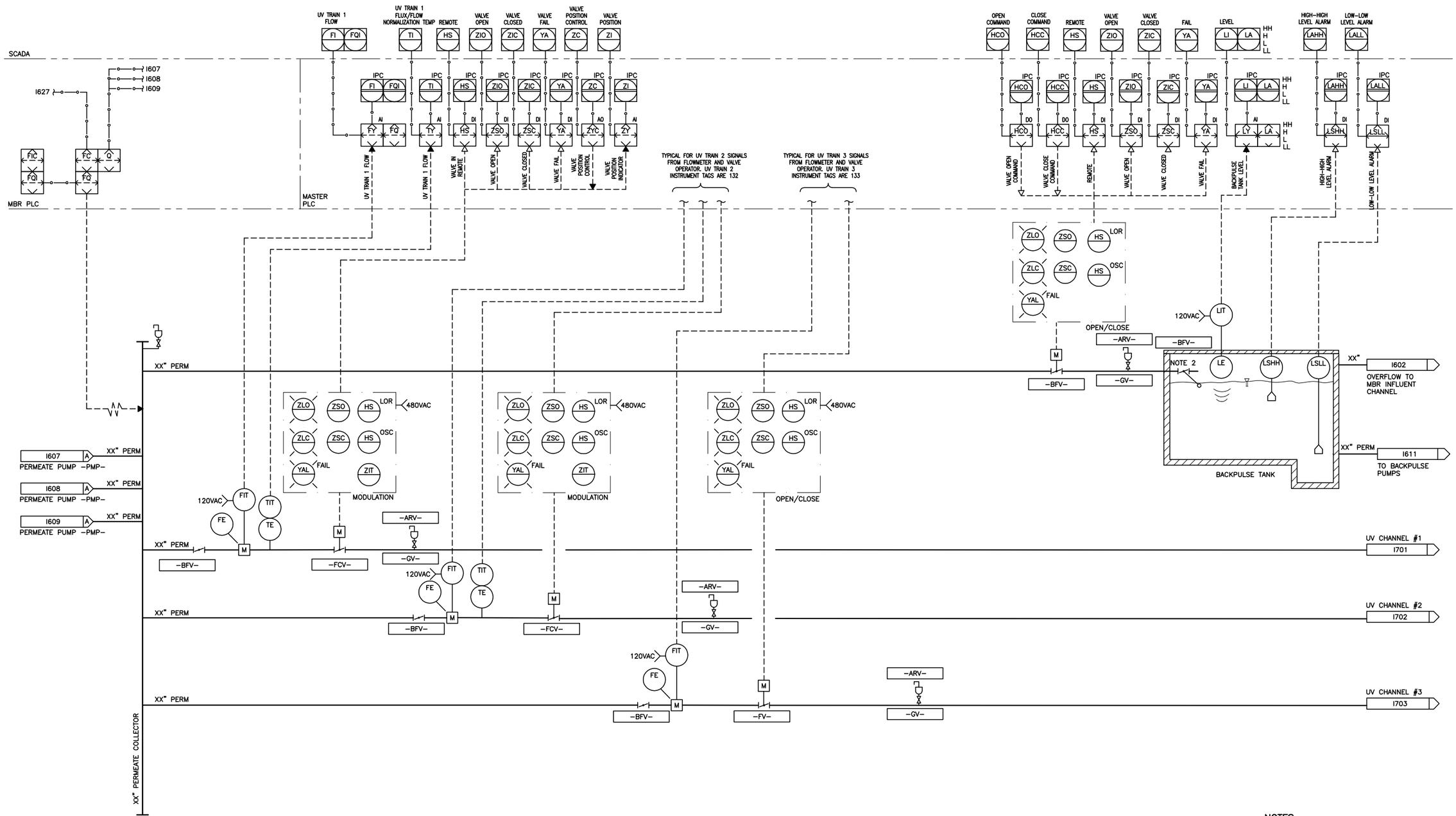

NOTES:

1. ALL INSTRUMENT TAGS ON THIS SHEET FOLLOW FORMAT YYY-6ZZZ. (YYY ZZZ)
2. BFV WITH MECHANICAL FLOAT SWITCH.

VICTOR VALLEY WASTEWATER RECLAMATION AUTHORITY
HESPERIA WRP - PRELIMINARY DESIGN REPORT

HDR

carollo

I610

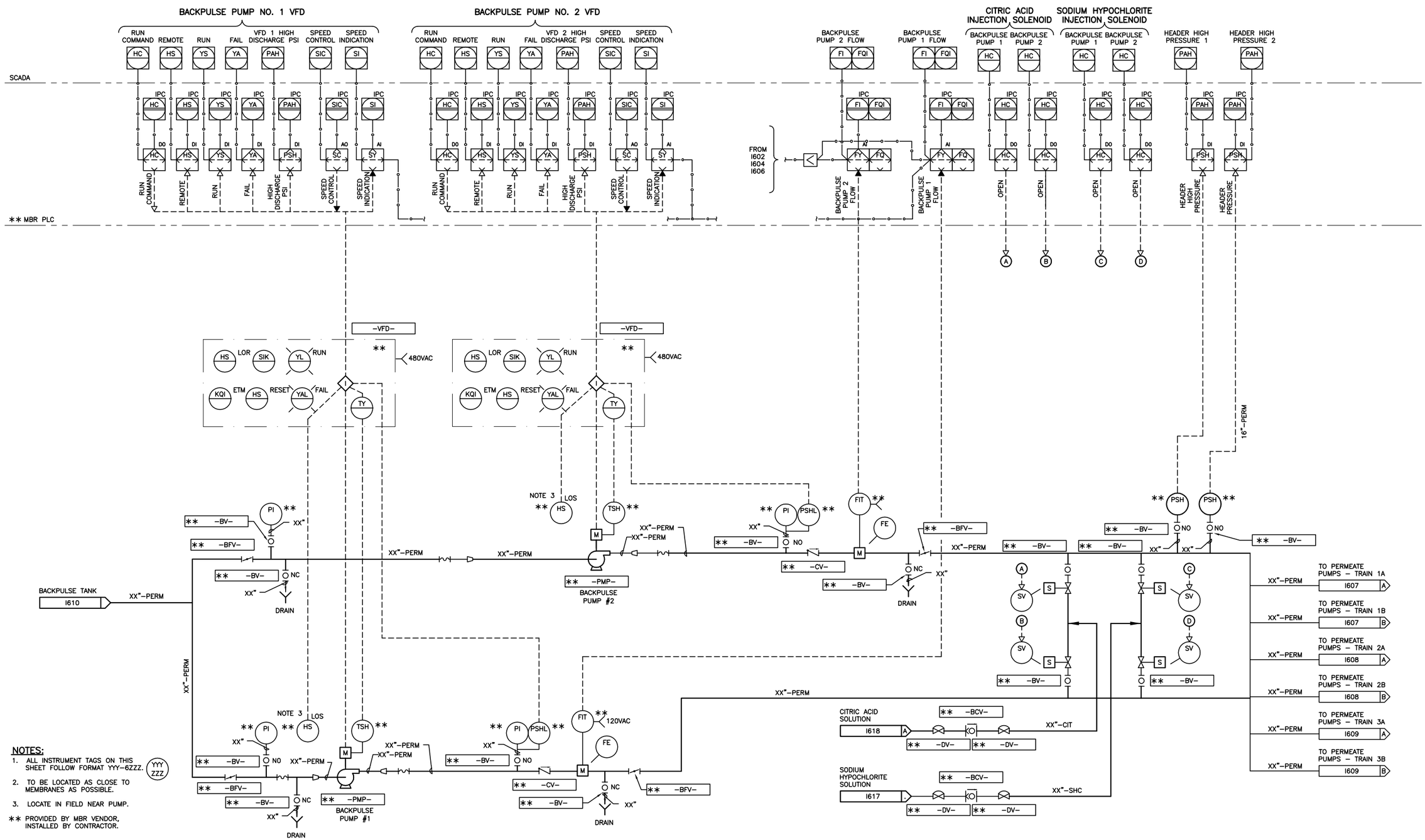

NOTES:

1. ALL INSTRUMENT TAGS ON THIS SHEET FOLLOW FORMAT YYY-6ZZZ. (YYY ZZZ)
2. TO BE LOCATED AS CLOSE TO MEMBRANES AS POSSIBLE.
3. LOCATE IN FIELD NEAR PUMP.

** PROVIDED BY MBR VENDOR, INSTALLED BY CONTRACTOR.

VICTOR VALLEY WASTEWATER RECLAMATION AUTHORITY
HESPERIA WRP - PRELIMINARY DESIGN REPORT

HDR

carollo

I611

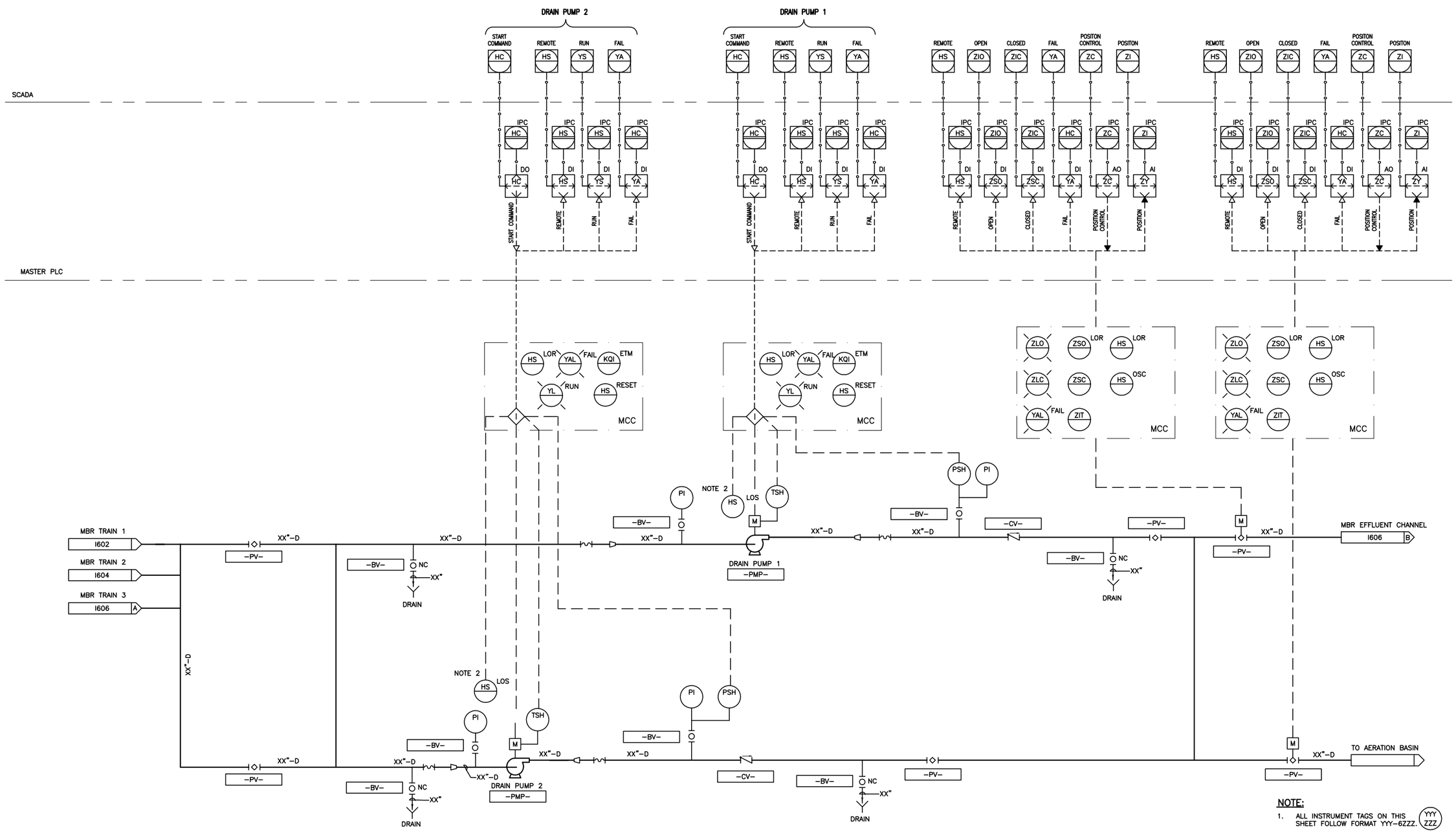

VICTOR VALLEY WASTEWATER RECLAMATION AUTHORITY
HESPERIA WRP - PRELIMINARY DESIGN REPORT

HDR

carollo

I612

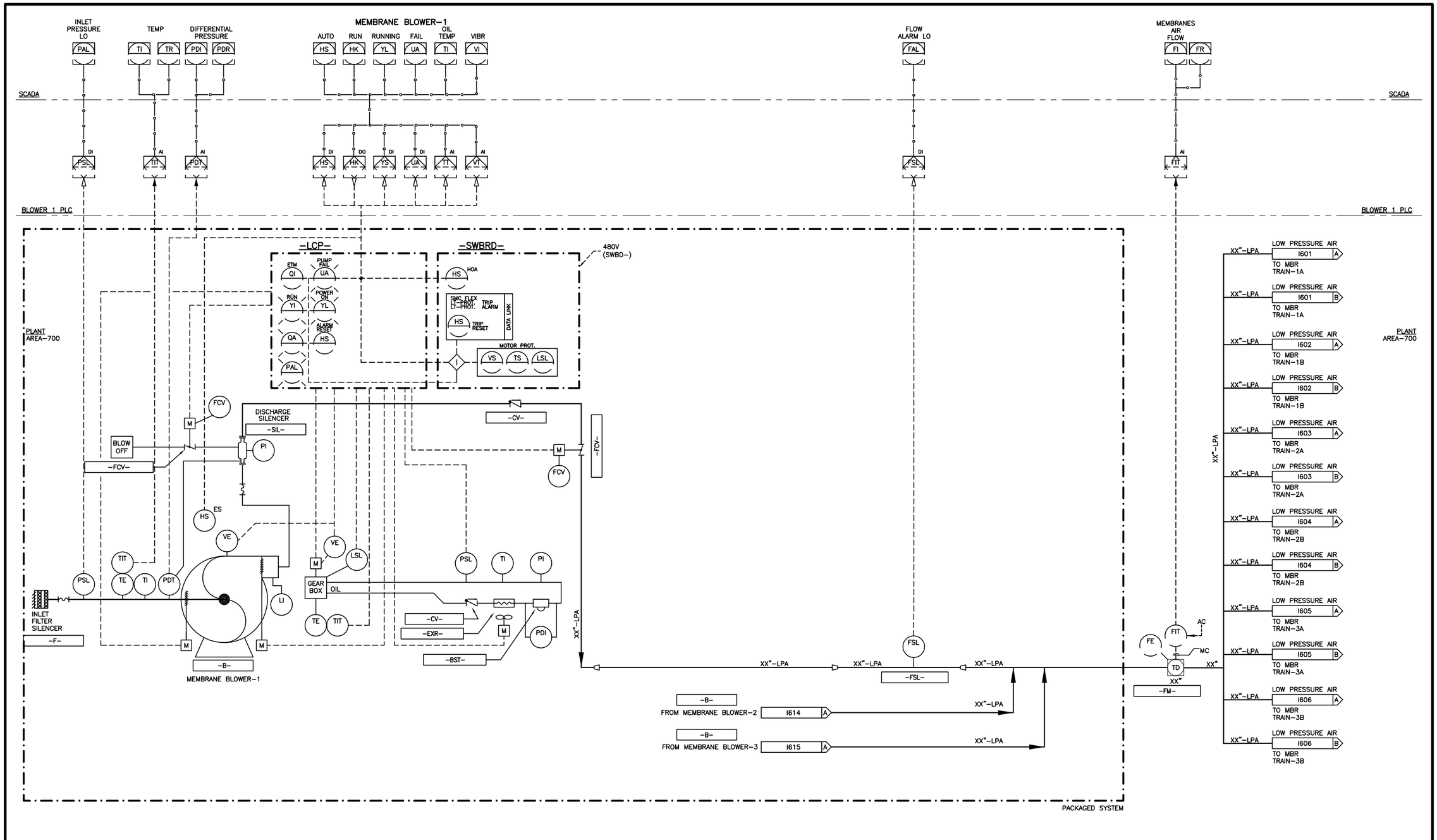

VICTOR VALLEY WASTEWATER RECLAMATION AUTHORITY
HESPERIA WRP - PRELIMINARY DESIGN REPORT

HDR

carollo

I613

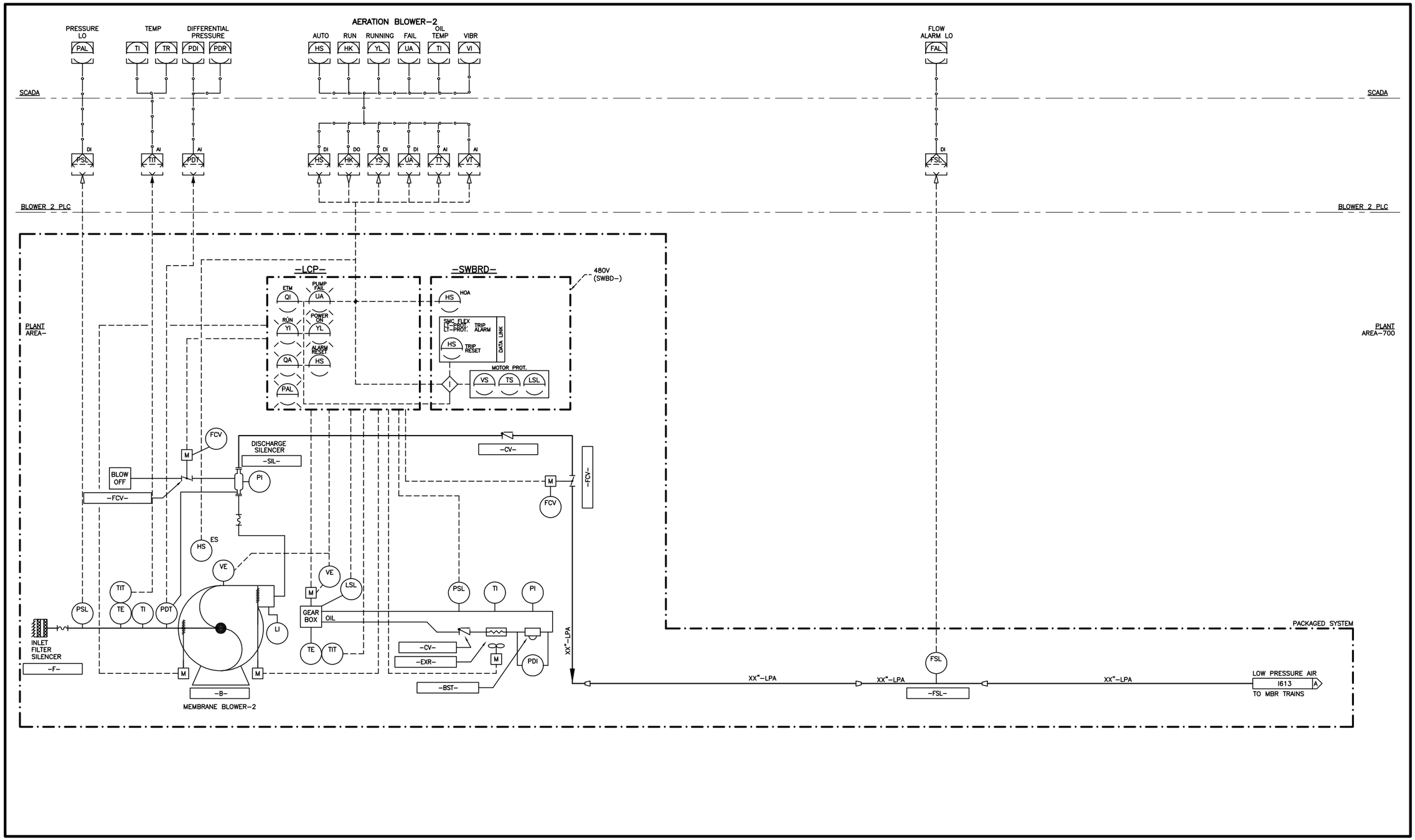

VICTOR VALLEY WASTEWATER RECLAMATION AUTHORITY
HESPERIA WRP - PRELIMINARY DESIGN REPORT

HDR

carollo

I614

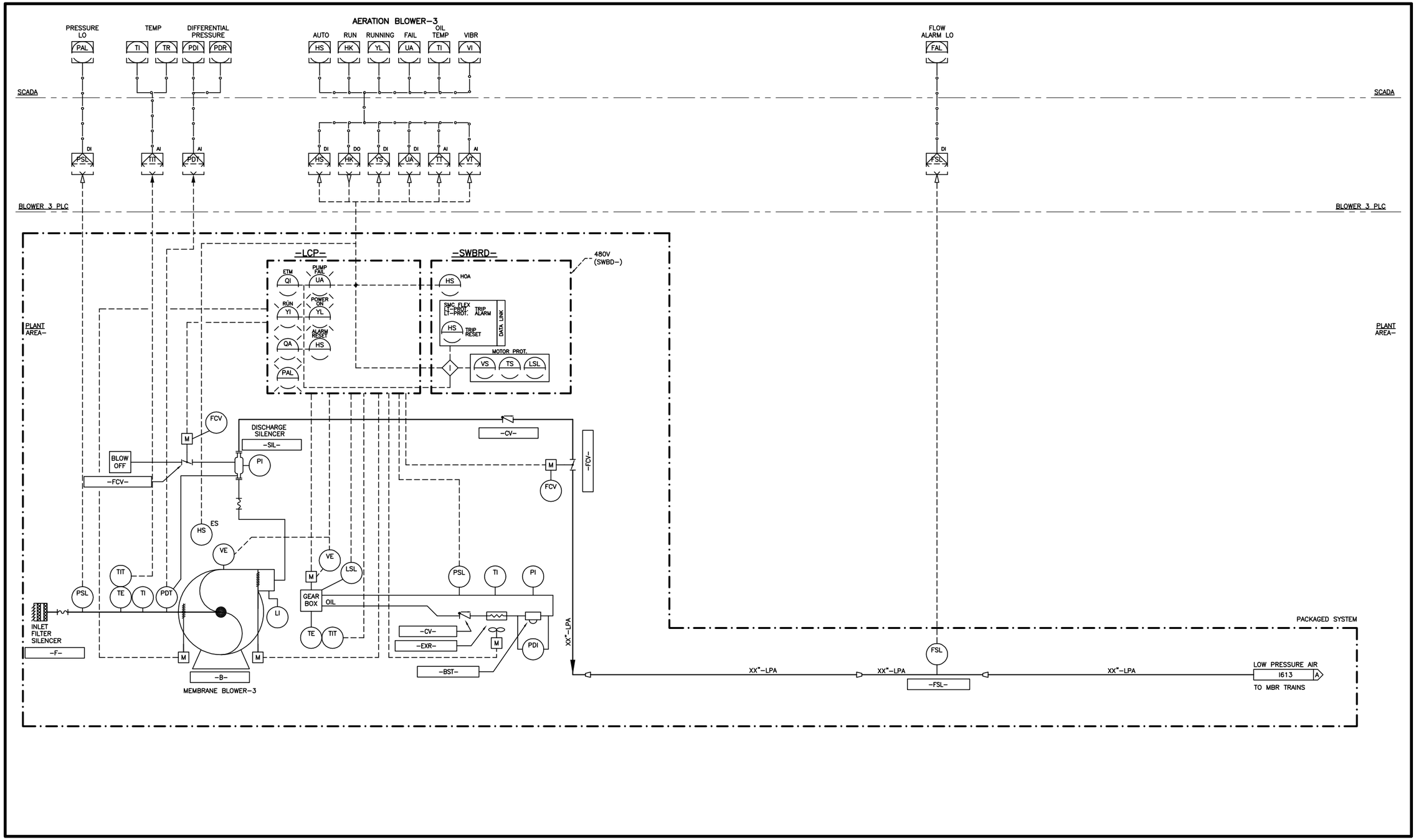

VICTOR VALLEY WASTEWATER RECLAMATION AUTHORITY
HESPERIA WRP - PRELIMINARY DESIGN REPORT

HDR

carollo

I615

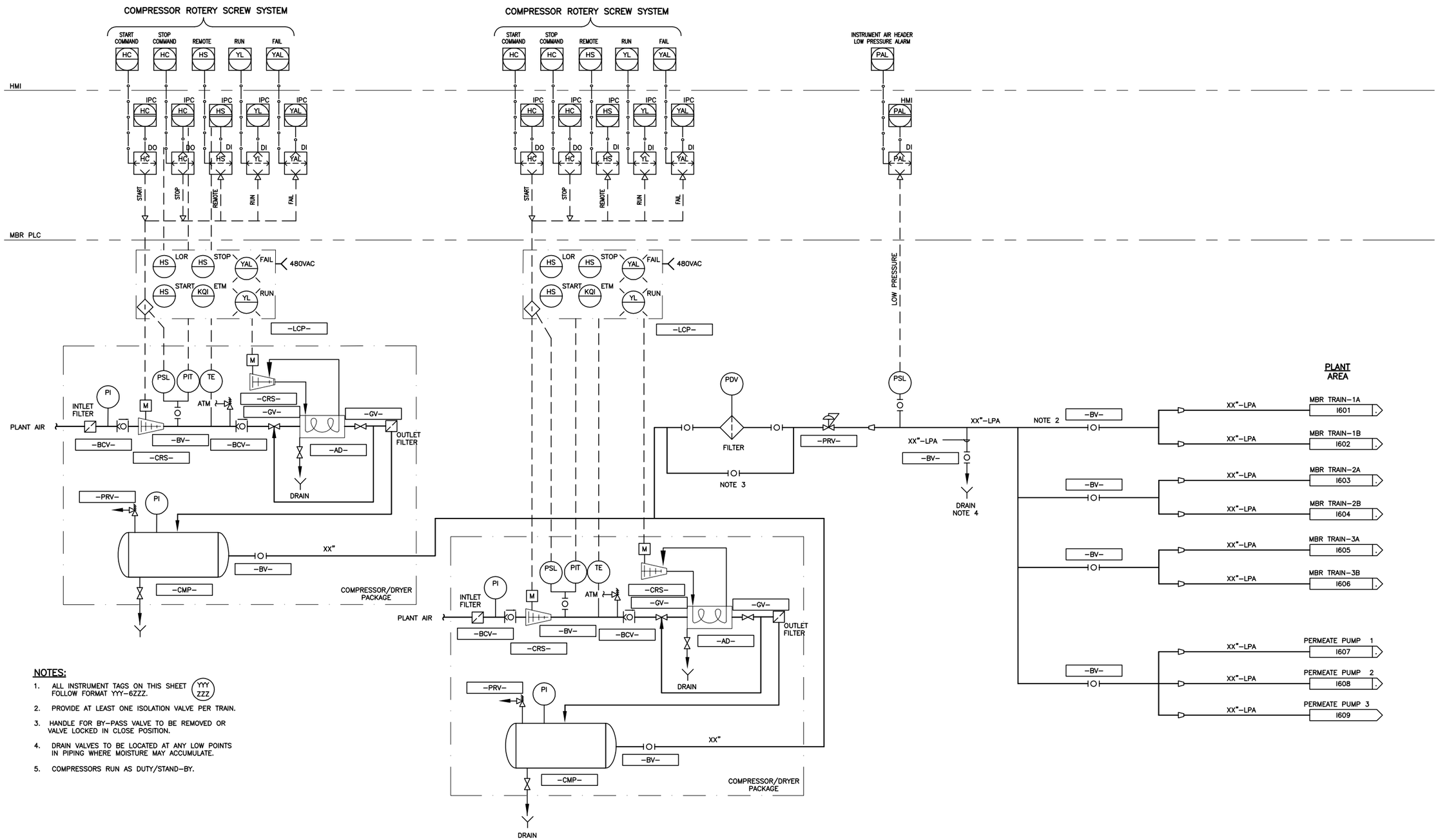

NOTES:

1. ALL INSTRUMENT TAGS ON THIS SHEET FOLLOW FORMAT YYY-6ZZZ. (YYY ZZZ)
2. PROVIDE AT LEAST ONE ISOLATION VALVE PER TRAIN.
3. HANDLE FOR BY-PASS VALVE TO BE REMOVED OR VALVE LOCKED IN CLOSE POSITION.
4. DRAIN VALVES TO BE LOCATED AT ANY LOW POINTS IN PIPING WHERE MOISTURE MAY ACCUMULATE.
5. COMPRESSORS RUN AS DUTY/STAND-BY.

VICTOR VALLEY WASTEWATER RECLAMATION AUTHORITY
HESPERIA WRP - PRELIMINARY DESIGN REPORT

HDR

carollo

I616

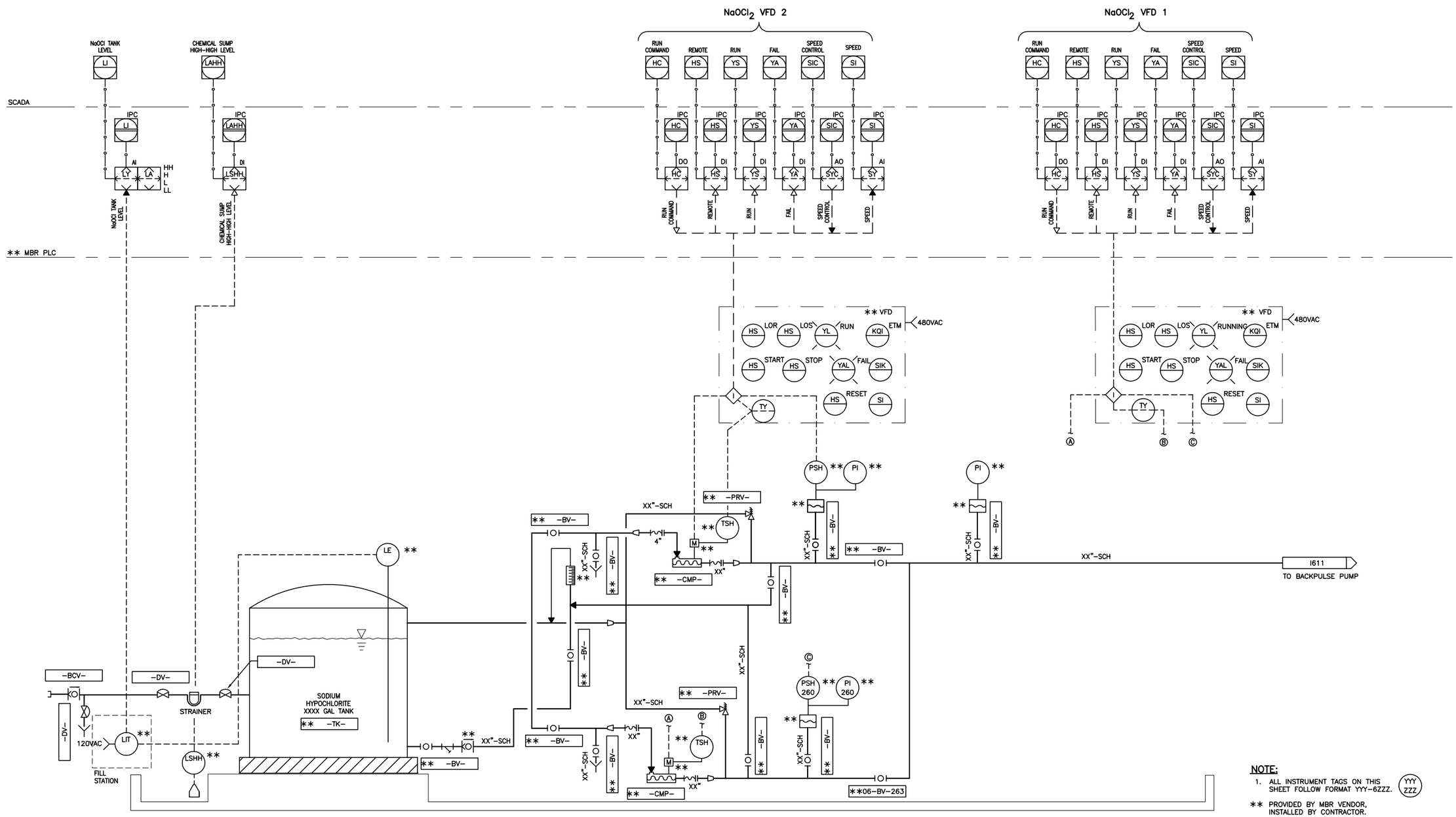

VICTOR VALLEY WASTEWATER RECLAMATION AUTHORITY
HESPERIA WRP - PRELIMINARY DESIGN REPORT

carollo HDR

I617

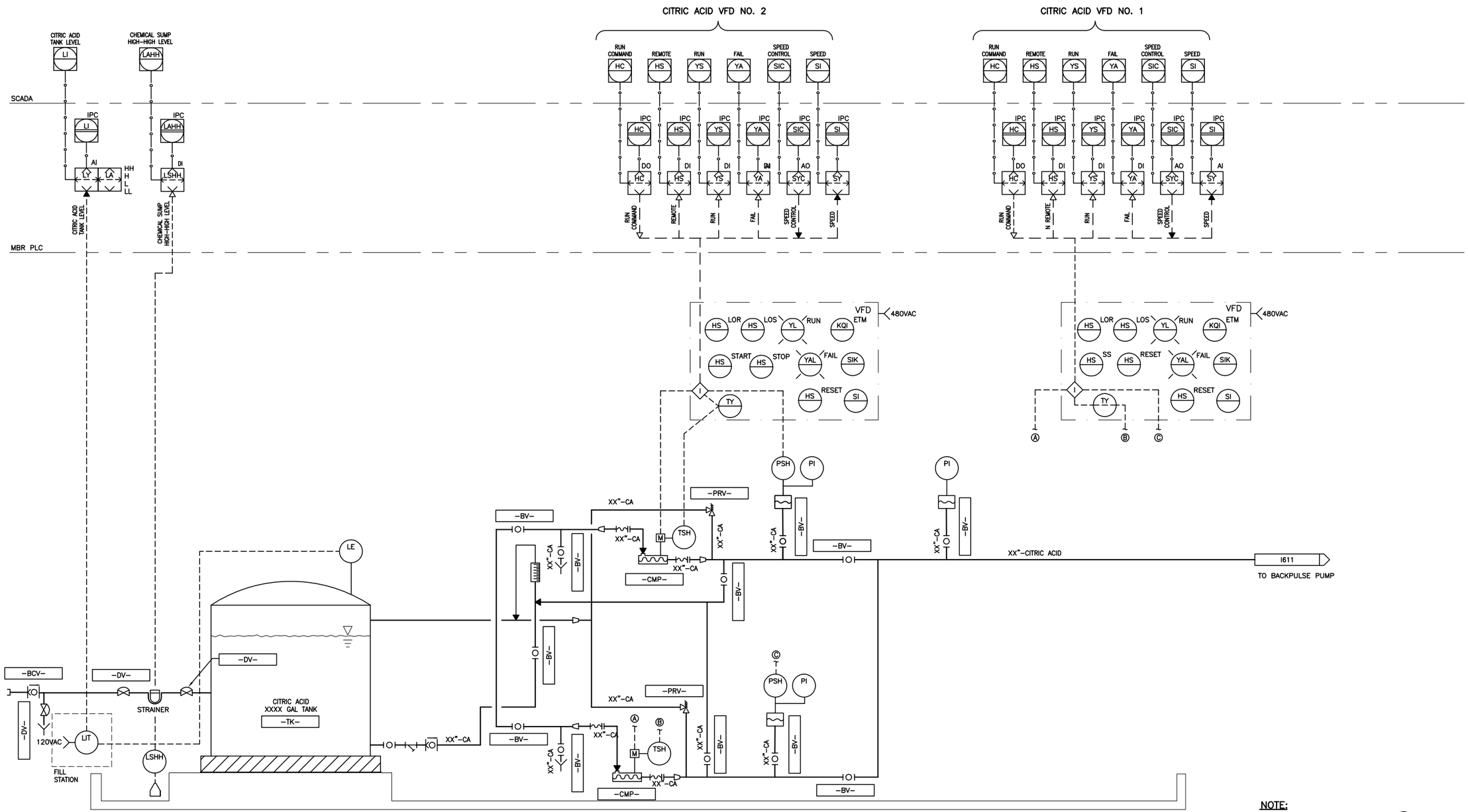

VICTOR VALLEY WASTEWATER RECLAMATION AUTHORITY
HESPERIA WRP - PRELIMINARY DESIGN REPORT

HDR

carollo

I618

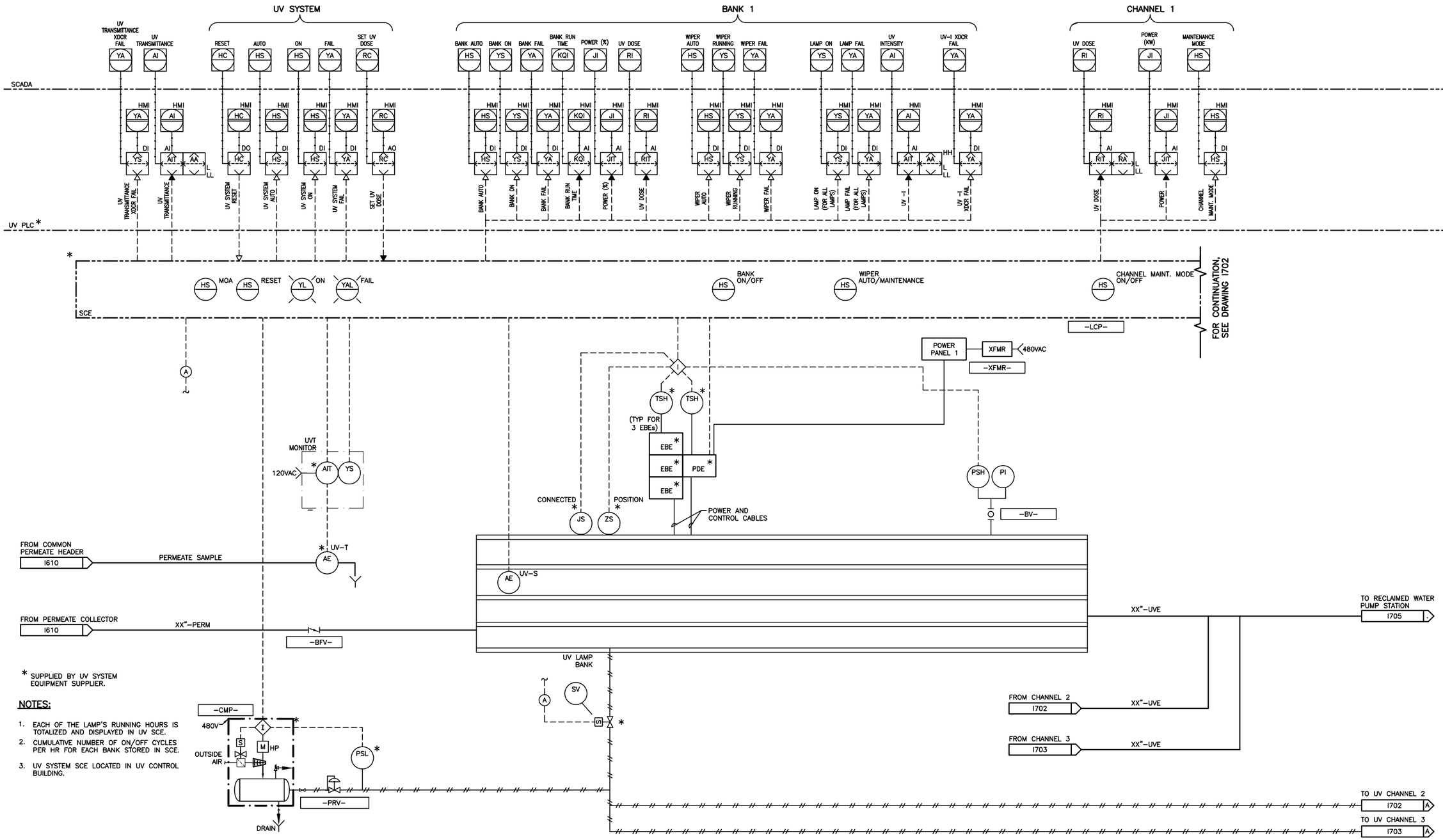

VICTOR VALLEY WASTEWATER RECLAMATION AUTHORITY
HESPERIA WRP - PRELIMINARY DESIGN REPORT

HDR

carollo

I701

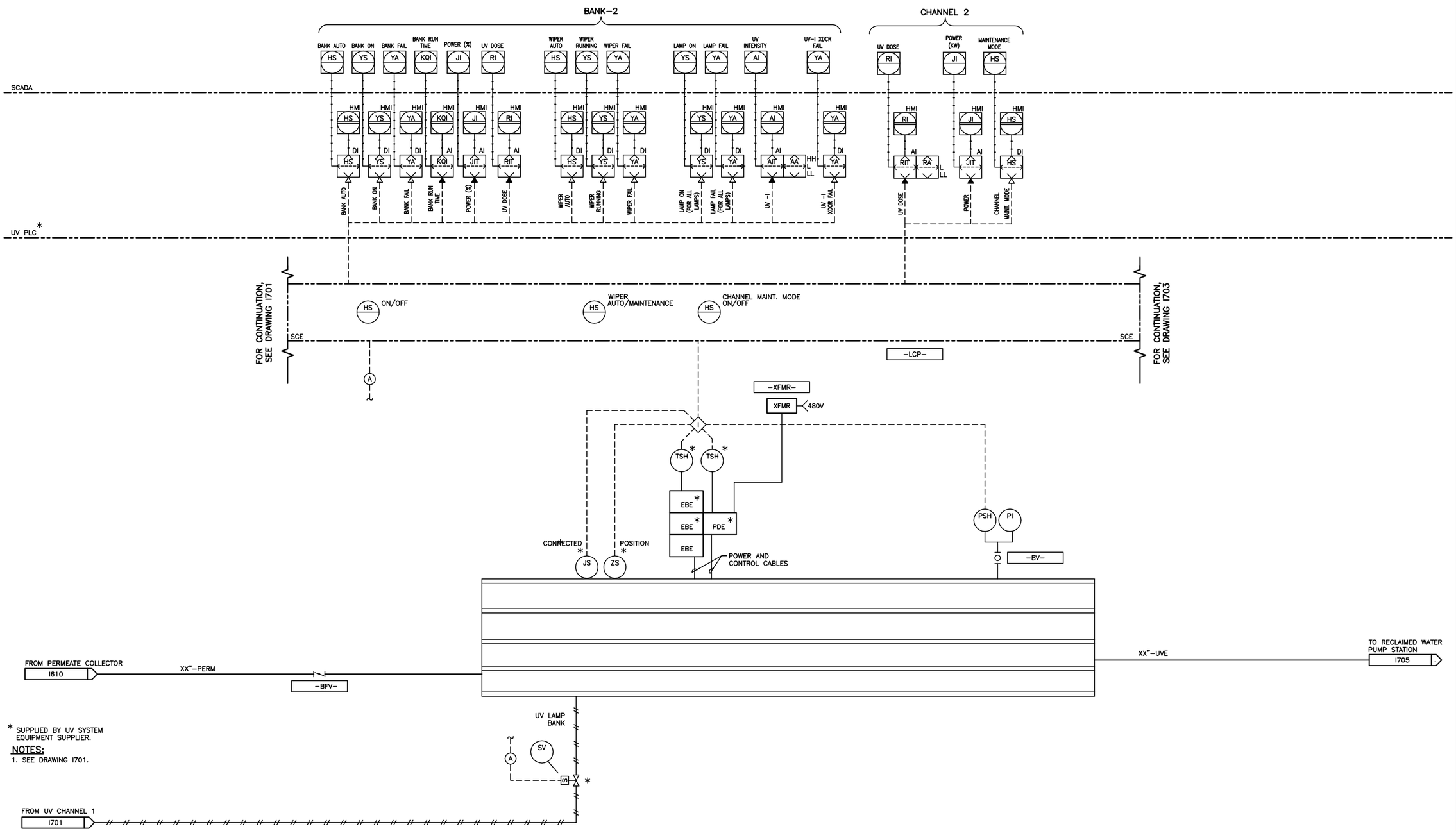

* SUPPLIED BY UV SYSTEM EQUIPMENT SUPPLIER.

NOTES:

1. SEE DRAWING I701.

VICTOR VALLEY WASTEWATER RECLAMATION AUTHORITY
HESPERIA WRP - PRELIMINARY DESIGN REPORT

HDR

carollo

I702

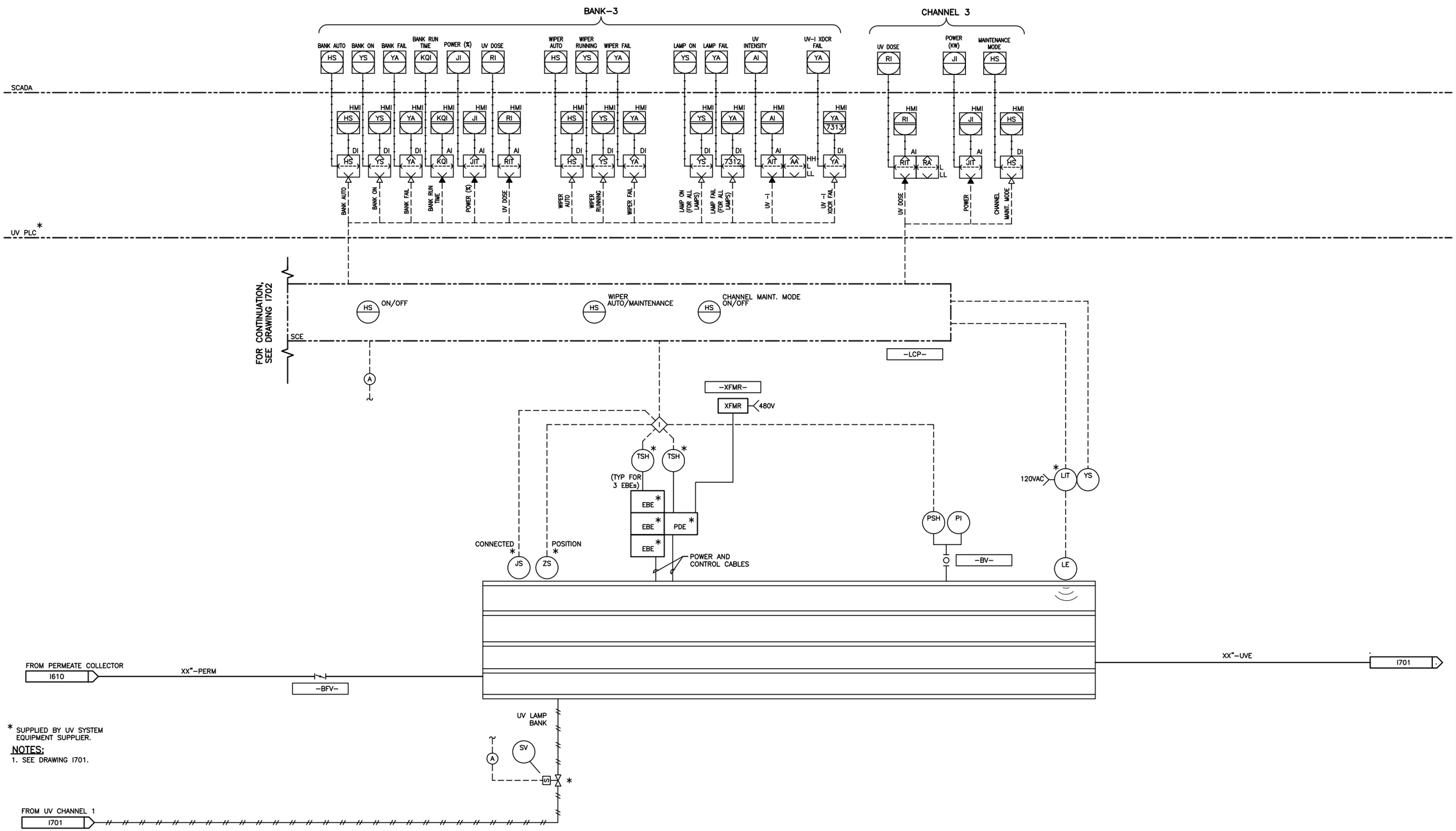

* SUPPLIED BY UV SYSTEM EQUIPMENT SUPPLIER.

NOTES:

1. SEE DRAWING I701.

VICTOR VALLEY WASTEWATER RECLAMATION AUTHORITY
HESPERIA WRP - PRELIMINARY DESIGN REPORT

HDR

carollo

I703

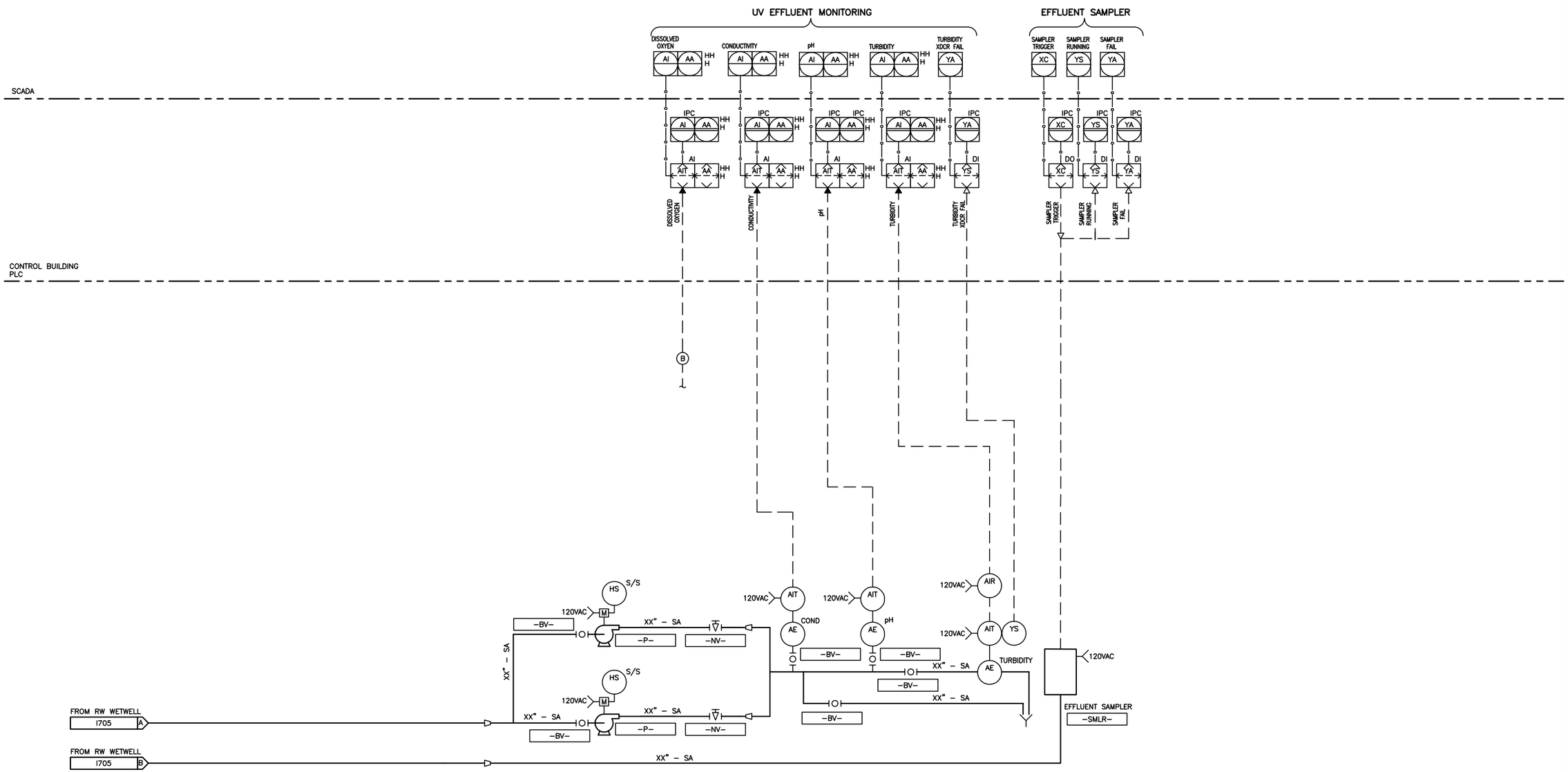

VICTOR VALLEY WASTEWATER RECLAMATION AUTHORITY
HESPERIA WRP - PRELIMINARY DESIGN REPORT

HDR

carollo

I704

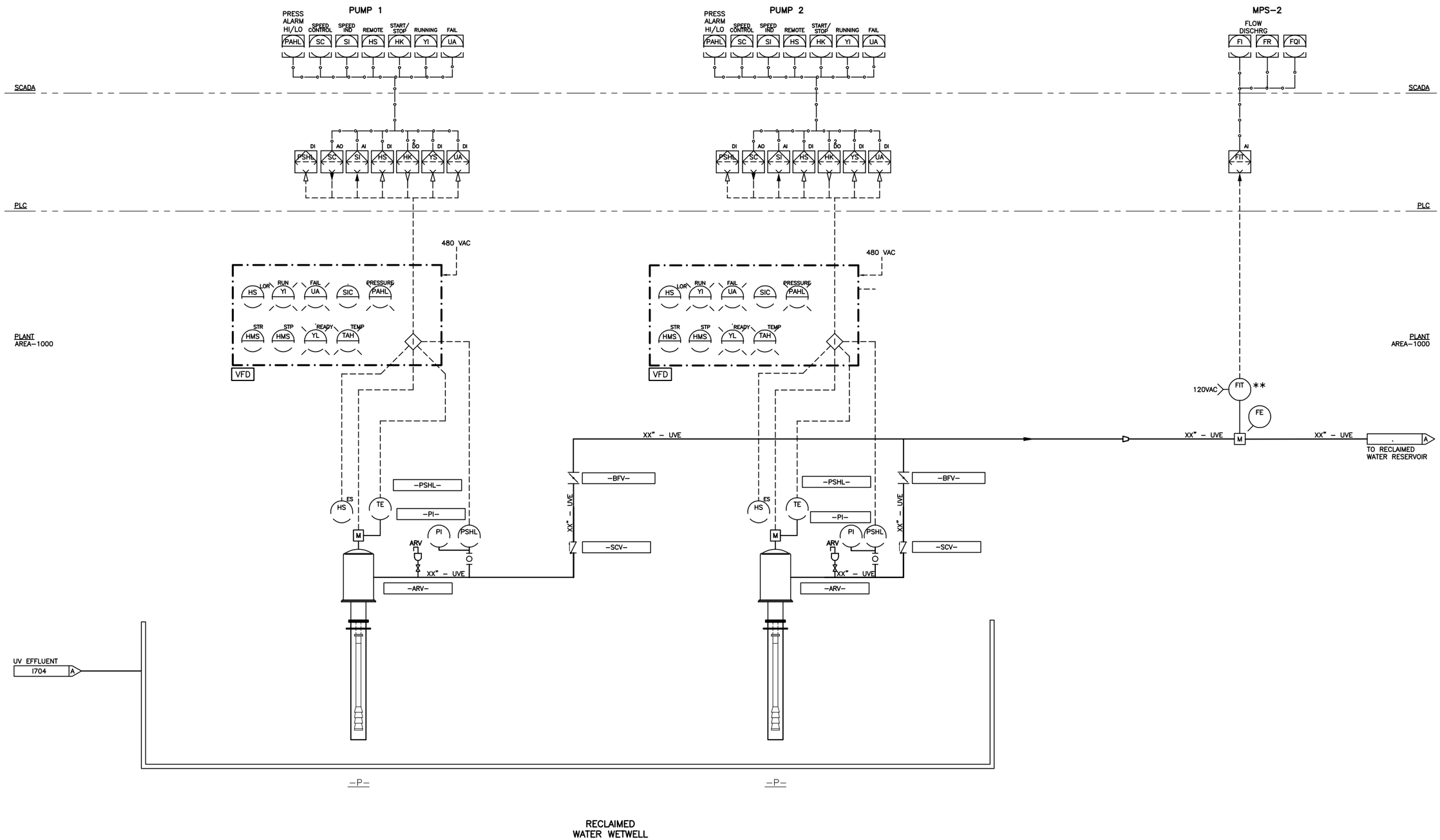

VICTOR VALLEY WASTEWATER RECLAMATION AUTHORITY
HESPERIA WRP - PRELIMINARY DESIGN REPORT

HDR

carollo

I705

DESIGN INFORMATION MEMORANDUM NO. 13A

SITE LAYOUT AND CONSTRAINTS

Project Name:	Hesperia and Apple Valley Scalping WRPs, Raw Sewage Lift Station and Force Mains		
Client:	Victor Valley Wastewater Reclamation Authority	**Date:**	December 2009

INTRODUCTION

This DIM-13A discussed the selected Hesperia WRP site location and physical constraints at this location such as geotechnical and seismic constraints.

Site Layout

The Hesperia WRP will be located on the north side of Mojave Street, just west of Tamarisk Avenue, as shown in Figure 13A.1.

The WRP site layout has been developed with the following goals:

- Low profile;
- A monolithic or uniform structure concept to reduce footprint; and
- Common wall construction to reduce costs.

The proposed site layout is presented in Figure 13A.1. Sections of the proposed WRP are presented in Figure 13A.2 and Figure 13A.3.

Site Constraints

Seismicity and Geologic Hazards

An initial review of readily available geological maps suggests that there are no known active faults underlying the project sites. The San Andreas Fault is approximately 12 miles southeast of Hesperia. Other faults such as the Helendale, North Frontal, and Mirage Valley are significantly closer; but may be dormant and pose a smaller risk. Whatever distant fault sources are identified in the final geotechnical report, it is clear that the subject sites for this project are in seismically active areas for which strong ground motions must be considered. Based on available geotechnical borings that were placed for a prior project near the Apple Valley WRP site (Apple Valley was referenced due to the fact that at the time of developing the PDR, no Hesperia geotechnical report is available), the final geotechnical report for Hesperia WRP site will likely confirm that soils in that area are in Seismic Class C or D, and design ground accelerations will be on the order of 0.30 g. Soils in this category should allow the use of conventional concrete wall, column, and mat foundations. Since the soils are predominantly sands, gravel, and weak caliche, it is also suspected that seismic liquefaction, expansive soils, and soil corrosivity will not be major design considerations; but all such factors must be detailed for both sites by the geotechnical consultant.

Design Codes

Seismic and other design loads for the Project will be as specified in the 2007 California Building Code (CBC), which is based on the 2006 International Building Code (IBC). These industry standards also rely extensively on “Minimum Design Loads for Buildings and Other Structures” in American Society of Civil Engineers (ASCE) 7-05. Exceptions (to IBC & ASCE) outlined in the CBC, and in specifications by local municipalities or other jurisdictions, will also be researched and implemented.

Structural Systems

Available model extractions suggest that concrete foundation walls for basins will extend approximately 20 feet deep and will be 16 to 20 inches thick. The foundation mat beneath the walls will be approximately 18 to 22 inches thick. Walkway slabs will be 12 inches thick and span over the basins near ground level. Foundation walls for enclosed pump buildings will extend approximately 20 feet below ground and will be 12 to 16 inches thick. The first floor slab (near ground level) will be 12 inches thick, ribbed with concrete beams, which in turn are supported by the perimeter foundation walls.

Perimeter bearing walls above the first floor will be 12 inches thick, reinforced masonry. At least one interior CMU wall on the first floor would be required to transmit roof lateral loads (wind and seismic) to the first floor slab diaphragm.

The roofs for enclosed buildings will be supported by steel beams approximately 10 feet apart, sloping between the masonry bearing walls. The roof deck will be 3-inch deep corrugated steel spanning 10 feet between support beams. The exposed roof surface will be standing seam metal deck, supported by the 3-inch deck underlayment. Rigid insulation will be sandwiched between both decks.

Topography

The selected WRP site is adjacent to a wash and will require additional research into the floodway and floodplain elevations to determine top of concrete required for the water-bearing structures and other site facilities. The local flood control agency will be contacted and FEMA maps will be obtained. The site is generally sloped from the south/southwest to the north/northeast along the wash. The south portion of the site is at an elevation of approximately 3,340 feet above mean sea level (amsl) with the north end of the proposed WRP footprint at approximately 3,335 feet amsl. The change in grade across the site is not anticipated to create any additional site and or excavation requirements. A detailed topographic survey will be conducted upon final approval of the WRP site location from VVWRA and the City of Hesperia.

Noise Control

Noise attenuation needs to consider the three elements of noise: source, transmission path, and noise receiver. The impact of background noise, including existing environmental, transportation, and community noise sources in the absence of any audible construction activities must also be considered. For the Hesperia WRP, noise reduction will be accomplished by reduction at the source to practical limits.

Noise reduction at the source is dependent on the type of unit process or equipment in question. For typical equipment at wastewater treatment facilities, several options are available. The most effective solution is to enclose the equipment in some type of building or other enclosure. Sound attenuation panels can be provided on walls and/or ceilings of buildings or structures. For extremely high noise generating equipment or equipment located outside buildings or enclosures, manufactured noise suppression appurtenances can also be provided.

Considering public acceptance, a number of measures will be taken to provide noise attenuation for the Hesperia WRP. The proposed noise control features for the major process equipment are listed below:

- Pumps: Pumps at the Hesperia WRP include submersible pumps and motors (i.e., MBR feed forward pumps, WAS pumps) located in below-grade wet-well, dry-pit pumps (i.e., membrane permeate pumps) housed in building basement, and exposed pumps (effluent vertical turbine pumps) with motors at grade level. Noise attenuation will be accomplished by providing motor shrouds and/or increased level of motor insulation. For exposed pumps, some type of sound attenuation wall may be constructed if necessary.
- Mixers and Drives: Mixers and drives (i.e., on top of aeration basins, etc.) can also be provided with motor shrouds and/or increased level of motor insulation.
- Blowers: Blowers at the Hesperia WRP will be enclosed in building basement, with interior acoustical treatment on walls and ceiling. If necessary, each blower can be provided with individual enclosure to reduce noise level within the building.

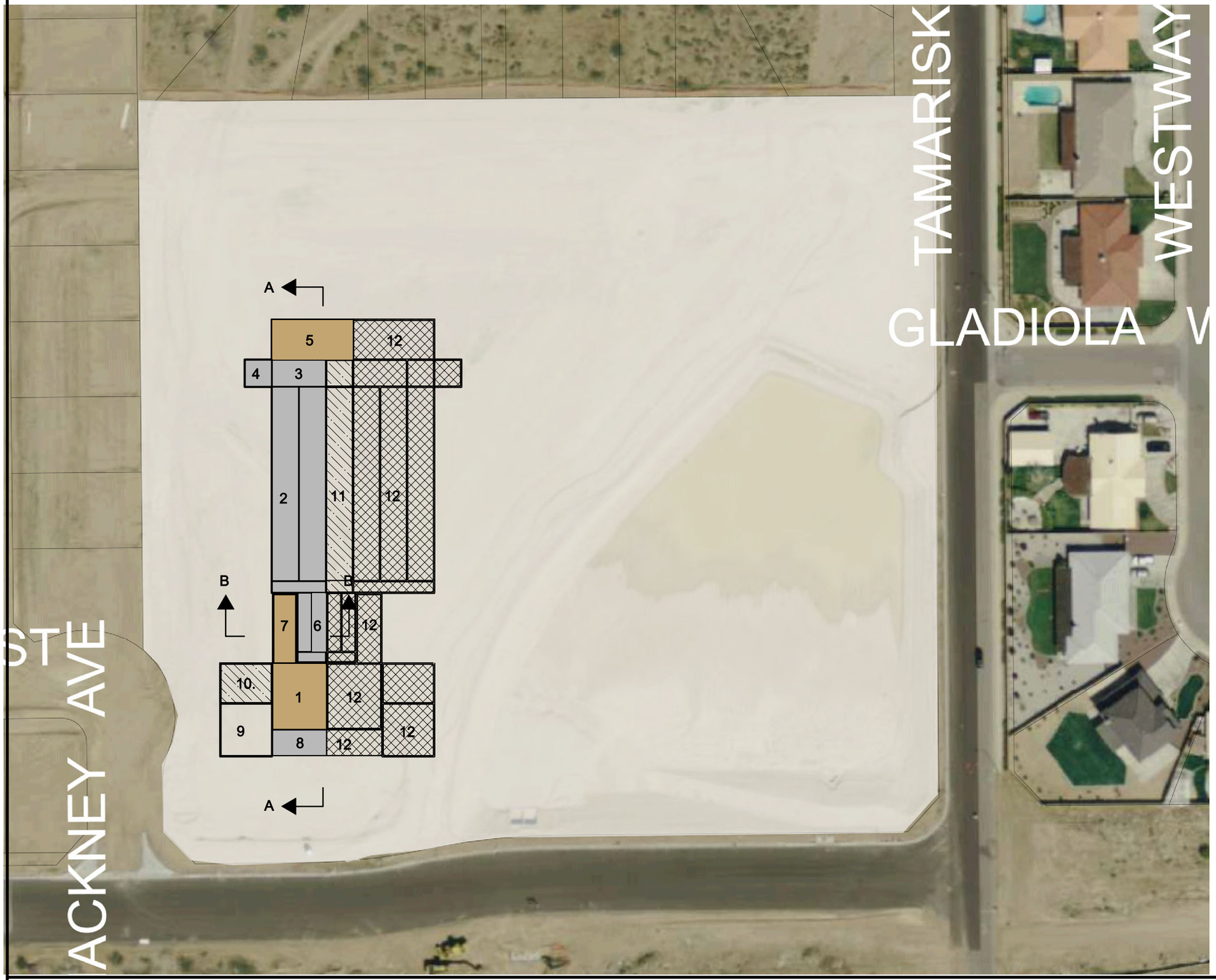

LEGEND

1. HEADWORKS/ MBR FACILITY BUILDING.
   FLOOR LEVEL: INFLUENT SCREENS, CITRIC ACID/ SODIUM HYPO STORAGE & FEED.
   LOWER LEVEL: UV SYSTEM & PERMEATE PUMPS
2. BIOLOGICAL BASIN
3. FEED FORWARD PUMP STATION
4. WAS PUMP STATION
5. PROCESS ELECTRICAL/ BLOWER BUILDING
6. SUBMERGED MEMBRANES
7. MBR ELECTRICAL/ BLOWER BUILDING
   FLOOR LEVEL: ELECTRICAL ROOM
   LOWER LEVEL: MEMBRANE AIR SCOUR BLOWERS
8. RECLAIMED WATER PUMP STATION
9. BIOFILTER (HEADWORKS ODOR CONTROL)
10. GRIT REMOVAL (FUTURE)
11. AERATION BASIN PHASE 2 EXPANSION (2 MGD)
12. PHASE 3 EXPANSION (4 MGD)

NORTH

VICTOR VALLEY WASTEWATER RECLAMATION AUTHORITY
HESPERIA WRP - PRELIMINARY DESIGN REPORT

HDR

carollo

SITE LAYOUT

FIGURE 13A.1

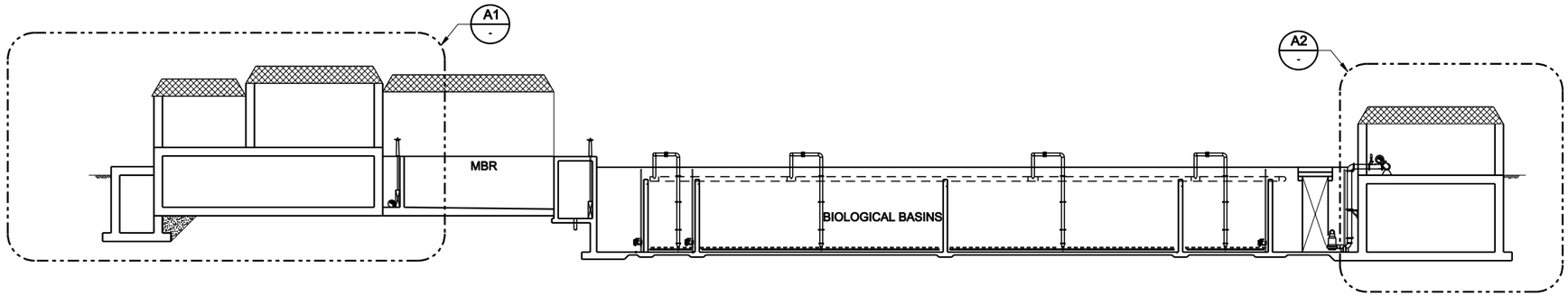

A - SECTION
SCALE: 1/16" = 1'-0"
FILE: 8229A00-SM-0100.dgn
0 2' 4' 6' 12'

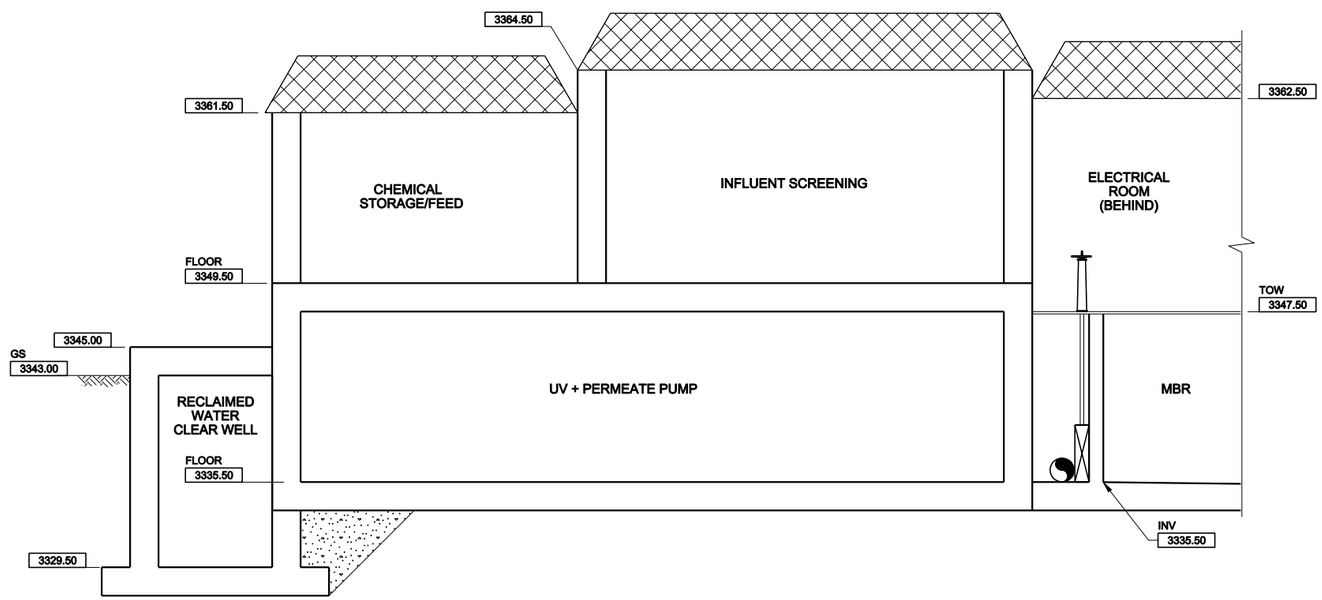

A1 - SECTION
SCALE: 3/16" = 1'-0"
FILE: 8229A00-SM-0100.dgn
0 2' 4' 6' 12'

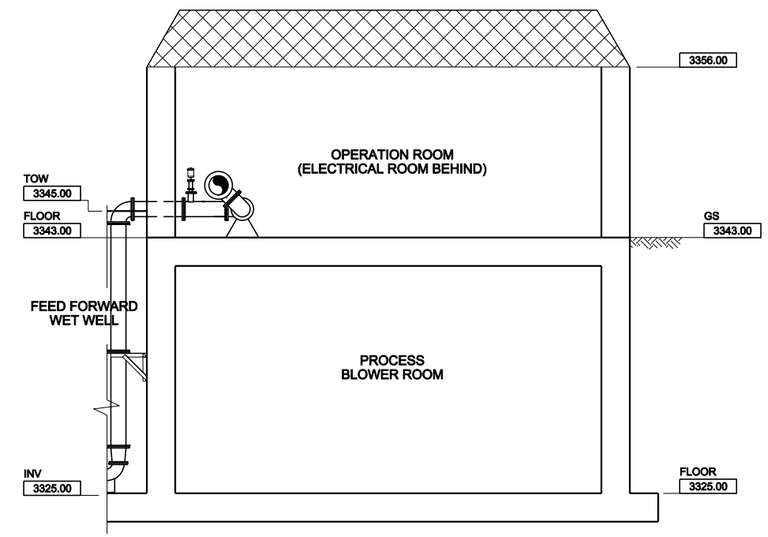

A2 - SECTION
SCALE: 3/16" = 1'-0"
FILE: 8229A00-SM-0100.dgn
0 2' 4' 6' 12'

VICTOR VALLEY WASTEWATER RECLAMATION AUTHORITY
HESPERIA WRP - PRELIMINARY DESIGN REPORT

HDR

carollo

PLANT - SECTION A

FIG 13A.2

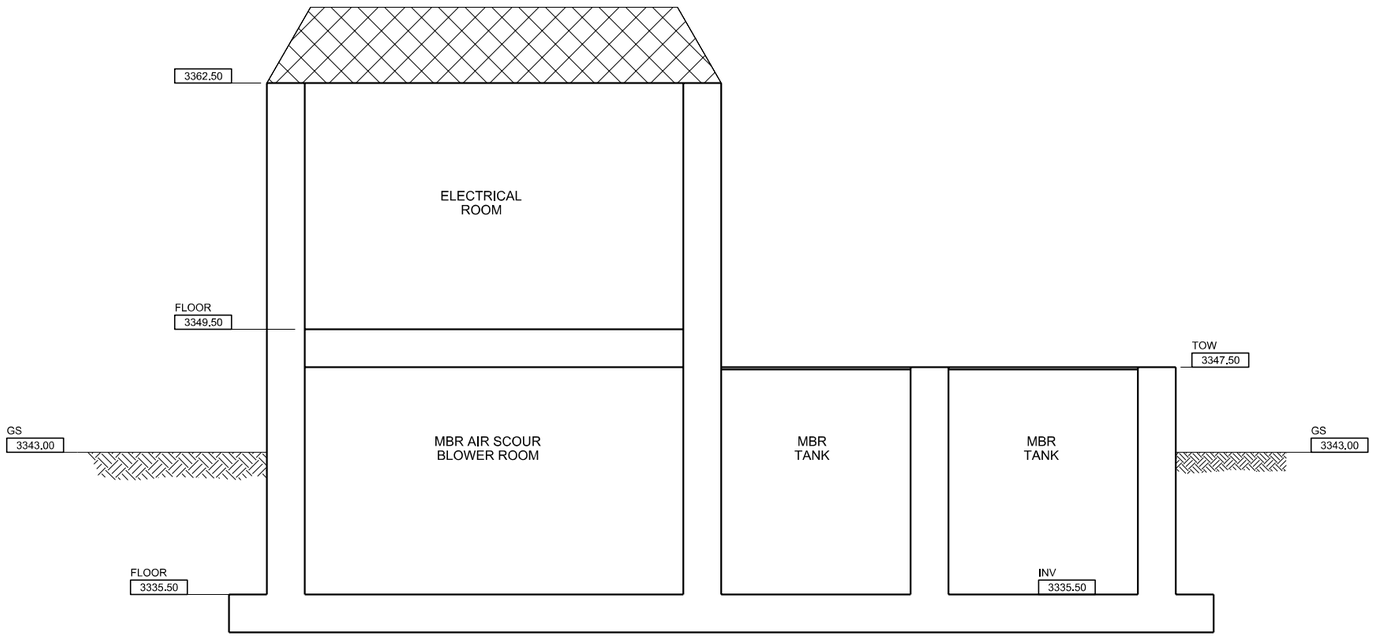

B - **SECTION**

SCALE: 1/4" = 1'-0"
FILE: 8229A00-S-09-300.dgn

0 2' 4' 8'

VICTOR VALLEY WASTEWATER RECLAMATION AUTHORITY
HESPERIA WRP - PRELIMINARY DESIGN REPORT

HDR

carollo

PLANT - SECTION B

FIG 13A.3

APPENDIX 3

Final

PRELIMINARY DESIGN REPORT

City of Hesperia Lift Station and Force Main

December 2009

carollo
Engineers...Working Wonders With Water™

in association with HDR

VICTOR VALLEY WASTEWATER RECLAMATION AUTHORITY

HESPERIA AND APPLE VALLEY WATER RECLAMATION PLANTS

HESPERIA LIFT STATION AND FORCE MAINS

PRELIMINARY DESIGN REPORT

FINAL

December 2009

3033 NORTH 44TH STREET, SUITE 101 • PHOENIX, ARIZONA 85018 • (602) 263-9500 • FAX (602) 265-1422
pw://Carollo/Documents/Client/CA/VVWRA/8229A00/Deliverables/PDR_ESC.doc (Final)

Victor Valley Wastewater Reclamation Authority

HESPERIA LIFT STATION AND FORCE MAINS

PRELIMINARY DESIGN REPORT

TABLE OF CONTENTS

Page No.

1.0 INTRODUCTION 1
2.0 BACKGROUND 1
3.0 BASIS OF DESIGN 2
4.0 FACILITIES DESCRIPTION 4
5.0 PROJECT COSTS AND SCHEDULE 9
5.1 Project Costs 9
5.2 Project Schedule 9

LIST OF APPENDICES

DIM No. 1C Basis of Design and Hydraulics
DIM No. 2C Lift Station Site Layout/Force Main Alignment and Constraints
DIM No. 3C Site Aesthetics
DIM No. 4C Electrical Power and Distribution
DIM No. 5C Instrumentation and Controls
DIM No. 6C Facilities Siting

LIST OF TABLES

Table ESC.1 Design Criteria 2
Table ESC.2 Opinion of Probable Construction Costs 9
Table ESC.3 Project Schedule 9

LIST OF FIGURES

Figure ESC-1 Location Map 3
Figure ESC-2 Lift Station Site Plan 6
Figure ESC-3 Lift Station Isometric Section 7
Figure ESC-4 Overall Site Plan 8

1.0 INTRODUCTION

The City of Hesperia and the Town of Apple Valley with the assistance of the Victor Valley Wastewater Reclamation Authority (VVWRA) have begun implementation of a water reclamation program that involves several subregional water reclamation plants (WRPs) throughout their service areas. The first phase of the water reclamation program involves one WRP located in the City of Hesperia and one WRP located in the Town of Apple Valley. This preliminary design report summarizes our findings and recommendations for the City of Hesperia WRP.

The City of Hesperia WRP will require an upstream connection to the wastewater collection system, a new sewage lift station, and a sewage force main to deliver the influent flow to the WRP. The WRP will produce reclaimed water and will require a reclaimed water pipeline to distribute the water and to convey excess recycled water to a percolation pond. The influent gravity sewer, lift station, force main, and reclaimed water pipeline facilities are the focus of this preliminary design effort.

In order to report the results and conclusions of the preliminary design effort, a series of Design Information Memoranda (DIMs or individually as DIM) were developed. The DIMs, in their entirety, are included under separate tabs within this Preliminary Design Report (PDR). The DIMs discussed in this PDR are as follows.

- DIM No. 1C – Basis of Design and Hydraulics
- DIM No. 2C – Lift Station Site Layout / Force Main Alignment and Constraints
- DIM No. 3C – Site Aesthetics
- DIM No. 4C – Electrical Power and Distribution
- DIM No. 5C – Instrumentation and Controls
- DIM No. 6C – Facilities Siting

2.0 BACKGROUND

The City of Hesperia Recycled Water Master Plan identified locations for two water reclamation plants and a lift station to divert and convey wastewater to WRP-1. During the preparation of the Preliminary Design Report for the City of Hesperia Lift Station and WRP, we identify an alternative location that will better serve the City of Hesperia near and future recycled water system need. An evaluation of the facilities location is presented in Design Information Memorandum No. 6C.

The Hesperia Lift Station (Lift Station) and Force Main will be used to divert wastewater flow from the City of Hesperia wastewater collection system to the new City of Hesperia WRP. Wastewater will be diverted from a 12-inch gravity sewer near the intersection of Mojave Street and Maple Avenue. The proposed Hesperia WRP scalping plant will be located on Mojave Street approximately 1/2 mile west from Maple Avenue. Figure ESC-1 provides an overview of the proposed facilities locations.

3.0 BASIS OF DESIGN

The proposed Hesperia gravity sewer, lift station, and force main design criteria are presented in Table ESC.1.

Table ESC.1 Design Criteria
Hesperia Sewer, Lift Station, Force Main, and Pipeline
Victor Valley Wastewater Reclamation Authority, California

Design Parameters	Units	Phase 1	Phase 2
FLOW RATES			
Design Flow	mgd	1.0	2.0
Minimum Flow	mgd	0.2	0.2
Peak Flow	mgd	1.5	3.0
INFLUENT SEWER			
Size	inches	18	18
Length	feet	550	550
Slope	ft/ft	0.01	0.01
SEWAGE LIFT STATION			
Well Well Configuration		Wet Well / Dry Pit	Wet Well / Dry Pit
Pump Type		Vertical Centrifugal on VFD	Vertical Centrifugal on VFD
Pump Capacity (each)	mgd	1.0	1.0
Number of Pumps (duty + standby)		1 + 1	2 + 1
SEWAGE FORCE MAIN			
Size	inches	1 @ 12	2 @ 12
Length	feet	1,500	1,500
RECLAIMED WATER PIPELINE			
Size	inches	12	12
Length	feet	32,000	32,000

VICTOR VALLEY WASTEWATER RECLAMATION AUTHORITY
HESPERIA WRP - PRELIMINARY DESIGN REPORT

HDR

carollo

LIFT STATION LOCATION MAP

FIG. ESC-1

In addition to the design criteria listed above, the following design constraints were considered in the design:

1. Accessibility – The lift station will be designed to allow for access to mechanical, electrical and instrumentation equipment. Confined space will be limited to the wet well. Stairs will be provided to access all areas in the ventilated dry well.

2. Visual Impacts – The lift station will be located in a subdivision under development, adjacent to new residential homes. Exterior appearance of the facility, including the building and perimeter fence, needs to fit with the surrounding environment.

3. Odor Impacts – With the proximity of residential homes and recreational facilities, the lift station should have features to control the release of odorous air.

4. Noise Impacts – The lift station will include features to reduce noise impacts on the neighboring community.

5. Operational Redundancy – To enable uninterrupted operation of the lift station, redundancy of critical systems is required. This includes standby emergency power and standby pumping capacity equal to the largest pump.

6. Site Restrictions – The proposed site is a double lot measuring approximately 115 feet by 90 feet, with an area of approximately 10,000 square feet. The lift station building and structures will be located on the site with the appropriate building setback and providing vehicular access.

7. Influent Sewer Depth – The depth of the lift station will be driven by the elevation of the existing influent sanitary sewer.

The architectural theme of the lift station building will be based on the theme developed for the WRP, which will incorporate features to mitigate aesthetic concerns with integrating the lift station into the surrounding residential neighborhood. The theme will include a color scheme and screening techniques to obscure and blend the site into the surroundings.

4.0 FACILITIES DESCRIPTION

The area identified for intercepting wastewater is the 12-inch sanitary sewer located in the vicinity of Mauna Loa Street and Maple Avenue. The City of Hesperia identified a potential lift station site now occupied by two adjacent lots located approximately 500 feet west of Maple Avenue on the south side of Mojave Street as shown in Figure ESC-1. The two lots (Assessor's Map Book 0405, Page 71, Lots 147 and 148) have a combined area of approximately 10,000 square feet. The site has an existing block wall along Mojave Street, making the likely access through the subdivision from Primrose Avenue.

Wastewater will be intercepted at the existing 12-inch sanitary sewer in Maple Street after the junction with the 10-inch sewer from Mojave Street. It is proposed to use an 18-inch gravity sewer with a slope of approximately 1.0 percent running west along Mojave Street to the lift station wet well. The preliminary alignment of the interceptor sewer is also shown in Figure ESC-1.

The lift station will have a standard wet well/dry well. Sizing and layout accounts for space requirements for future phased expansion, equipment and vehicular access, equipment maintenance, piping, stairs, and hydraulic requirements. The wet well will be approximately 8 feet by 34 feet and the pump room (dry well) will be approximately 24 feet by 34 feet.

The existing 12-inch sewer at the intersection of Mojave Street and Maple Avenue is approximately 10 feet deep. The lift station ground elevation is approximately 12 feet higher relative to the sewer connection point and the influent sewer will require approximately 5 feet of fall. The influent sewer invert elevation at the lift station will be approximately 27 feet below-grade and the wet well invert will be approximately 35 feet below-grade. The control room and standby emergency power room will be at grade. See Figure ESC-2 for a site plan of the lift station, and Figure ESC-3 for a representative isometric section of the lift station.

The lift station will intercept and pump raw sewage to the Hesperia WRP located approximately 1,500 linear feet west along Mojave Street. The proposed alignment of the two force mains is illustrated in Figure ESC-1.

Discharge of the treated recycled water from the Hesperia WRP will be conveyed to percolation ponds located east of the railroad tracks near Mesa Street. This pipeline will serve as the backbone of the recycled water system. Development of the alignment considers the location of storage for the system and potential users. The length of the recycled water pipeline is approximately 6 miles.

An overview of the recommended facilities is provided in Figure ESC-4.

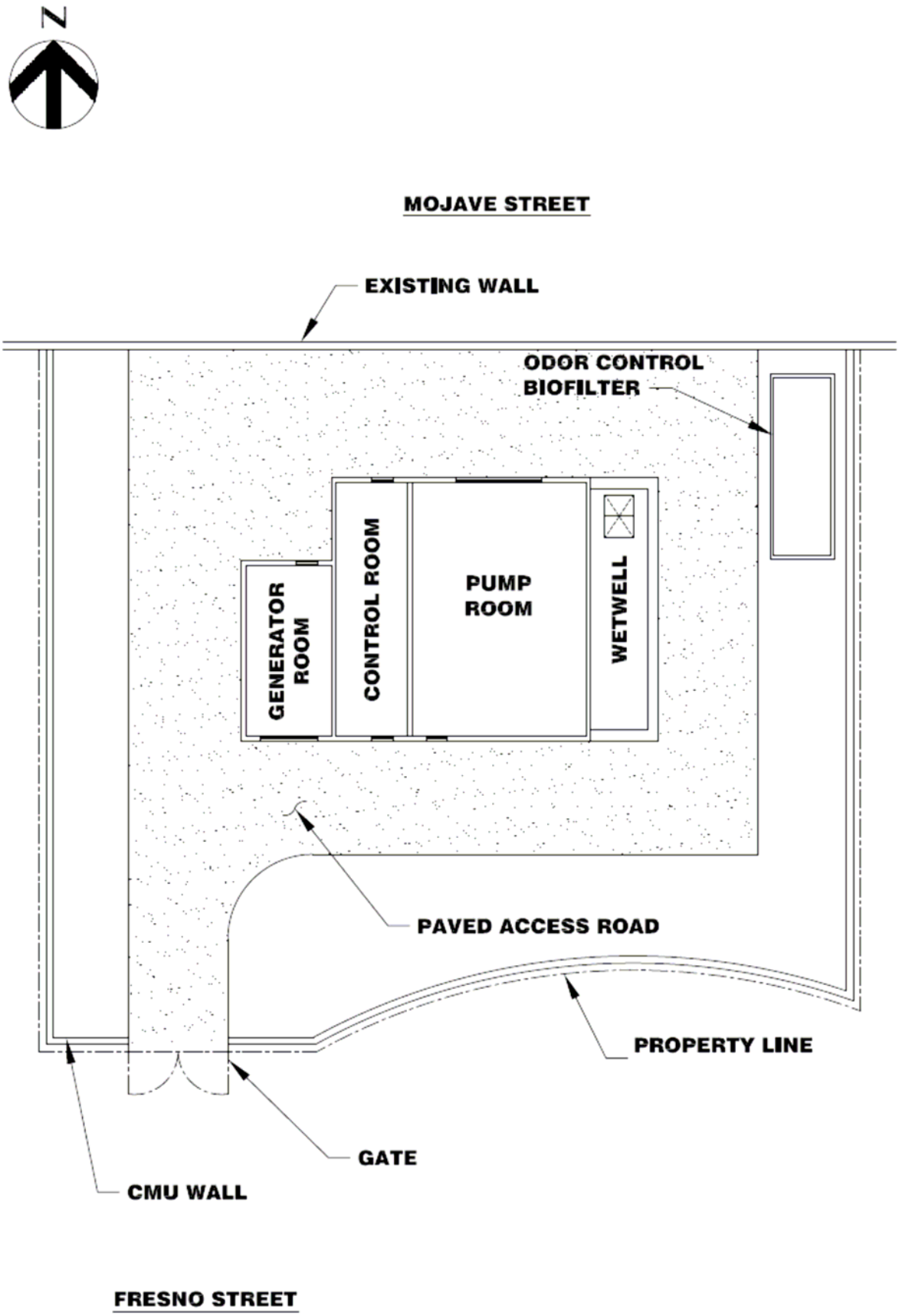

VICTOR VALLEY WASTEWATER RECLAMATION AUTHORITY
HESPERIA WRP - PRELIMINARY DESIGN REPORT

HDR

carollo

LIFT STATION SITE PLAN

FIG. ESC-2

HISPERIA LIFT STATION - SECTION - 2

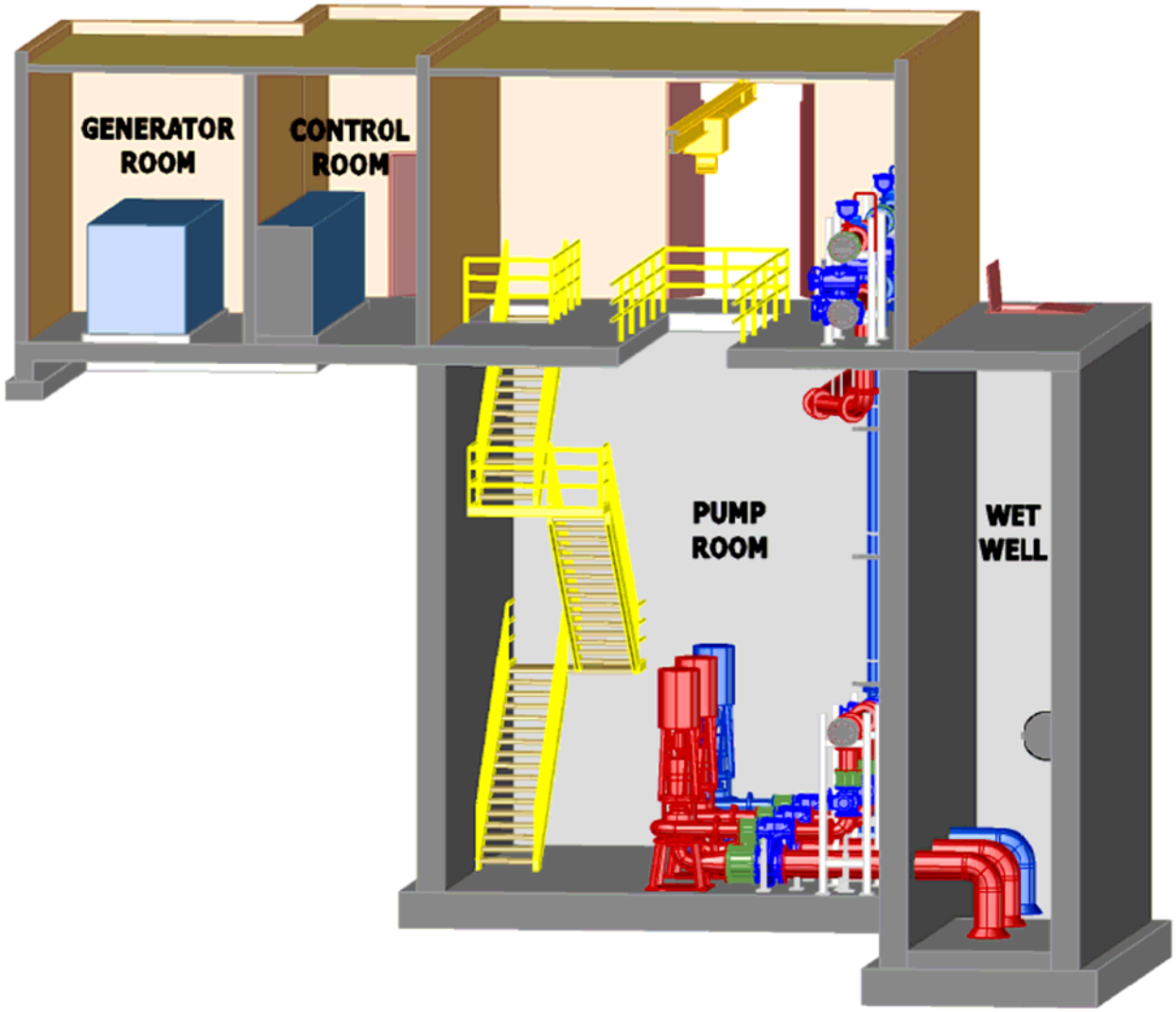

PHASE 1

PHASE 2

SECTION

NTS

FIG. ESC-3

carollo HDR

VICTOR VALLEY WASTEWATER RECLAMATION AUTHORITY
HESPERIA WRP - PRELIMINARY DESIGN REPORT

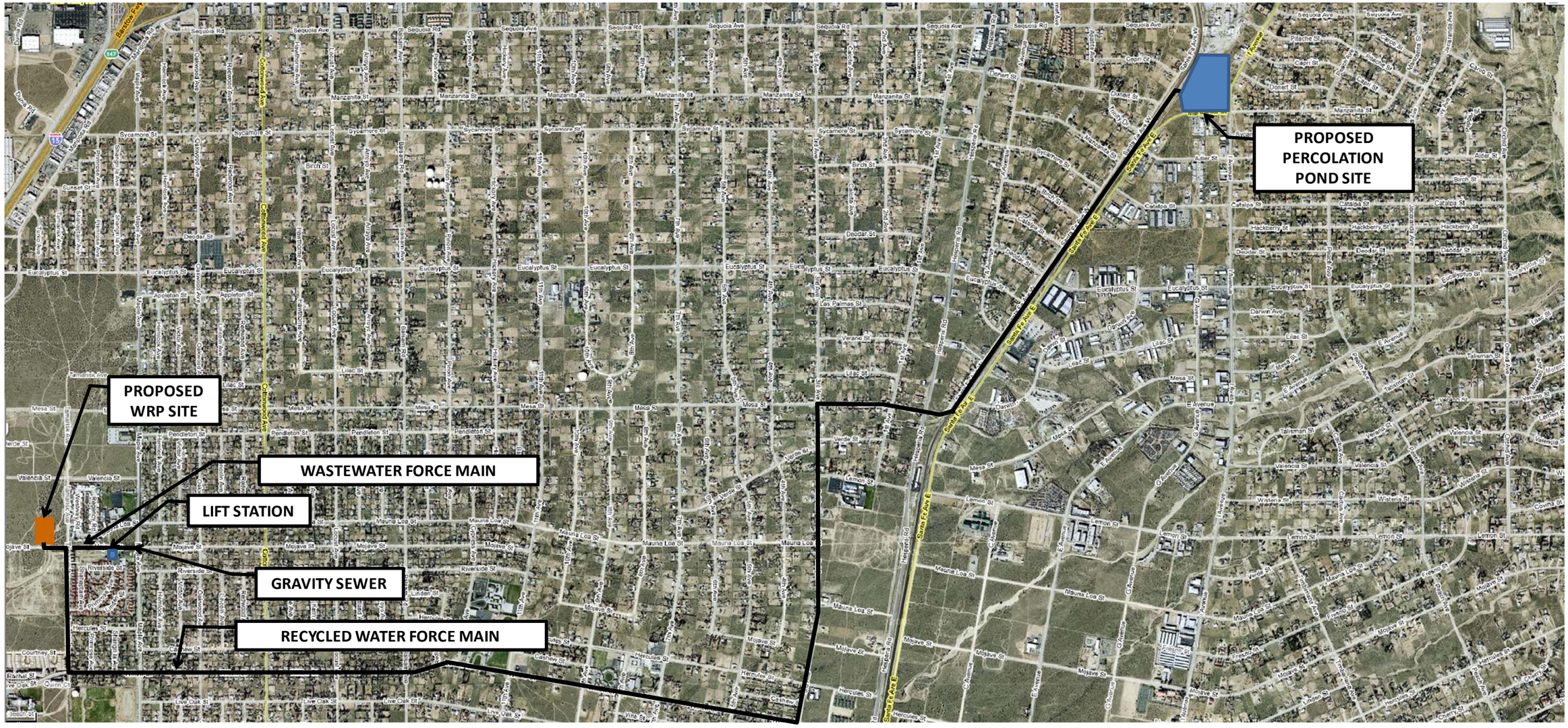

VICTOR VALLEY WASTEWATER RECLAMATION AUTHORITY
HESPERIA WRP - PRELIMINARY DESIGN REPORT

HDR

carollo

OVERALL SITE PLAN

FIG. ESC-4

5.0 PROJECT COSTS AND SCHEDULE

5.1 Project Costs

A summary of the Construction Costs are provided in Table ESC.2. The supporting cost estimate worksheets are provided at the end of the Executive Summary.

Table ESC.2 Opinion of Probable Construction Costs
Hesperia Sewer, Lift Station, Force Main, and Pipeline
Victor Valley Water Reclamation Authority, California

Facility	Total Construction Cost (Thousands)
Influent Sewer	$140
Sewage Lift Station	$3,350
Sewage Force Main	$150
Reclaimed Water Pipeline	$3,470
TOTAL	**$7,110**

Notes:

(1) Total construction cost is escalated to the projected mid-point of construction of March 2011.

Project Schedule

The preliminary project schedule is based upon feedback from VVWRA on the timing of the project and the anticipated construction duration and is presented in Table ESC.3.

Table ESC.3 Project Schedule
Hesperia Sewer, Lift Station, Force Main, and Pipeline
Victor Valley Water Reclamation Authority, California

Activity	Duration
Detailed Design (1)	8 months
Bidding Phase (2)	3 months
Construction Phase (3)	18 months

Notes:

(1) Detail design starts upon Notice to Proceed.

(2) Bidding phase starts following detail design completion. The time of bidding phase is contingent upon funding.

(3) Construction starts following bidding phase.

DESIGN INFORMATION MEMORANDUM NO. 1C

BASIS OF DESIGN AND HYDRAULICS

Project Name:	Hesperia and Apple Valley Scalping WRPs, Raw Sewage Lift Station and Force Mains		
Client:	Victor Valley Wastewater Reclamation Authority	**Date:**	December 2009

INTRODUCTION AND PURPOSE

The proposed Hesperia Raw Sewage Lift Station and Force Main will be used to divert wastewater flow from the City of Hesperia wastewater collection system to the new City of Hesperia Water Reclamation Plant (WRP). Wastewater will be diverted from an existing 12-inch gravity sewer located near the intersection of Mojave Street and Maple Avenue. The proposed Hesperia WRP will be located on Mojave Street approximately 1/2-mile west from Maple Avenue. Figure 1C.1 provides an overview of the proposed facilities locations.

The purpose of this Design Information Memorandum (DIM) No. 1C is to identify the preliminary design criteria for the gravity sewer feeding the lift station wet well, the lift station and the force main between the lift station and the Hesperia WRP, and evaluate the physical and institutional constraints on the system hydraulics. The information presented here in is based on findings and recommendations summarized in DIM-6C. This DIM recommended the final lift station and WRP locations.

BASIS OF DESIGN

Lift Station and Gravity Sewer Criteria

Flow Projections

The lift station will be designed to deliver wastewater to the Hesperia WRP in three phases. Phase 1 will convey 1.0 million gallons per day (mgd) and Phases 2 and 3 would increase the lift station capacity to 2.0 mgd and 4.0 mgd, respectively. Implementation of Phases 2 and 3 will be dependant upon future water reclamation demands and availability of wastewater in this section of the collection system. The City of Hesperia Wastewater Master Plan (Carollo Engineers, 2008) indicates that wastewater generated by Planning Areas 7, 8, 9, 11, 12, 13 and 14 will flow by the location of the proposed structure that would be used to divert wastewater to the lift station wet well.

Peaking Factor

The projected dry weather diurnal wastewater flow variation will not allow for a constant withdrawal of the Phase 1 design flow rate from the collection system over the course of the day. Flow rates in the collection system range from less than 0.4 mgd in the early hours of the morning to 1.5 mgd in the evening. Based on available data for the collection system, it is proposed to design the lift station to meet the projected dry weather sewer collection system peaking factor of 1.5.

Wet Well Sizing

The lift station will be designed to handle dry weather flows only, such that wet weather flows will be allowed to continue flowing through the gravity sewer past the station. On this basis, the wet well size will be smaller than that typically associated with a lift station of this capacity. In addition, the pumps will be equipped with variable frequency drives (VFDs), thus further reducing the wet well volume requirements. The wet well will primarily be sized based upon the minimum submergence of the ultimate pump impeller, with consideration for a five-minute minimum pump run time at reduced pump speed during low flows in the gravity sewer. A self-cleaning wet well design will be incorporated into facility layout.

Pump Sizing and Operation

The lift station pumping equipment will be designed to convey the varying desired flow rate over the course of the day using VFDs, with the pump range matching the diurnal flow variations. The Phase 1 pumps will be sized for a minimum rated capacity of 1.5 mgd (1,050 gpm), with a turndown to 0.4 mgd if possible. The preferred option for sizing the pumps is for one pump to handle the design flow, with a second (standby) pump to allow for pump alternation and backup service. The pumping equipment VFDS will minimize wet well water level variations and facilitate operation of the lift station. Low water level switches will shutdown the pumps.

The lift station pumping equipment will be selected to facilitate the planned Phase 2 and Phase 3 expansions. Upgrading for Phase 2 flows should consist of pump impeller and motor replacement only, with no pump settings or piping modifications necessary. Further improvements for Phase 3 would then involve a third pump installation, with no further modifications required to the pumping equipment. The differential capital cost for a lift station sized for 1.5 MGD or 4.0 MGD average flow is insignificant.

The horsepower and suction head requirements will be set by the worst case conditions, so as the force main ages and reductions in pipe smoothness are experienced, the pumps will still be capable of delivering the design flow rate.

Equipment Accessibility

A wet well/dry well lift station arrangement is proposed to provide easy access to all equipment. All valves and metering equipment will be located at elevations, which will allow for personnel access from floor level. Pump and motor installation/removal will be performed using on-site power hoist and trolley units.

Velocities

Gravity sewer pipe velocities should range between a minimum of 2 feet per second (fps) and a maximum of 10 fps at peak design flow.

Force Main Criteria

Pumping Rates

The proposed phasing of the Hesperia Lift Station from an initial 1.0 mgd to 2.0 mgd and then an ultimate 4 mgd will need to be handled by the force main system. With a proposed hydraulic peaking factor of 1.5, the design flow rates are 1,050 gpm for Phase 1, rising to 2,100 gpm for Phase 2, and ultimately 4,200 gpm for Phase 3. VFDs will be used to reduce the pumping to

match the reduced overnight flows, expected to be in the 300 gpm range for Phase 1, around 600 gpm for Phase 2, and 1,100 gpm for Phase 3. The range in flow rates is extreme and lends itself to the need for more than one force main to handle the ultimate capacity.

Velocities

Pump suction pipe velocities should generally not exceed 5 fps. Pump discharge pipe velocities are typically recommended to range between 2 fps and 8 fps. During reduced overnight flows, velocities will fall below the 2 fps level, but the diurnal peak flows from the pumps should be over 2.5 fps, which will prevent solids deposits in the force main.

C Factors

Friction losses in the force main are calculated using C factors that approximate the roughness of the pipe. For the evaluation of the proposed Hesperia Lift Station, C factor values of 110, 130 and 140 will be used to estimate how the dynamics of the pipeline head losses will change over time.

Pipeline Pressure Rating

Pipe pressure rating will be influenced by the typical operating conditions and the estimated surge pressures that will be experienced. For standard ductile iron pipe (DIP), the pressure rating for piping up to 24-inch diameter is 350 psi (808 feet of head). PVC piping is available in various pressure classes from 165 psi (DR 25) to 305 psi (DR 14) for 4-inch to 12-inch diameter AWWA C-900 pipe and from 80 psi (DR 51) to 235 psi (DR 18) for 14-inch to 48-inch diameter AWWA C-905 pipe.

GRAVITY SEWER HYDRAULICS

Wastewater will be intercepted at the existing 12-inch sanitary sewer located in Maple Street after the junction with the 10-inch sewer from Mojave Street. An 18-inch gravity sewer with a slope of about 1.0 percent running west along Mojave Street to the lift station wet well is proposed. The gravity sewer will be sized to handle the projected peak diurnal flow rate of 6 mgd associated with the 4 mgd Phase 3 design capacity. The preliminary alignment of the interceptor sewer is shown in Figure 1C.1. Total sewer length is estimated at 550 linear feet.

LIFT STATION HYDRAULICS

In evaluating the proposed lift station force main to the Hesperia WRP, two alternatives for pipe sizing were considered based upon meeting the Phase 1 and 2 operating conditions using a single force main. Considering acceptable velocities, the initial pipe can be either 10 inches or 12 inches in diameter. For future Phase 3 flows, a second force main would be added, either a 14-inch pipeline to complement the 10-inch option, or another 12-inch force main to go with the 12-inch option.

Static Head Conditions

The proposed location of the Hesperia Lift Station has a finished grade elevation of approximately 3,325 feet MSL. The sanitary sewer where flow will be diverted to the lift station has an invert elevation of 3,303 feet MSL. A low lift station wet well water level of 3,295 feet MSL is assumed. The proposed Hesperia WRP site located northwest of the intersection of

Mojave Street and Arash Lane has an estimated finished grade elevation of 3,345 feet MSL. Following the proposed route from the proposed lift station to the WRP along Mojave Street, the grade has a consistent rise, with the highest elevation at the WRP site. The estimated high point for the force main is approximately elevation 3,345 feet MSL. The elevation of the WRP headworks may be as high as 12 feet above finished grade. This yields a static head for the lift station of about 62 feet.

Frictional Head Conditions

The 1,500-foot long force main will follow the Mojave Street alignment. To meet the force main design criteria listed above, one force main sized for the future design flow is not satisfactory to meet the Phase 1 design requirements. The project will require two parallel force mains to meet the wide flow range that will encompass the Phase 1 low flows (0.4 mgd) and the Phase 3 peak flows (4.0 mgd).

The frictional hydraulics calculated using the indicated factors for each alternative are summarized below in Table 1C.1. Headloss conditions for Phase 2 are the most critical in selecting the force main size.

Table 1C.1 Select Force Main Frictional Headlosses
Hesperia WRP Design Information Memoranda
Victor Valley Wastewater Reclamation Authority, California

	Peak Flow, C = 110	**Peak Flow, C = 130**	**Peak Flow, C = 140**
Phase 1 – 1 mgd	10" FM HL = 15' 12" FM HL = 8'	10" FM HL = 12' 12" FM HL = 7'	10" FM HL = 11' 12" FM HL = 6'
Phase 2 – 2 mgd	10" FM HL = 55' 12" FM HL = 29'	10" FM HL = 44' 12" FM HL = 25'	10" FM HL = 40' 12" FM HL = 23'
Phase 3 – 4 mgd	10" & 14" FM HL = 27' Dual 12" FM HL = 29'	10" & 14" FM HL = 23' Dual 12" FM HL = 25'	10" & 14" FM HL = 21' Dual 12" FM HL = 23'

Velocities for the force mains evaluated are typically in the 2.5 fps to 6 fps range with the exception of the 10-inch force main option for Phase 2, which has a peak velocity of 8 fps.

Total Head Conditions

The lift station total discharge head requirements will depend on the flow rate and the number and size of the force mains required to handle the Phase 1 and Phase 3 flows. Using a single force main for Phase 1 and parallel force mains for Phase 3 will not have a significant impact on the lift station pump and motor selection. The total discharge requirements for the Phase 2 conditions impacts the force main and pumping equipment selection. Lift station operational data for selected flows and frictional coefficients are shown in Table 1C.2. The Phase 1 pumping equipment requires 40-hp motors. The difference in head conditions for Phase 2 varies from 17 to 25 feet if the force main is 10 or 12 inches in diameter. This differential head requires that the motor horsepower requirements be increased from 75 to 100 to meet peak flow conditions when using a 10-inch line.

Table 1C.2 Select Force Main Total Headlosses
Hesperia WRP Design Information Memoranda
Victor Valley Wastewater Reclamation Authority, California

	Peak Flow, C = 110	Peak Flow, C = 130	Peak Flow, C = 140
Phase 1 – 1 mgd	10" FM HL = 77' 12" FM HL = 70'	10" FM HL = 74' 12" FM HL = 69'	10" FM HL = 73' 12" FM HL = 68'
Phase 2 – 2 mgd	10" FM HL = 117' 12" FM HL = 91'	10" FM HL = 106' 12" FM HL = 87'	10" FM HL = 102' 12" FM HL = 85'
Phase 3 – 4 mgd	10" & 14" FM HL = 89' Dual 12" FM HL = 91'	10" & 14" FM HL = 85' Dual 12" FM HL = 87'	10" & 14" FM HL = 83' Dual 12" FM HL = 85'

FINAL DESIGN RECOMMENDATIONS

1. Gravity Sewer – An 18-inch gravity sewer installed at a 1.0 percent slope is recommended. During Phase 1 low flow conditions, the sewer will have a velocity of at least 3 fps to prevent solids settlement. At Phase 3 peak flow conditions, the sewer will have a velocity of about 6 fps.

2. Force Main – A 12-inch force main having a pressure rating of 165 psi is recommended, with a second 12-inch force main to be constructed for the Phase 3 improvements. The headlosses associated with this size force main allow for the pumps selected for Phase 2 to be used without modification in Phase 3. The velocities and pressures associated with the 12-inch force main are within the design criteria established. During Phase 1, typical system operating pressures will be under 35 psi, with velocities ranging from about 1 fps during late night low periods to about 2.75 fps during peak flow times. For Phases 2 and 3, typical system pressures increase up to about 40 psi and the velocities will vary from 1.5 fps to 5.5 fps.

3. Pumping Equipment – Selection of a pump that can be used for all three phases of the lift station with only changing the impeller and motor appears to be possible. For Phase 1, two 40-hp pumps with VFDs is recommended. The implementation of Phase 2 will involve the replacement of the pump impellers and increasing the motor size to 75 hp, with no piping revisions needed. Phase 3 improvements would be limited to the addition of a third 75-hp pump equipped with VFD drive, plus piping and appurtenances associated with the third pump. No changes to the two 75-hp Phase 2 pumps are required with the Phase 3 improvements.

VICTOR VALLEY WASTEWATER RECLAMATION AUTHORITY
HESPERIA WRP - PRELIMINARY DESIGN REPORT

HDR

carollo

LIFT STATION LOCATION MAP

FIGURE 1C.1

DESIGN INFORMATION MEMORANDUM NO. 2C

LIFT STATION SITE LAYOUT/FORCE MAIN ALIGNMENT AND CONSTRAINTS

Project Name:	Hesperia and Apple Valley Scalping WRPs, Raw Sewage Lift Station and Force Mains		
Client:	Victor Valley Wastewater Reclamation Authority	**Date:**	December 2009

INTRODUCTION AND PURPOSE

The proposed Hesperia Raw Sewage Lift Station will divert flow from the City of Hesperia wastewater collection system to the new Hesperia WRP. The proposed location of the diversion structure is the intersection of Mojave Street and Maple Avenue, while the proposed location of the WRP is 1/2-mile to the west of Maple Avenue along Mojave Street. The lift station will be designed for an initial capacity of 1.0 million gallons per day (mgd) average flow, with the ability for phased expansion of pumping capacity to 2 mgd and 4 mgd average flow under Phase 2 and Phase 3, respectively. Figure 2C.1 shows the approximate location of the facilities.

The purpose of this Design Information Memorandum (DIM) No. 2C is to identify and evaluate lift station configurations considering the possible pumping options, future expansion, and routing for the wastewater force main and the recycled water pipeline from the Hesperia WRP to the proposed percolation ponds.

LIFT STATION CONFIGURATION AND SITE LAYOUT

The area identified for intercepting wastewater is the existing 12-inch sanitary sewer located in the vicinity of Mauna Loa Street and Maple Avenue. The City of Hesperia has indicated that a potential lift station site is the area occupied by two adjacent lots located approximately 500 feet west of Maple Avenue on the south side of Mojave Street (as shown in Figure 2C.1). The two lots (Assessor's Map Book 0405, Page 71, Lots 147 and 148) have a combined area of approximately 10,000 square feet. The site has an existing block wall along Mojave Street, making the likely access through the subdivision from Primrose Avenue.

Wastewater will be intercepted at the existing 12-inch sanitary sewer in Maple Street after the junction with the 10-inch sewer from Mojave Street. An 18-inch gravity sewer with a slope of approximately 1.0 percent running west along Mojave Street to the lift station wet well was proposed in DIM No. 1C. The gravity sewer will be sized to handle the projected peak diurnal flow rate associated with Phase 3 design capacity (4 mgd average, 6 mgd peak). The preliminary alignment of the interceptor sewer is also shown in Figure 2C.1.

Lift station configuration options included submersible pumps with limited above-grade structures, a standard wet well/dry well configuration, and a below-grade wet well/dry well configuration. Upon consultation with VVWRA, a consensus for the standard wet well/dry well configuration was decided, as this provided equipment access, reasonable construction cost, and facilities that are aesthetically-compatible with the adjacent residential neighborhood.

Design Constraints

The following constraints and considerations will be incorporated into the lift station design:

1. Accessibility – The lift station will be designed to allow for access to mechanical, electrical and instrumentation equipment. Confined space will be limited to the wet well. Stairs will be provided to access all areas in the ventilated dry well.
2. Visual Impacts – The lift station will be located in a subdivision under development, adjacent to new residential homes. Exterior appearance of the facility, including the building and perimeter fence, needs to fit with the surrounding environment.
3. Odor Impacts – With the proximity of residential homes and recreational facilities, the lift station should have features to control the release of odorous air.
4. Noise Impacts – The lift station will include features to reduce noise impacts in the neighboring community.
5. Operational Redundancy – To enable uninterrupted operation of the lift station, redundancy of critical systems is required. This includes standby power and standby pumping capacity equal to the largest pump.
6. Site Restrictions – The proposed site is a double lot measuring approximately 115 feet by 90 feet, with an area of approximately 10,000 square feet. The lift station building and structures will be located on the site with the appropriate building setback and providing vehicular access.
7. Influent Sewer Depth – The depth of the lift station will be driven by the elevation of the existing influent sanitary sewer.

The aesthetic constraints listed above are further discussed in DIM No. 3C.

Lift Station Layout

The lift station sizing and layout account for space requirements for future phased expansion, equipment and vehicular access, equipment maintenance, piping, stairs, and hydraulic requirements. The wet well will be approximately 8 feet by 34 feet and the pump room (dry well) will be approximately 24 feet by 34 feet.

The existing 12-inch sewer at the intersection of Mojave Street and Maple Avenue is approximately 10 feet deep. The lift station ground elevation is approximately 12 feet higher relative to the sewer connection point and the influent sewer will require approximately 5 feet of fall. The influent sewer invert elevation at the lift station will be approximately 27 feet below grade and the wet well invert will be approximately 35 feet below grade. The control room and standby generator room will be at grade. See Figure 2C.3 for the plan views of the lift station, and Figures 4 and 5 for isometric sections of the lift station.

FORCE MAIN ALIGNMENT

The proposed lift station will intercept and pump raw sewage to the Hesperia WRP located approximately 1,500 linear feet west along Mojave Street. The proposed alignment is illustrated in Figure 2C.1. Due to the direct nature of the alignment, no other routing alternatives were investigated.

DIM No. 1C recommended a force main sizing of 12-inch diameter to meet flows up to 2 mgd (Phases 1 and 2) average daily flow and a second 12-inch force main used in conjunction with the initial force main to convey the future 4 mgd (Phase 3) average daily flow.

Design Constraints

The following constraints have been identified in determining the alignment for the raw sewage force main.

1. Utilities – The number of existing utilities and their placement within right-of-ways will impact the proposed alignment for the force main. Adequate separation will be required from any potable water lines, as well as appropriate clearances from other utilities.
2. Right-of-Ways – Installation of the raw sewage force main is allowed longitudinal in right-of-ways with the exception of freeways. The proposed alignment along Mojave Street appears to have dedicated right-of-ways along the entire alignment of the force main. Widths of existing right-of-ways are also of concern to allow for installation of the new pipelines while maintaining necessary horizontal separation from existing utilities.

RECYCLED WATER LINE ALIGNMENT

Discharge of the treated recycled water from the Hesperia WRP will be conveyed to proposed percolation ponds located east of the railroad tracks near Mesa Street. This pipeline will serve as the backbone of the recycled water system. Development of the alignment considers the location of storage for the system and potential users. During meetings with VVWRA personnel, a route was selected that accounted for these requirements. The proposed alignment is shown in Figures 2C.6, 2C.7, 2C.8, 2C.9 and 2C.10. The length of the recycled water pipeline is approximately 6 miles.

The pipeline will go east along Mojave Street from the Hesperia WRP, turn south onto Tamarisk Avenue, then turn east onto Willow Street. A storage reservoir is proposed at the intersection of Tamarisk Avenue and Willow Street, as this will be a high point for the system (Figure 2C.6). The alignment then goes east along Willow Street (Figure 2C.7) to Third Avenue. A stub is provided at Eighth Avenue for a future expansion to the south. The alignment turns north onto Third Avenue (Figure 2C.8) to Mesa Street, where it turns east. The pipeline goes east on Mesa Street and turns northeast onto Santa Fe Avenue, which runs parallel to the railroad (Figure 2C.9). The alignment will turn east and cross under the railroad tracks just north of Donert Street, and terminate at the proposed location of the percolation ponds (Figure 2C.10).

Design Constraints

The following constraints have been identified in determining the alignment for the recycled water force main.

1. Utilities – The number of existing utilities and their placement within right of ways will impact the proposed alignment for the recycled water line. Adequate separation will be required from any potable water lines, as well as appropriate clearances from other utilities.
2. Right-of-Ways – Widths of existing right-of-ways may be of concern to allow for installation of the new pipeline while maintaining necessary horizontal separation from existing utilities.

3. Railroad Crossing – The crossing of the railroad tracks at Mesa Street will require encroachment permits.

FINAL DESIGN RECOMMENDATIONS

The lift station design, gravity sewer alignment, raw sewage force main alignment, and recycled water pipeline alignment have been developed based on available information and are preliminary. Following concurrence from VVWRA regarding the design, it is recommended to proceed with final design, including further investigations to address the constraints identified herein.

VICTOR VALLEY WASTEWATER RECLAMATION AUTHORITY
HESPERIA WRP - PRELIMINARY DESIGN REPORT

HDR

carollo

LIFT STATION LOCATION MAP

FIGURE 2C.1

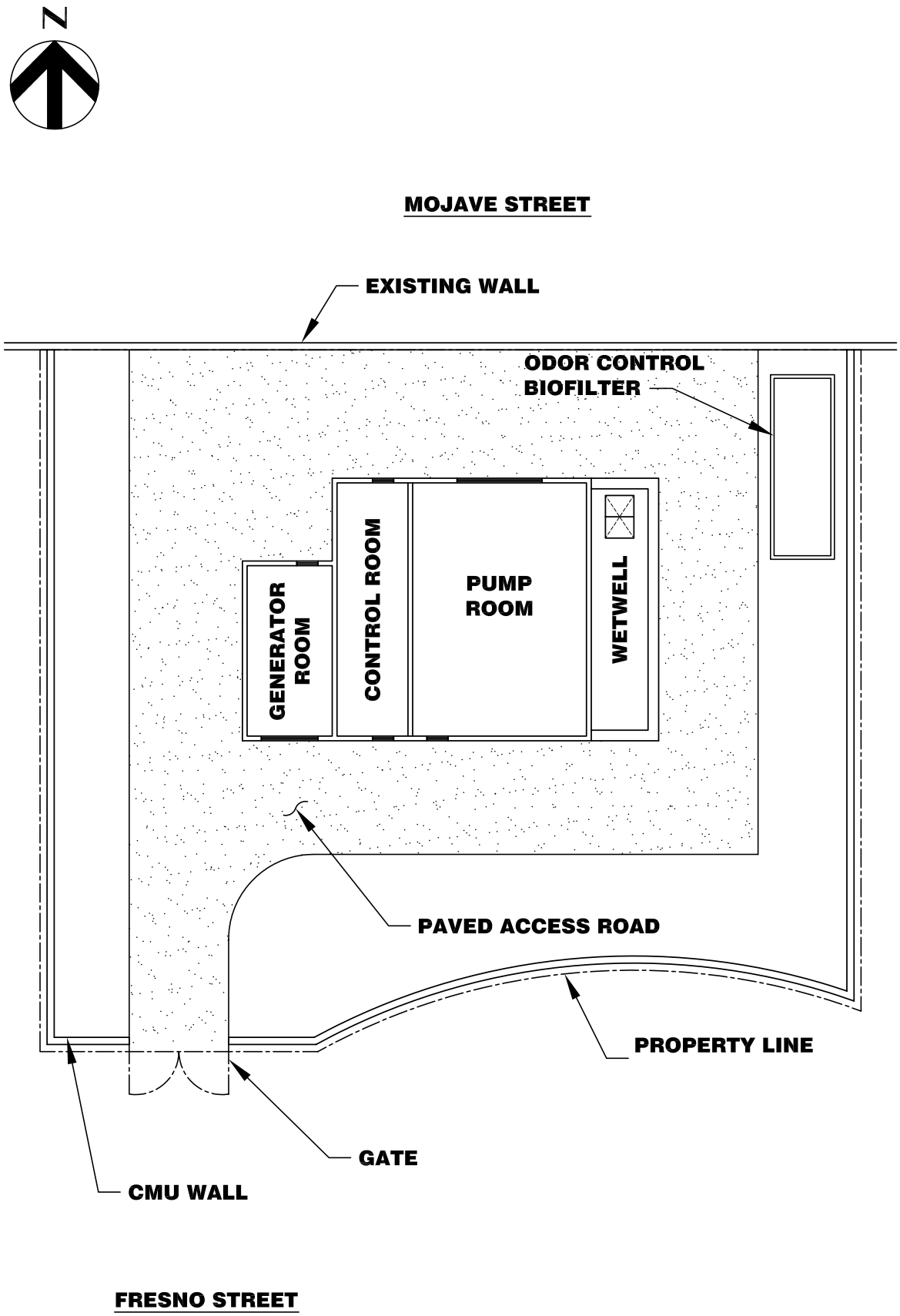

VICTOR VALLEY WASTEWATER RECLAMATION AUTHORITY
HESPERIA WRP - PRELIMINARY DESIGN REPORT

HDR

carollo

LIFT STATION SITE PLAN

FIGURE 2C.2

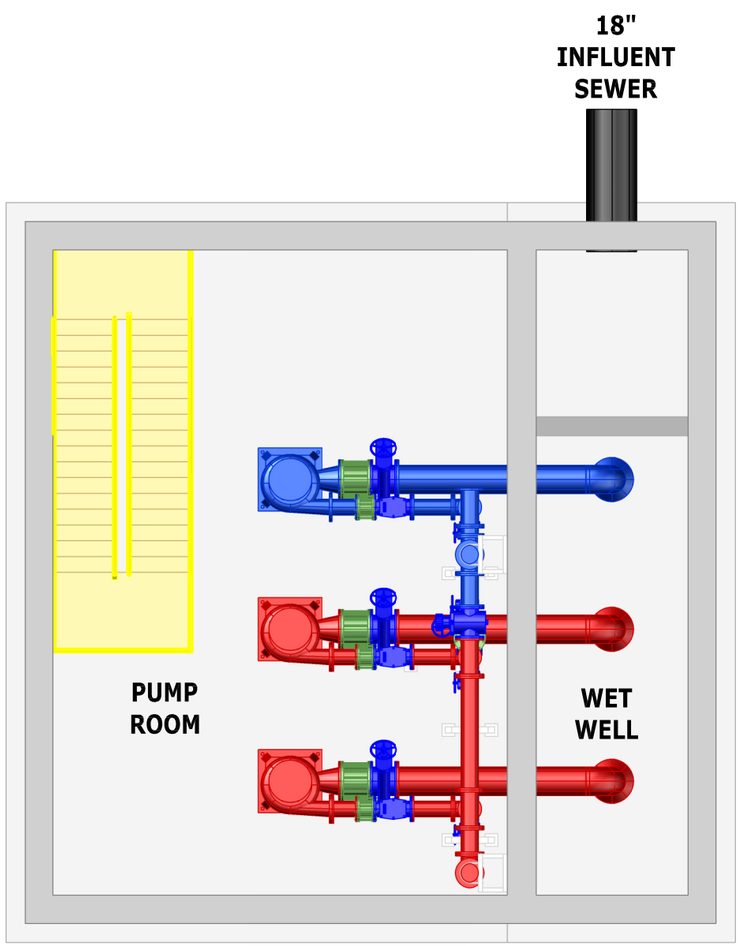

BOTTOM FLOOR
SCALE: 1/8"=1'-0"

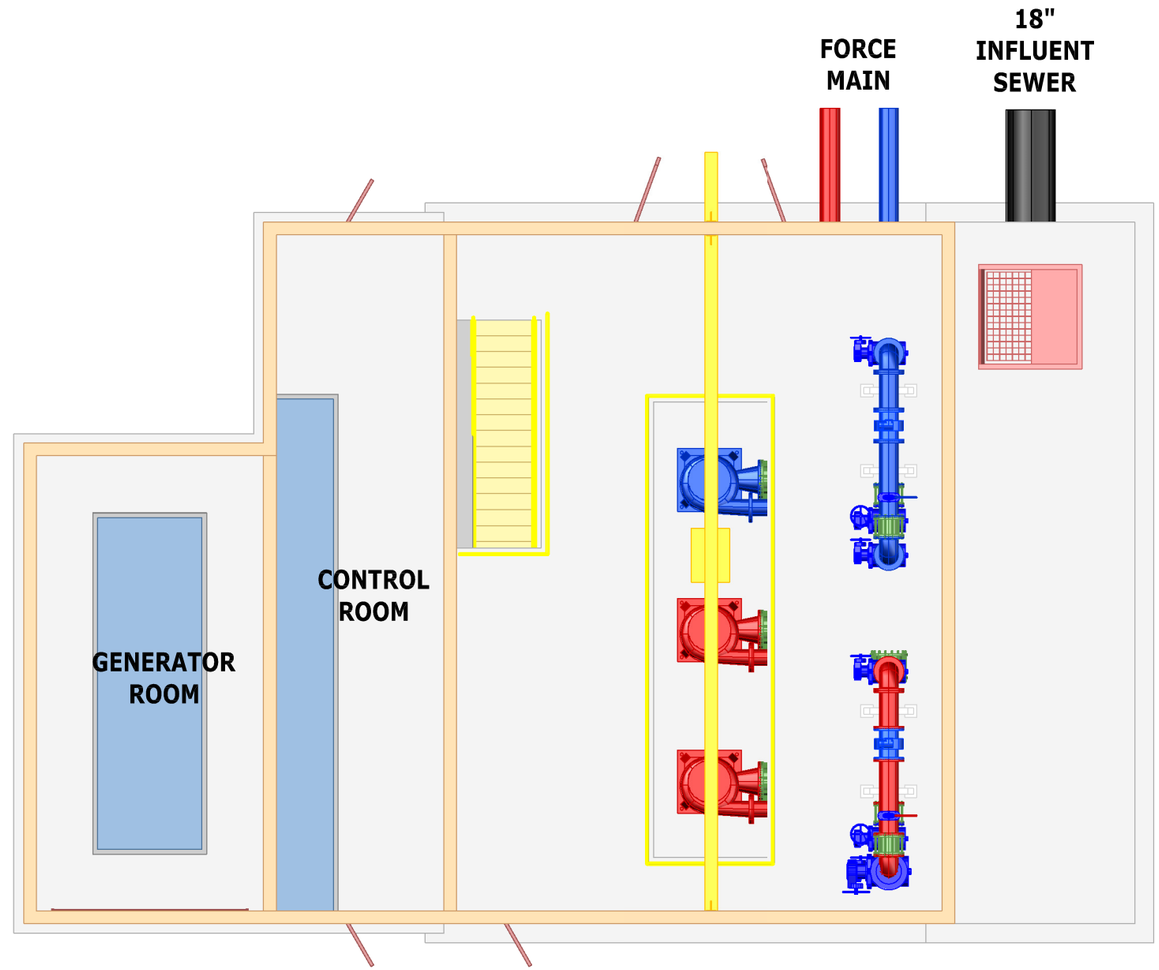

TOP FLOOR
SCALE: 1/8"=1'-0"

PHASE 1

PHASE 2

N

VICTOR VALLEY WASTEWATER RECLAMATION AUTHORITY
HESPERIA WRP - PRELIMINARY DESIGN REPORT

HDR

carollo

HISPERIA LIFT STATION - TOP & BOTTOM PLAN

FIGURE 2C.3

C:\Documents and Settings\slin\My Documents\AutoCAD\DWG\3D MODELS\VICTOR VALLEY\satellite\HISPERIA-FIGURE2c-3.dwg, Figure 03, 10/1/2009 11:08:49 AM, slin

HESPERIA LIFT STATION - ISOMETRIC SECTION - 1

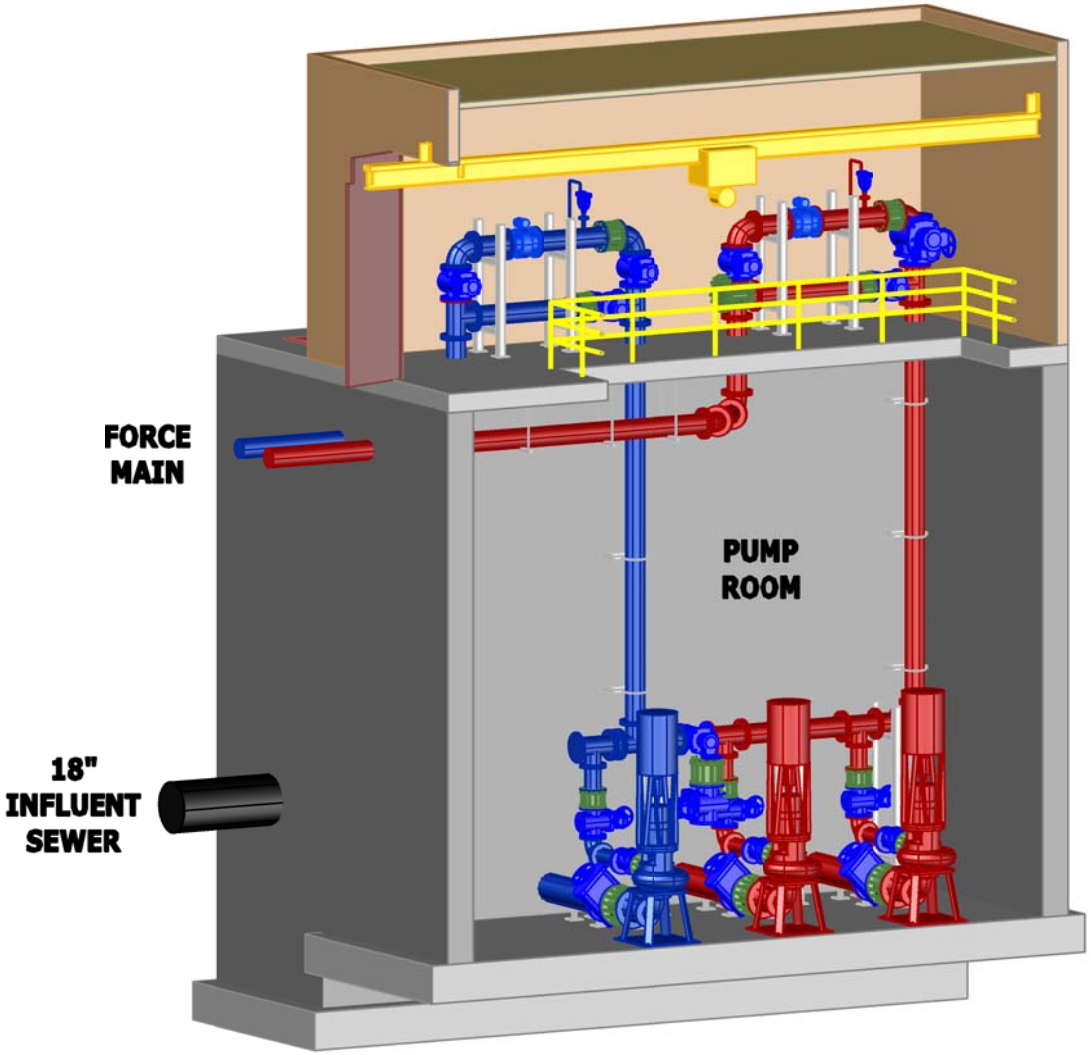

PHASE 1

PHASE 2

SECTION

NTS

FIGURE 2C.4

carollo HDR

VICTOR VALLEY WASTEWATER RECLAMATION AUTHORITY
HESPERIA WRP - PRELIMINARY DESIGN REPORT

HESPERIA LIFT STATION - SECTION - 2

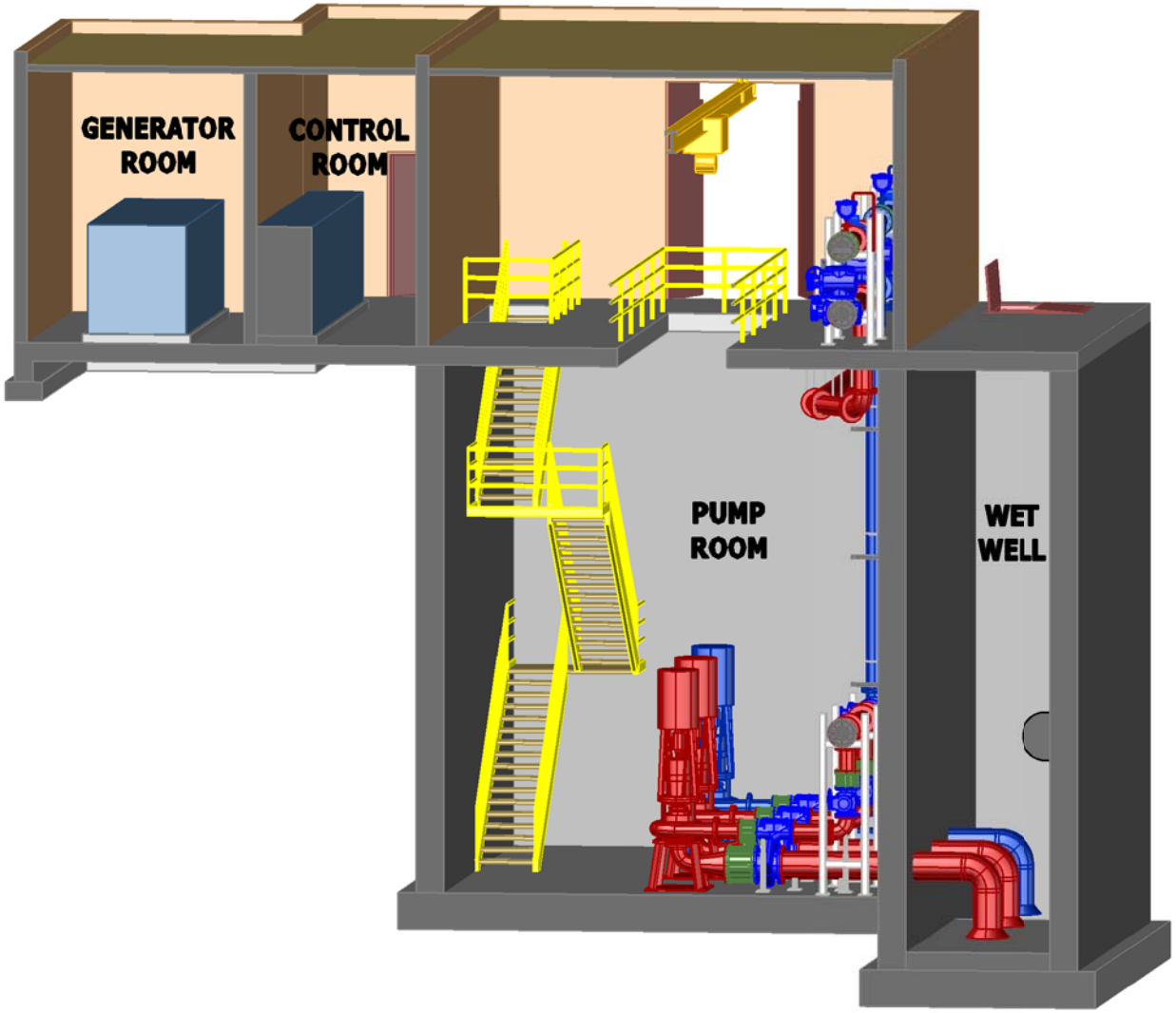

PHASE 1

PHASE 2

SECTION
NTS

FIGURE 2C.5

carollo HDR

VICTOR VALLEY WASTEWATER RECLAMATION AUTHORITY
HESPERIA WRP - PRELIMINARY DESIGN REPORT

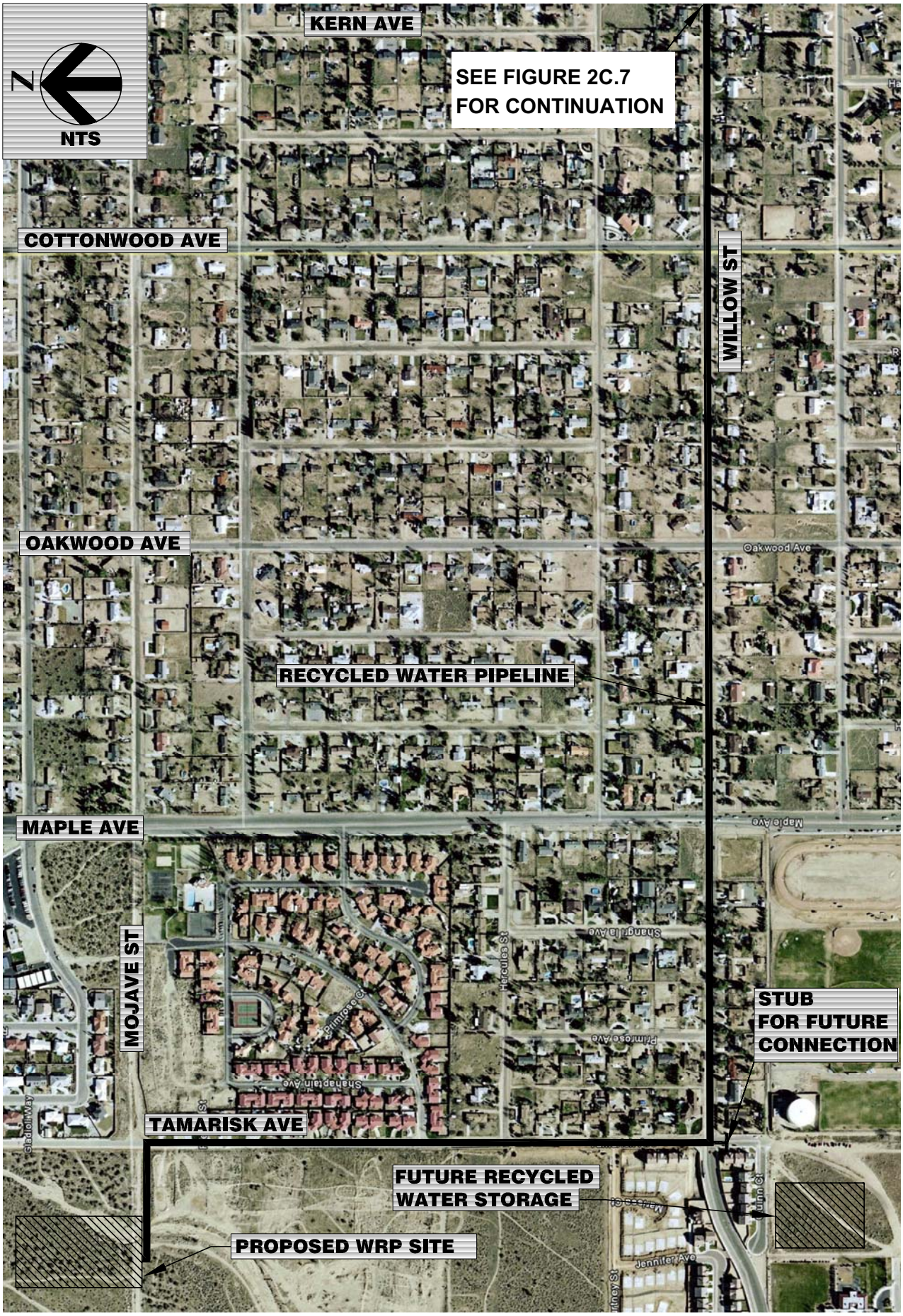

VICTOR VALLEY WASTEWATER RECLAMATION AUTHORITY
HESPERIA WRP - PRELIMINARY DESIGN REPORT

HDR

carollo

RECYCLED WATER LINE ALIGNMENT - PLAN 1

FIGURE 2C.6

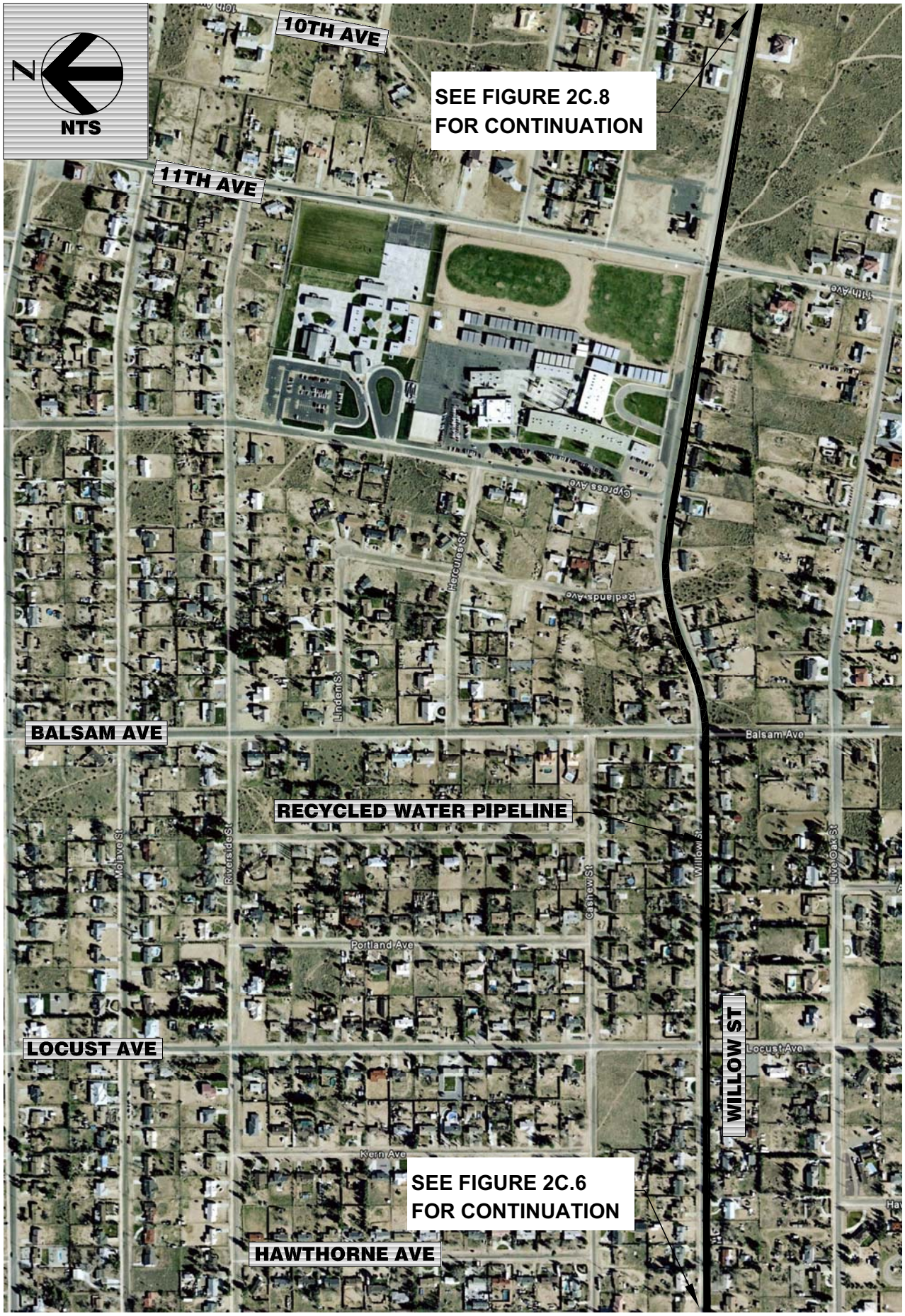

VICTOR VALLEY WASTEWATER RECLAMATION AUTHORITY
HESPERIA WRP - PRELIMINARY DESIGN REPORT

HDR

carollo

RECYCLED WATER LINE ALIGNMENT - PLAN 2

FIGURE 2C.7

VICTOR VALLEY WASTEWATER RECLAMATION AUTHORITY
HESPERIA WRP - PRELIMINARY DESIGN REPORT

HDR

carollo

RECYCLED WATER LINE ALIGNMENT - PLAN 3

FIGURE 2C.8

VICTOR VALLEY WASTEWATER RECLAMATION AUTHORITY
HESPERIA WRP - PRELIMINARY DESIGN REPORT

HDR

carollo

RECYCLED WATER LINE ALIGNMENT - PLAN 4

FIGURE 2C.9

VICTOR VALLEY WASTEWATER RECLAMATION AUTHORITY
HESPERIA WRP - PRELIMINARY DESIGN REPORT

HDR

carollo

RECYCLED WATER LINE ALIGNMENT - PLAN 4

FIGURE 2C.10

DESIGN INFORMATION MEMORANDUM NO. 3C

SITE AESTHETICS

Project Name:	Hesperia and Apple Valley Scalping WRPs, Raw Sewage Lift Station and Force Mains		
Client:	Victor Valley Wastewater Reclamation Authority	**Date:**	December 2009

INTRODUCTION AND PURPOSE

The proposed site for the Hesperia Raw Sewage Pump Station (Lift Station) is located in a subdivision southwest of the intersection of Maple Avenue and Mojave Street. The parcel is located adjacent to residential homes and a recreation area.

The purpose of this Design Information Memorandum (DIM) No. 3C is to evaluate the site aesthetic constraints on the proposed site, including building architecture, landscaping and site screening, odor control, noise abatement, and site security.

BUILDING ARCHITECTURE

The above-grade portion of the lift station building will be approximately 16 feet high to provide adequate clearance for mechanical equipment. The building will feature CMU split-faced block and a standing seam roof. Double doors will be provided for the pump room and an overhead door will be used for the generator room. During final design, the project Architect will develop a color scheme for approval by the City of Hesperia.

LANDSCAPING AND SITE SCREENING

The lift station site will be surrounded by a 6-foot high block wall. The entrance gate sized for vehicular entry will provide the only visible site view. No landscaping is currently proposed within the pump station site.

ODOR CONTROL

The proximity of the lift station to residential dwellings and recreational areas requires that potential odorous emissions be contained and conveyed to odor control facilities. A biofiltration odor control system is proposed to treat odorous emissions from the lift station wet well. A wood chip biofilter consisting of a 3-foot deep media bed with an air duct system that distributes the foul air below the media is recommended. The ventilation rate to handle the maximum expected air inflow and to provide for 6 air changes per hour (ACH) is approximately 750 cubic feet per minute (cfm). Biofilters consisting of wood chips typically have a surface loading rate of 3 to 4 cfm per square feet, which requires a surface area of 10-foot wide by 27-foot long. A sprinkler system is required to maintain the media optimum moisture level to enable microbes that remove hydrogen sulfide to perform adequately.

NOISE ABATEMENT

The noise generated by the lift station ventilation system and pumping equipment is relatively low and seldom noticeable at the property lines. However, we recommend placement of acoustical panels in the pump room and use of acoustical louvers for the building ventilation system. Another potential source of noise would be the standby generator when in operation. The standby generator can be located within the pumping station structure or outdoors in a hospital-rated noise enclosure.

SITE SECURITY

The lift station site will be provided with a perimeter fence and security gate. All doors will be equipped with silent intrusion alarms. Exterior convenience lighting will be provided, but will not include motion sensors.

FINAL DESIGN RECOMMENDATIONS

1. Lift station building to feature CMU split-faced block and a standing seam roof.

2. Perimeter fence to consist of a 6-foot high block wall.

3. Provide odor control using an in-ground type biofilter.

4. Include noise adsorption panels in the lift station and specify standby generator with a hospital-rated silencer.

5. Provide building intrusion alarms. During final design we will finalize the level of security required for the lift station. Based on economics and further discussions with VVWRA and the City of Hesperia, we may include video cameras to increase security.

DESIGN INFORMATION MEMORANDUM NO. 4C

ELECTRICAL POWER AND DISTRIBUTION

Project Name:	Hesperia and Apple Valley Scalping WRPs, Raw Sewage Lift Station and Force Mains		
Client:	Victor Valley Wastewater Reclamation Authority	**Date:**	December 2009

INTRODUCTION

The purpose of this Design Information Memorandum (DIM) No. 4C is to describe the preliminary basis of design for the electrical equipment for the Hesperia Raw Sewage Pump Station (Lift Station).

ELECTRICAL DESIGN LOADS

Table 4C.1 summarizes the anticipated lift station loads. The table describes the loads for each phase of the project.

Table 4C.1 Lift Station Electrical Loads
Hesperia Lift Station and Force Mains Design Information Memoranda
Victor Valley Wastewater Reclamation Authority, California

Phase	No. of Motors	Motor Size	Connected Load	Demand Load
1	2	40 hp	117A	117A
2	2	75 hp	216A	216A
3	3	75 hp	312A	312A

ELECTRICAL SYSTEM

Electrical Design Criteria

Site Power

480 VAC power to the site will be provided by an underground feed from Southern California Edison (SCE).

Motor Control Center (MCC)

The MCC will be installed in an electrical room. The design will be based on 2008 National Electrical Code (NEC). The details are as follows:

- The MCC will be rated: 277/480 volt, 3-phase, 3-wire, 42K amps, interrupting.
- Motor Control Center construction: NEMA 1 gasketed, 21" depth, tin plated copper buses.
- Lighting panels will be served by dry transformers. Both the dry transformer and the lighting panel will be integrated with the MCC.

Motor Control

- Phase 1: Two (2) 40-hp pumps with variable frequency drives (VFDs).
- Phase 2: Two (2) 75-hp pumps with VFDs.
- Phase 3: Three (3) 75-hp pumps with VFDs.

VFD Criteria: for motors 75 hp and above, 18-pulse. For motors less than 75 hp, 6 pulse with input and output reactors.

Conduit

- Dry areas: Galvanized rigid steel.
- Outdoors, wet areas and corrosive areas: PVC-coated galvanized rigid steel.
- Underground ducts: PVC schedule 40 encased in red slurry.

Wire

- Power; Thermoplastic type THHN/THWN.
- Instrument; Twisted shielded pair, 600 volt, Type TC; 16 gauge minimum.
- Data Cables; as required.

Lighting

- Indoor Areas: Fluorescent, electronic ballast, T8 lamp. Lighting levels appropriate for each occupancy or process area.
- Outdoor lighting for safety and process access. High Intensity Discharge (HID) Metal Halide lamp.

Standby Generator

A standby generator and Automatic Transfer Switch (ATS) will be installed to provide automatic standby power for the Hesperia Lift Station. During final design, we will determine if the lift station emergency power needs can be met by: 1) a dedicated emergency generator set, 2) the emergency generator set for the WRP, 3) providing a connection to a portable generator set, or 4) a combination of the above alternatives. The specified emergency generator set has to comply with air quality regulations.

Design Criteria

- Voltage: To match utility power, 277/480 volt, 3 phase, 3 wire, 60 Hz.
- Fuel: Diesel.
- Capacity: The standby generator will be capable of serving the Hesperia Lift Station maximum demand; 350 kW.
- Location: Hesperia Lift Station exterior.
- Day tank sized for 8-hour runtime.
- Sound attenuating outdoor enclosure.
- Critical exhaust silencer.

Equipment Description

The standby generator will be a diesel-fueled, concrete-pad mounted type with an external diesel fuel storage tank. Fuel capacity will be sized for 8 hours of operation at normal load. The generator will be connected to the lift station MCC through an ATS. When in automatic mode, the ATS will sense a utility power failure, start the standby generator, transfer load to the generator, and then will return the load to the utility service when utility power has become available and is stable. The ATS also provides automatic exercise programming for the generator.

Construction Materials

The standby generator will be specified with the necessary components needed for the application, such as an external fuel tank, a critical grade exhaust silencer, outdoor sound attenuated enclosure, and a block heater. Equipment will be standard manufacturer's models. The unit will meet all applicable local emissions requirements, including those for particulate emissions. The standby generator will either be installed on a mass concrete pad outdoors or indoors.

Control Description

The standby generator will be controlled by a solid state configurable controller in the ATS. There will be a number of configurable points, but the major points are four time delays as follows:

- Time delay to start generator after loss of utility power, typically 30 seconds.
- Time delay to transfer load to generator, typically 30 seconds.
- Time delay to transfer back to utility, typically 15 minutes.
- Time delay to stop generator for cool down, typically five minutes.

In addition, it will be possible to configure various exercise and test options for the standby generator such as weekly, bi-weekly, or monthly start-and-run with or without load transfer.

NOTES:

1. XX

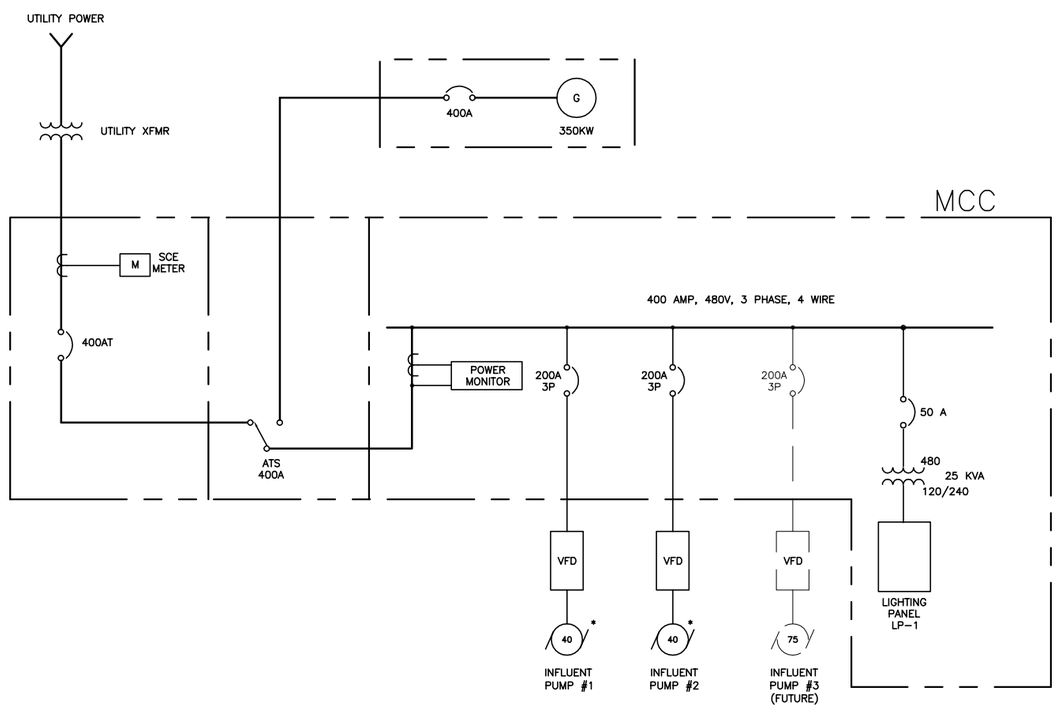

* IN PHASE 2, THESE MOTORS WILL INCREASE TO 75 HP. THE CIRCUIT BREAKERS, VFDS, GENERATOR, AND ATS ARE DESIGNED TO HANDLE A 75 HP LOADS.

SWITCHBOARD/MCC SINGLE LINE DIAGRAM

NTS

VICTOR VALLEY WASTEWATER RECLAMATION AUTHORITY
HESPERIA WRP - PRELIMINARY DESIGN REPORT

HDR

carollo

INFLUENT LIFT STATION - SINGLE LINE DIAGRAM

FIG. 4C-E001

NOTES:

1. XX

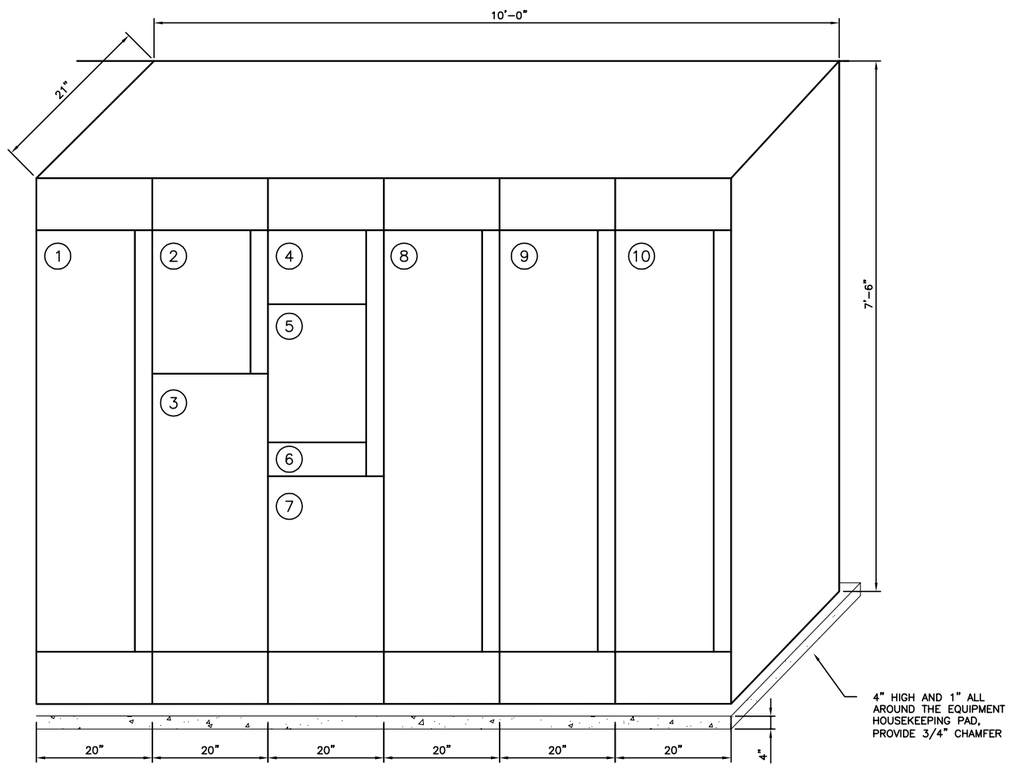

MCC ELEVATION

NTS

MCC		
ITEM	DESCRIPTION	REMARK
1	MCC PULL SECTION	
2	MAIN BREAKER	
3	ATS	
4	POWER METER	
5	LIGHTING PANEL	
6	XFMR FEEDER	
7	25 KVA TRANSFORMER	IZE 2 STARTER (1.6 mgd)
8	INFLUENT PUMP #1	VFD
9	INFLUEMT PUMP #2	VFD
10	INFLUENT PUMP #3	VFD

VICTOR VALLEY WASTEWATER RECLAMATION AUTHORITY
HESPERIA WRP - PRELIMINARY DESIGN REPORT

HDR

carollo

FIG. 4C-E002

DESIGN INFORMATION MEMORANDUM NO. 5C

INSTRUMENTATION AND CONTROLS

Project Name:	Hesperia and Apple Valley Scalping WRPs, Raw Sewage Lift Station and Force Mains		
Client:	Victor Valley Wastewater Reclamation Authority	**Date:**	December 2009

INTRODUCTION

The purpose of this Design Information Memorandum (DIM) No. 5C is to describe the preliminary instrumentation and controls (I&C) basis of design for the Hesperia Raw Sewage Pump Station (Lift Station).

INSTRUMENTATION AND CONTROLS (I&C) BASIS OF DESIGN

System Overview

The VVWRA employs a combination of Allen Bradley PLC 5/20E and SLC500 series Programmable Logic Controllers (PLCs) to monitor and control their existing lift stations. The PLCs communicate using Ethernet over a fiber optic backbone. A similar strategy is proposed for the Hesperia Lift Station.

Within a proposed control room, the operators will interface with the system using the Wonderware Human Machine Interface (HMI).

Instrumentation and Control

Purpose and Intent

The instrumentation and control (I&C) system will be designed to monitor and control the Hesperia Lift Station.

Design Criteria

- The PLC that will be used to monitor and control the Hesperia Lift Station will be the Allen Bradley (AB) PLC Model 5/20 E. VVWRA has standardized around this model PLC for all remote stations and in-plant controls. In addition, the existing Westside WRP operators and Information Technology (IT) staff have been trained in the maintenance, operation, and programming of the AB PLC 5/20E. Finally, the VVWRA keeps PLC 5/20 E spare Central Processing Units (CPUs) and input and output modules, both analog and digital. The software that will be used to program the AB PLC 5/20 E will be the RS LOGIX 5.
  - Allen Bradley 1771-A4B, 16-slot chassis
  - Allen Bradley 1785-L20B, PLC 5/20E controller, 16k RAM, supporting TCP/IP Ethernet communications
  - Allen Bradley 1771-IL, Analog Input Module, 8 Isolated Inputs, 4-20 mA

  - Allen Bradley 177-OFE2, Analog Output Module, 4 / 4-20 mA Outputs
  - Allen Bradley 1771-IA16, 16 channel AC Input Module
  - Allen Bradley 1771-OAD, 16 channel AC Output Module
  - Allen Bradley 1771-P7, Power Supply, Rack Mount, 2.88 A @ 24 VDC
- The HMI will provide the operator with the ability to monitor and control local processes in the field using the Allen Bradley Panelview Plus 1000. Similar to the AB PLC 5/20 E, the VVWRA has standardized around this model of local HMI and use them in conjunction with the AB PLC 5/20 E at the field PLC cabinets. The operations and IT staff own a copy of RS View, the Panelview software tool, and can program and configure the Panelview.
  - Allen Bradley 2711-K10C4B2 Panel View 1000+, Ethernet and RS 232(DH-485), Communication & RS-232 port
- The PLCs will communicate with the central control room using Ethernet protocol over fiber. Typically, the PLC and local HMI will connect to an Ethernet switch. A 10/100 MBPS Ethernet to fiber optic converter will also connect to the switch and allows the PLC to be placed on the network.
  - Ethernet to Fiber Optic Converter: (N-TRON 509FX)
  - Ethernet Switch: HP Procurve 1700-8
- The design will include the following instruments:
  - Electromagnetic flowmeter
  - Pressure indicating transmitters
  - Gauges, and non-mercury filled switches
  - Ultrasonic level indicating transmitter
  - Non-Mercury filled level switches.

Preliminary Control Strategies

General Description

The Hesperia Lift Station will pump raw wastewater to the remote Hesperia WRP screening facility. Pump operation will be automatic based on level sensors and level switches provided in the pump station wet well. A flow meter will measure the pump station discharge to the screening facility.

Local Control

When the Hand-Off-Auto (HOA) switch located at the MCC is placed into the Hand Mode, the pump VFDs will turn on. Once the VFDs are on, the operator can modulate the VFDs speed using the local potentiometers.

Automatic Control

Computer-Manual. When the Hand-Off-Auto (HOA) switch located at the MCC is placed into the Automatic Mode and the HMI is in Manual Mode, the operator may call the VFD On or Off from the local HMI. The operator may also vary the VFD speed via the local HMI.

Computer-Auto. When the Hand-Off-Auto (HOA) switch located at the MCC is placed into the Automatic Mode and the HMI is in Auto Mode, the PLC calls or drops the VFDs based on wet well levels. The PLC is programmed with a PID algorithm to modulate the VFD speeds to maintain wet well level.

Alarms

The following conditions will trigger alarms at the PLC:

- VFD fail
- High discharge pressure
- Power fail

Instrumentation and Process Diagrams

The preliminary process and instrumentation diagrams are included at the end of this DIM No. 5C.

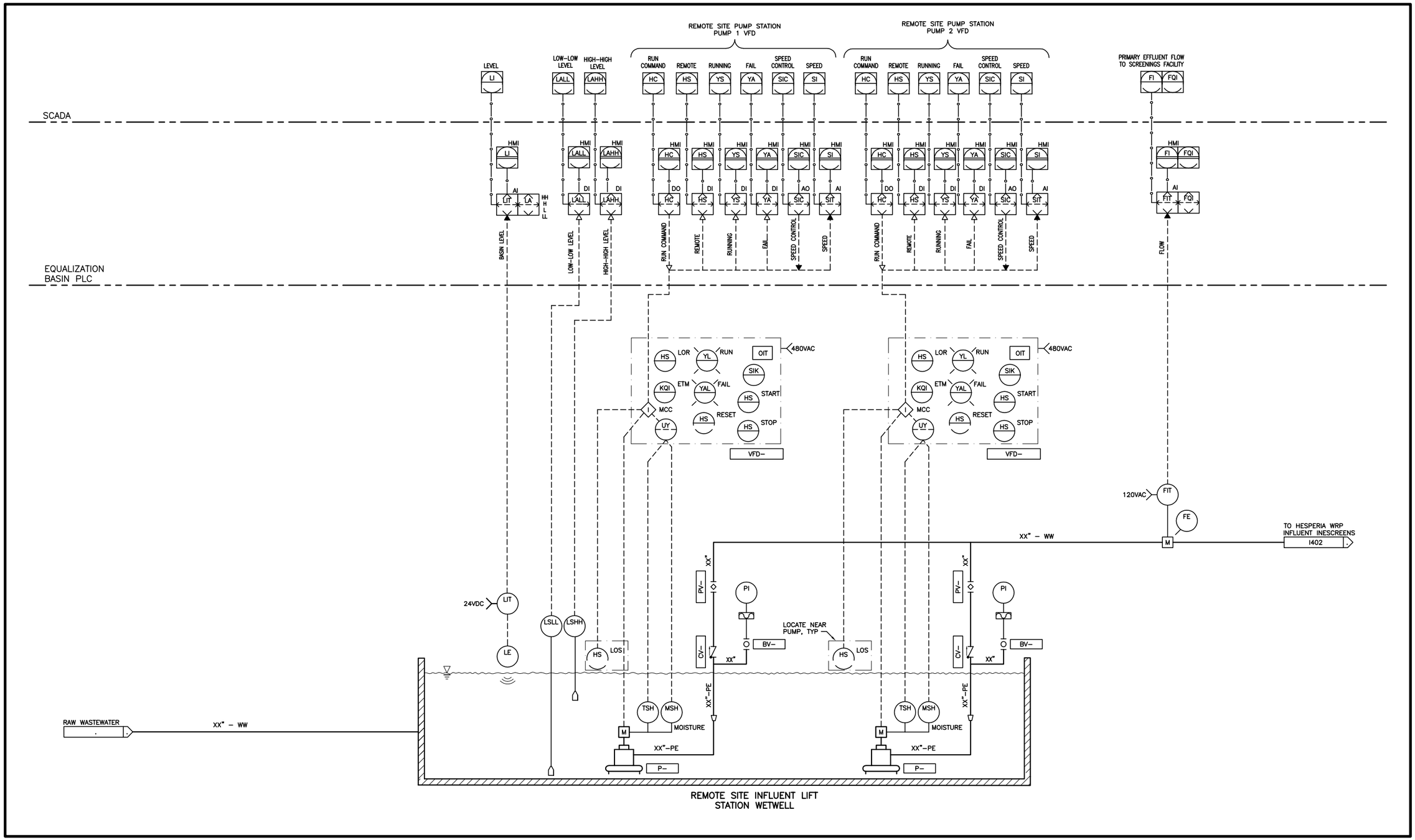

VICTOR VALLEY WASTEWATER RECLAMATION AUTHORITY
HESPERIA WRP - PRELIMINARY DESIGN REPORT

HDR

carollo

INFLUENT LIFT STATION

FIG. 5C-I201

HESPERIA WATER RECLAMATION PLANT

DESIGN INFORMATION MEMORANDUM NO. 6C

FACILITIES SITING

Project Name:	Hesperia and Apple Valley Scalping WRPs, Raw Sewage Lift station and Force Mains		
Client:	Victor Valley Wastewater Reclamation Authority	**Date:**	December 2009

INTRODUCTION AND PURPOSE

The City of Hesperia Recycled Water Master Plan identified potential sites to locate the City's Water Reclamation Plants (WRP) and concepts to supply wastewater to the WRP and to distribute recycled water produced by the WRPs. As part of the WRP Preliminary Design effort, Victor Valley Wastewater Reclamation Authority (VVWRA), the City of Hesperia, and Carollo/HDR conducted workshops to determine the project design criteria, facilities layout, architectural treatment, and the potential long-term benefits of locating the WRP at an alternative location. VVWRA requested that the Carollo/HDR team evaluate the benefits of locating the WRP to the east side of Interstate Highway 15, closer to the lift station site and to future recycled water users. This Design Information Memorandum summarizes our findings ad recommendations regarding the location of the WRP and the associated wastewater collection and conveyance facilities required to supply wastewater to the WRP and to recycle or dispose of the WRP treated effluent.

FACILITIES LOCATION

Alternative A – WRP West of Interstate Highway 15

In the original concept, the lift station required to divert and convey wastewater to the WRP would be located near the intersection of Mauna Loa Road and Maple Avenue. At the initial stage, the lift station will use a single force main to convey an average flow of 1.0 million gallons per day (mgd) to the WRP. It was anticipated that at a later date, the lift station capacity would be increased from 1.0 mgd to 4.0 mgd average flow and that a second parallel force main would be added to handle the future design flow.

The WRP would be located west of Interstate Highway 15 (I-15) and north of Main Street, as shown on Figure 6C.1. The City of Hesperia would be responsible for the recycled water distribution, and it is anticipated that treated effluent exceeding landscape irrigation demands would be 1) disposed at percolation ponds located in the vicinity of the WRP and 2) in the future, receive further treatment to allow its use for other potential recycle water uses.

Lift Station Location

Under Alternative A, the lift station would be located in the empty parcel at the corner of Mauna Loa Road and Maple Avenue. Wastewater would be diverted from the 12-inch diameter gravity line in Maple Street to the lift station wet well. The diversion sewer would be about 80 feet long and 9 feet deep.

Force Main Alignment

The Hesperia lift station would deliver raw sewage from the intersection of Maple Avenue and Mauna Loa Street to the Hesperia WRP located approximately three miles southwest of the station. Two prominent features that will require being crossed are the State Water Project (SWP) Aqueduct and I-15.

The proposed alignment wastewater force main has a significant impact on the pump station design due to the length of the line and associated friction losses. The force mains will consist of a 12-inch diameter pipeline to handle flows up to 2 mgd and a future 12-inch diameter force main used in conjunction with the initial force main to convey the ultimate 4.0 mgd flow.

Design Constraints

The following items were identified as to potentially posing constraints in determining the alignment for the wastewater force main under Alternative A.

1. Utilities – The number of existing utilities and their placement within rights-of-way will impact the proposed alignment for the force main. Adequate separation will be required from any potable water lines, as well as appropriate clearances from other utilities to allow for proper installation.
2. Rights-of-Way – Installation of the sewage force main is allowed longitudinal in rights-of-way with the exception of freeways, where frontage roads or parallel roads share the rights-of-way with a freeway. Utility placement is allowed outside of the restricted access portion of the freeway. This means that Amargosa Road and Mariposa Road, which parallels I-15, should be available to accommodate the force main.

   The most direct routes to the WRP do not appear to have dedicated rights-of-way for the entire force main alignment. Widths of existing rights-of-way are also of concern to allow for installation of the new pipelines while maintaining necessary horizontal separation from existing utilities. The ability to obtain easements may influence the final force main route and SWP Aqueduct crossing location.
3. Interstate 15 Crossing – The California Department of Transportation (Caltrans) Encroachment Permits Manual provides guidelines for the traversing of state transportation rights-of-way. Chapter 6 of the manual, Utilities Permits, covers requirements for utility crossings, with any variations required from the guidelines handled per Chapter 3, Exceptions to Policy. For pipelines that convey sewage, encasements are required. The minimum depth of cover varies according to the size of the casing pipe, with at least 10 feet of cover required for the proposed casing to be installed with a 12-inch diameter force main and 15 feet of cover for the proposed casing associated with an 18-inch diameter force main. Caltrans prefers perpendicular crossings of their rights-of-way, but accepts variations up to 30 degrees from perpendicular. For angles in excess of 30 degrees, an exception to policy is required from Caltrans Division of Design. Adequate explanation and justification of the crossing would be needed to obtain their approval.
4. SWP Aqueduct Crossing – The California Department of Water Resources (DWR) has indicated that any pipeline containing a hazardous material (per their definition, wastewater meets this criteria) is required to be encased and jacked and bored (or other trenchless technology method) a minimum of 25 feet below the aqueduct. The previous practice of allowing the installation of pipes in a casing pipe on a bridge or overchute for

these substances is no longer allowed. DWR prefers perpendicular crossing of the aqueduct, although the permit guidelines do not specifically discuss acceptable variances. Adequate reasoning for a proposed deviation from perpendicular would be required in the permit application.

Force Main Routing Alternatives

As the crossing of I-15 requirements do not vary within the area of interest for this project, the major factors in determining the best routing for the force main are right-of-way constraints and the crossing of the SWP Aqueduct. Initially, we indentified six force main alignments and selected three possible alignments for further evaluation. The alignments are shown in Figure 6C.2, and the ones selected for further evaluation are:

1. FM Alternative 1 – Minimize Boring Costs and Force Main Length – SWP Aqueduct crossing near Oro Grande Wash using jack and bore.
2. FM Alternative 2 – Minimize New Right-of-Way Easements – SWP Aqueduct crossing at Mariposa Road using directional drilling.
3. FM Alternative 3 – Single Boring – Crossing of I-15 and SWP Aqueduct using directional drilling.

Table 6C.1 summarizes the general characteristics of the three alternatives.

Table 6C.1 Summary of Alternatives
Hesperia Lift Station and Force Mains Design Information Memoranda
Victor Valley Wastewater Reclamation Authority, California

Description of Characteristic	FM Alternative 1	FM Alternative 2	FM Alternative 5
Force Main Length	15,300	18,200	15,600
Casing Pipe Length			
I-15	350 feet	350 feet	350 feet
Aqueduct	500 feet	900 feet	500 feet
Trenchless Technology Method			
I-15	Jack & Bore	Jack & Bore	Jack & Bore
Aqueduct	Jack & Bore	Directional Drilling	Jack & Bore/ Directional Drilling
Right-of-Way Acquisition Requirements	High	Low	High
Estimated Construction Cost	$3,800,000	$4,700,000	$4,100,000

Recommended Force Main Routing

Alternative 1 is the recommended alignment for the sewage force main for the following reasons:

1. Shortest force main length;
2. Least challenging for construction;
3. Lowest operating lift station head requirements;

The estimated total cost to implement Alternative 1 may be higher because this alignment requires more easements than Alternatives 2 and 5.

Wastewater Pumping Requirements

We estimated the cost to pump wastewater from the lift station to the WRP site assuming that the force main follows the alignment described as Alternative Alignment 1. The estimated annual cost to pump 1.0, 2.0, and 4.0 mgd of wastewater to the proposed WRP is $84,000, $214,300, and $429,000, respectively.

Alternative B – WRP East of Interstate Highway 15

Following VVWRA's suggestion to relocate the WRP to the east side of Interstate Highway15, the City of Hesperia identified potential sites to accommodate the lift station and the WRP. Both sites are relatively close to the intersection of Maple Avenue and Mauna Loa Road, which was identified by the City of Hesperia Recycled Water Master Plan as the best location to divert wastewater to the lift station for conveyance to the WRP. The general layout of Alternative B is shown in Figure 6C.3.

Lift station location for Alternative B would involve a 550-foot-long gravity sewer used to divert flow to the lift station wet well. The lift station would use a 1,500-foot-long force main to convey wastewater to the new WRP as shown in Figure 6C.4.

Force Main Routing

Under Alternative B, the wastewater force main will be located within the Mojave Street right-of-way.

Wastewater Pumping Requirements

Under Alternative B, the estimated annual cost to pump 1.0, 2.0, and 4.0 MDG of wastewater to the proposed WRP is $12,000, $20,000, and $40,000, respectively.

Economic Comparison of WRP Site Alternatives

Table 6C.2 summarizes the cost to collect and convey raw wastewater to the proposed WRP.

Table 6C.2 Economic Comparison - WRP Siting(1), Dollars
Hesperia Lift Station and Force Mains Design Information Memoranda
Victor Valley Wastewater Reclamation Authority, California

Alternative	A(2)	B(3)
Gravity Sewer from Collection System to Lift Station Wet Well	$25,000	$140,000
Force Main between Lift Station and WRP	$3,800,000	$150,000
Total Capital Cost	$3,825,000	$290,000
Annual Cost of Pumping 1.0 mgd Wastewater to WRP(1)	$84,000	$12,000

Notes:
(1) Economic comparison assumes that the lift station and WRPs are the same regardless of location.
(2) Alternative A – Assumes that the WRP will be located west of Interstate Highway 15.
(3) Alternative B – Assumes that the WRP will be located east of Interstate Highway 15.

As indicated previously, Alternative A assumes that the lift station would be located near the intersection of Mauna Loa Road and Maple Avenue and would require a 15,300-foot-long wastewater force main crossing the Interstate Highway 15 and the California Aqueduct. As shown in Table 6C-1, the total capital cost associated with the WRP influent sewer and force main for Alternative A is approximately $3, 825,000. The estimated annual energy cost of pumping an average flow of 1.0 mgd is $84,000. The present worth of Alternative A using the capital cost plus the cost of pumping for a 20-year period, assuming a 2 percent energy cost escalation and a discount rate of 4.5 percent is $5,200,000. Alternative B also assumes that the lift station is located near the intersection of Mauna Loa Road and Maple Avenue and that the WRP would be located about 1,500 feet east of the lift station site. As shown in Table 6C-1 the cost of wastewater collection and conveyance to the WRP is about $300,000. The annual cost of energy associated with pumping is about $12,000, On this basis, the present worth of the capital cost and the cost of pumping for a period of 20 years, using a 2 percent escalation for energy cost and a 4.5 percent discount rate, is $500,000.

WRP Siting Recommendations

Based on the simplified economic analysis presented above, we recommend that the WRP and lift station be located as described in Alternative B for the following reasons:

1. The simplified present worth analysis shows a significant economic advantage of Alternative B ($500,000) over Alternative A ($5,200,000).
2. Alternative B does not involve crossing Interstate Highway 15 and the California Aqueduct.
3. The cost associated with right-of way acquisitions is significantly reduced because Alternative B facilities are located in public right-of-way.
4. The recommended WRP site is closer to potential recycled water users.
5. The savings realized by implementing Alternative B could be used by the City of Hesperia to construct the backbone of the future recycled water distribution system and to use the recycled water pipeline to dispose in percolation ponds treated effluent not used for landscape irrigation. The estimated cost of the six-mile-long recycled water pipeline is $3,470,000.

VICTOR VALLEY WASTEWATER RECLAMATION AUTHORITY
HESPERIA WRP - PRELIMINARY DESIGN REPORT

HDR

ALTERNATIVE A – WRP WEST OF INTERSTATE HIGHWAY 15

FIG. 6C-1

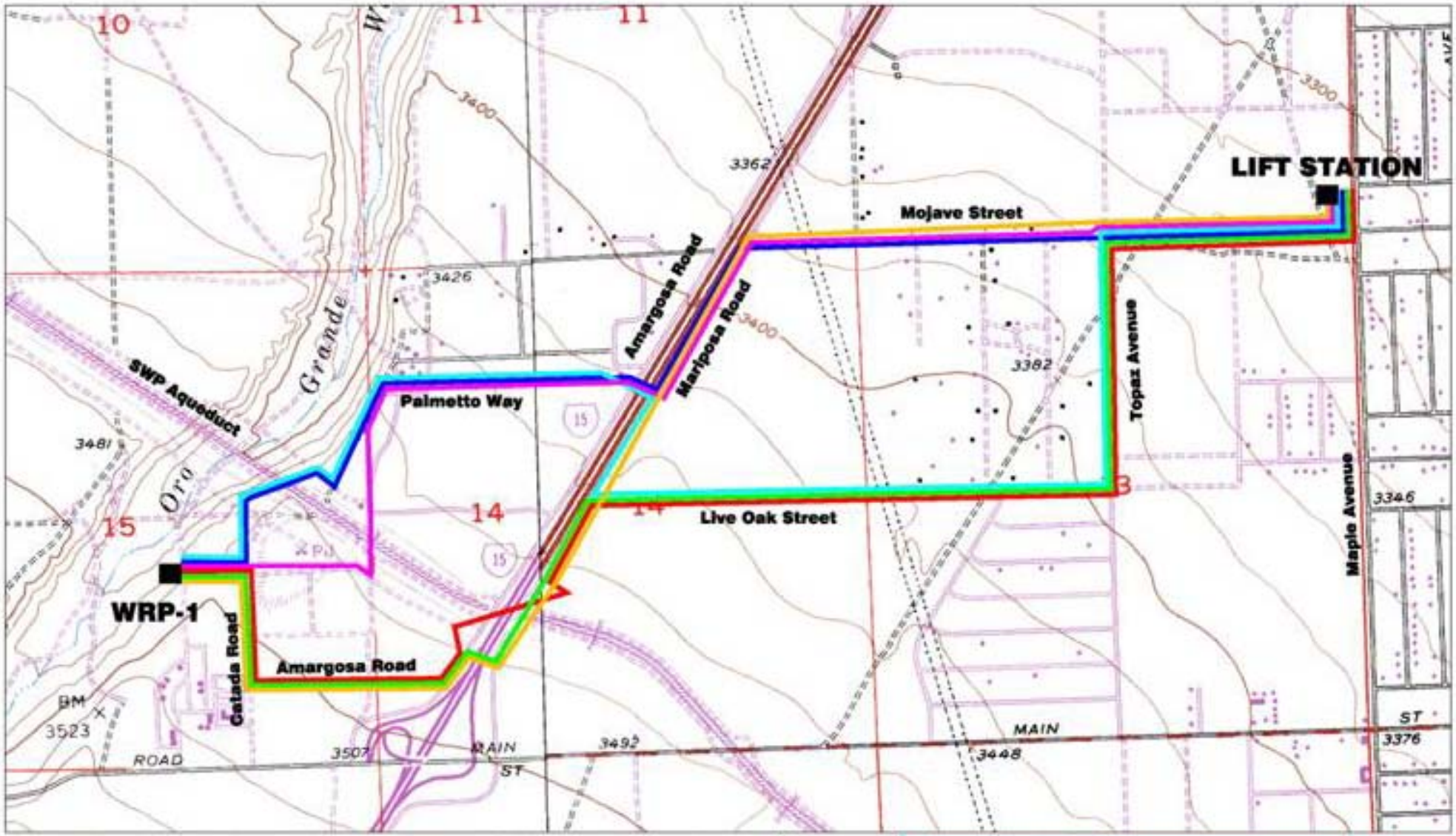

ALTERNATIVE 1
ALTERNATIVE 2
ALTERNATIVE 3
ALTERNATIVE 4
ALTERNATIVE 5
ALTERNATIVE 6

HDR

Hesperia Lift Station and Force Main Alignment Alternatives

DATE

FIGURE

FIG. 6C-2

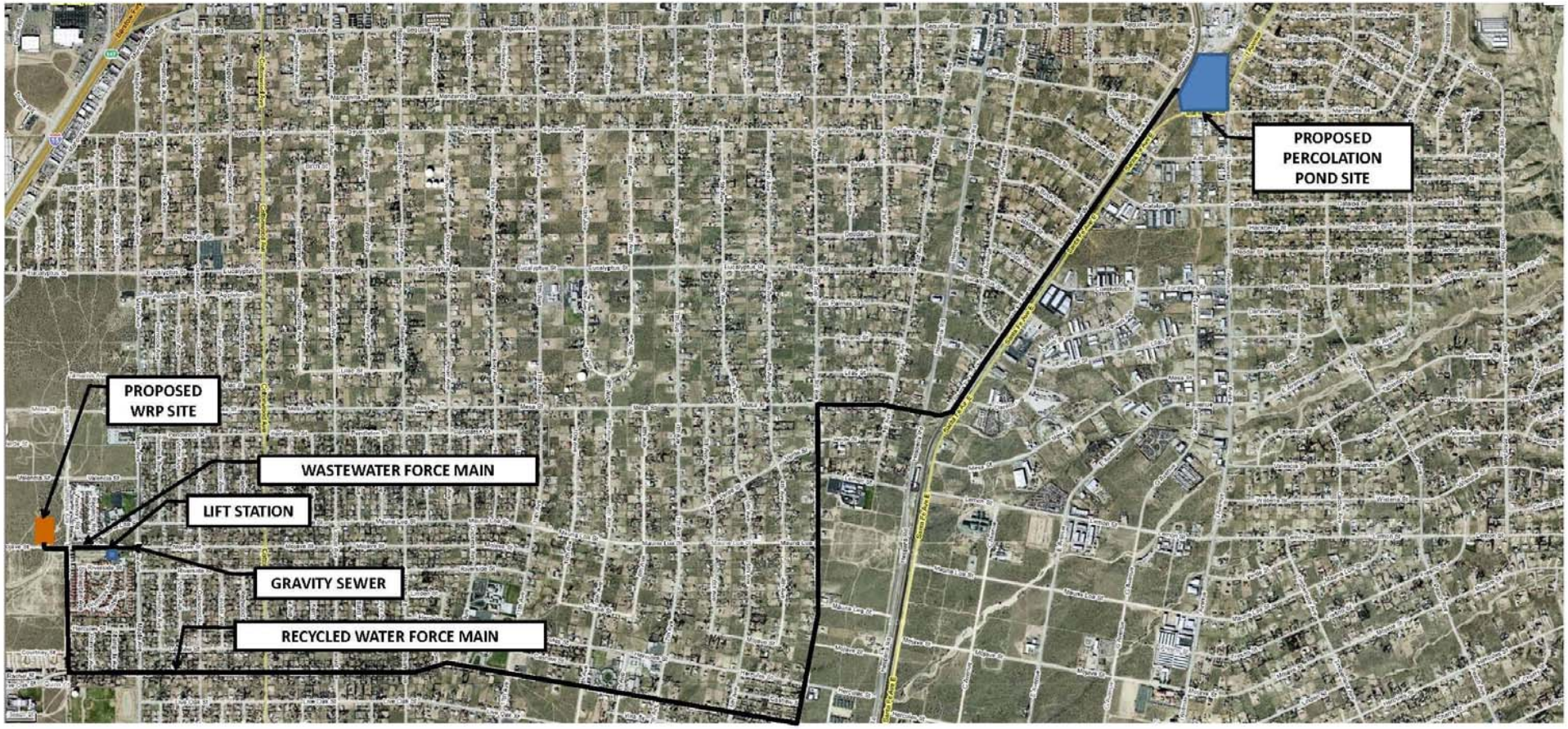

VICTOR VALLEY WASTEWATER RECLAMATION AUTHORITY
HESPERIA WRP - PRELIMINARY DESIGN REPORT

HDR

ALTERNATIVE B – WRP EAST OF INTERSTATE HIGHWAY 15

FIG. 6C-3

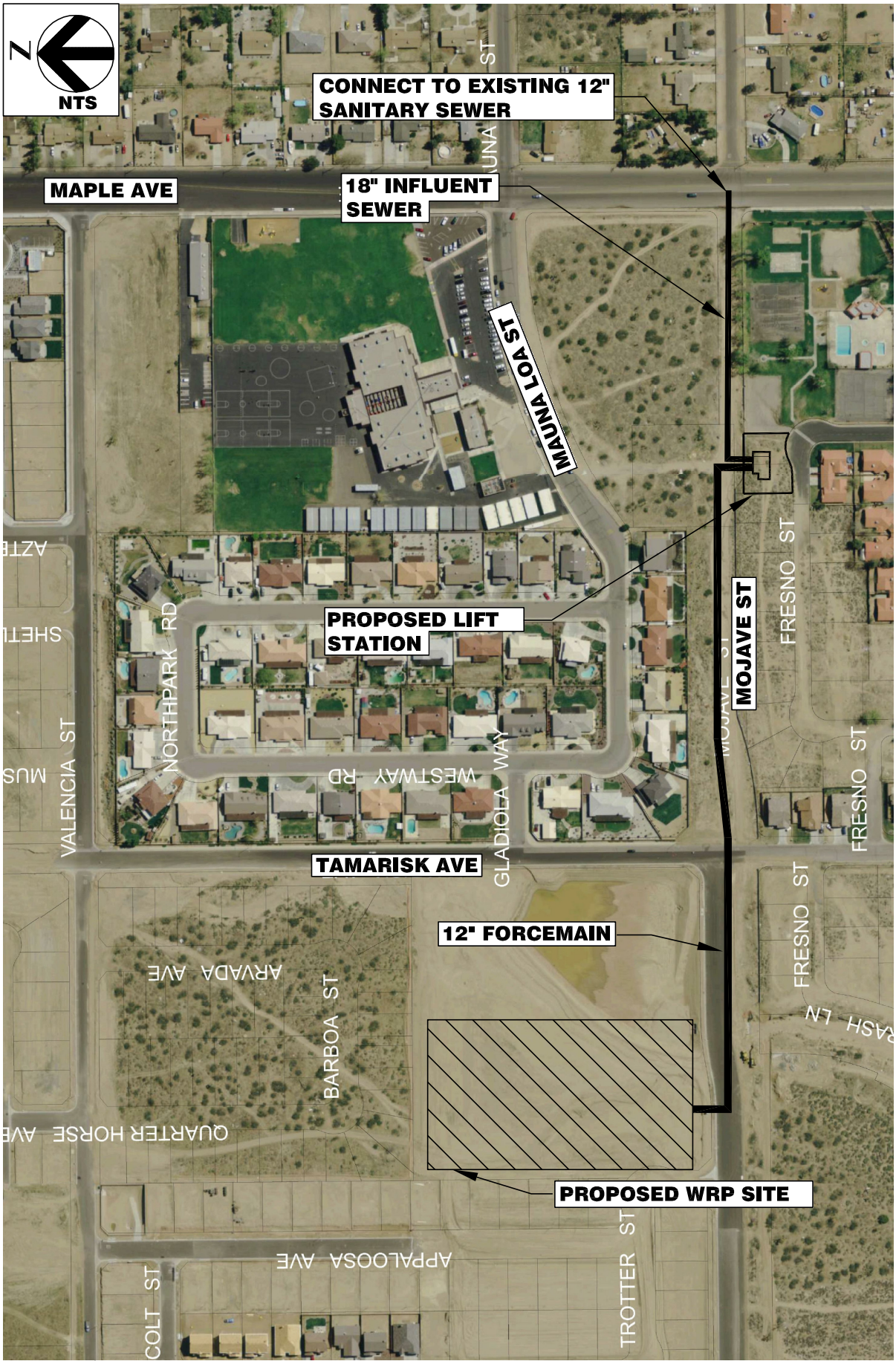

VICTOR VALLEY WASTEWATER RECLAMATION AUTHORITY
HESPERIA WRP - PRELIMINARY DESIGN REPORT

carollo HDR

LIFT STATION LOCATION MAP

FIGURE 6C-4